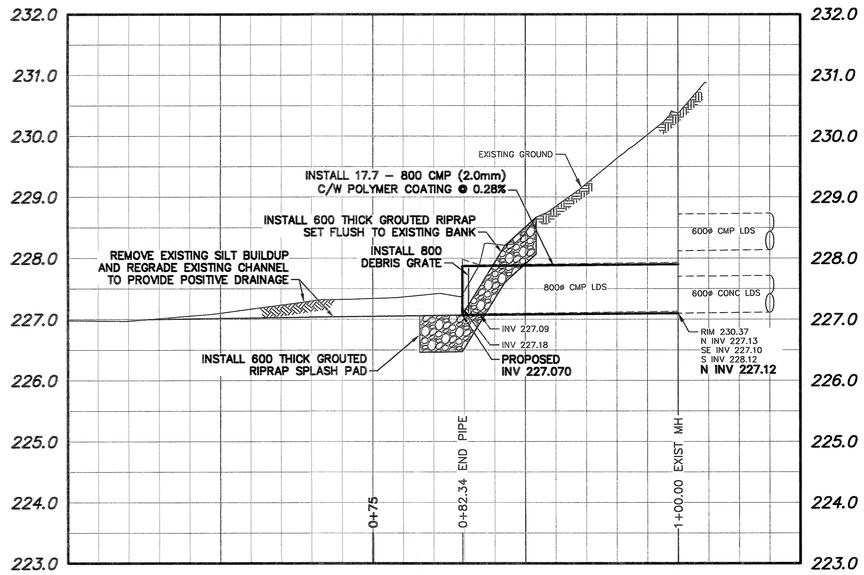

NOTE: CHAINAGES SHOWN ARE ALONG ℄ OF OUTFALL

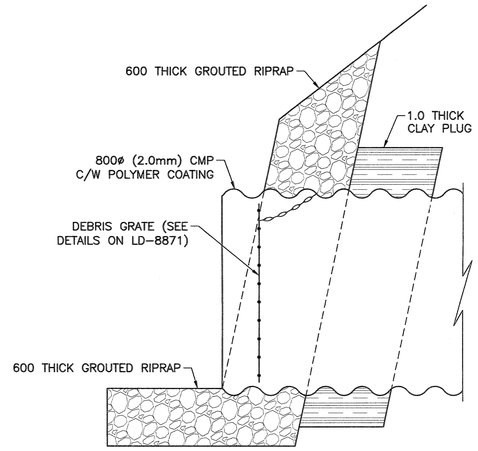

END SECTION DETAIL
SCALE: N.T.S.

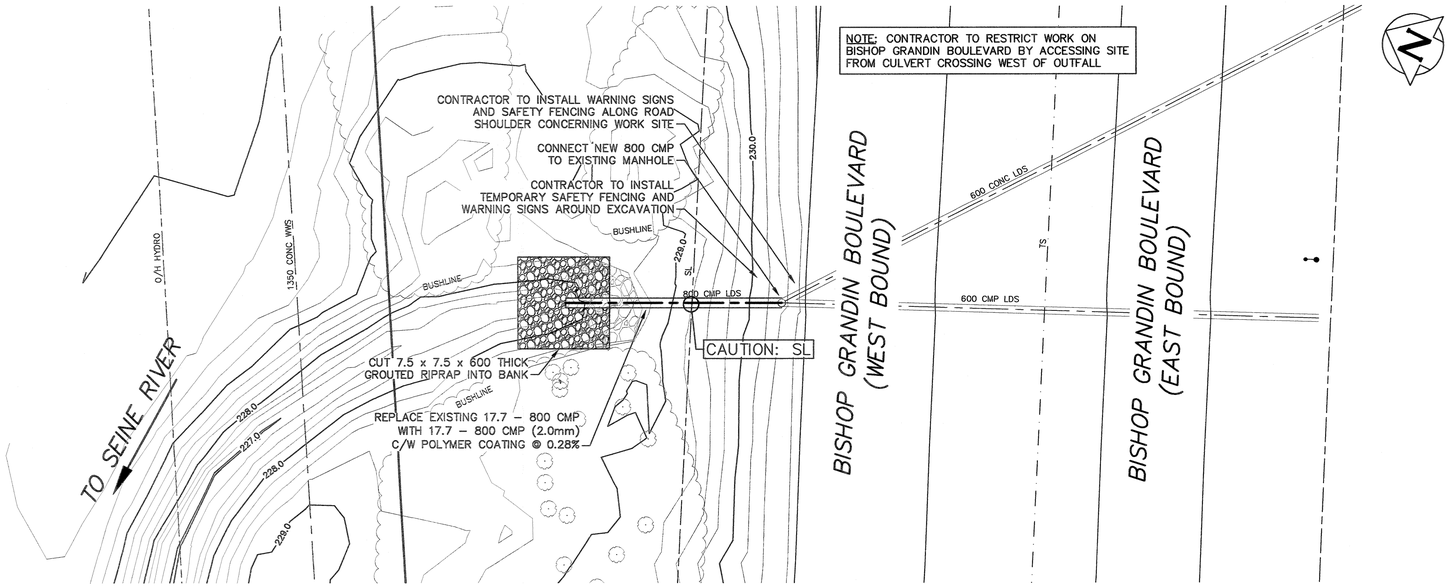

NOTES:

1. ALL EXCAVATED MATERIAL WITHIN 107.0 OF THE REGULATED SUMMER RIVER LEVEL (RSRL) MUST BE REMOVED FROM SITE (NO STOCK PILING).
2. REMOVE AND REPLACE TREES AS DIRECTED BY CONTRACT ADMINISTRATOR.
3. CONTRACTOR TO EXPOSE ALL UTILITIES BEING CROSSED PRIOR TO EXCAVATING.
4. CONTRACTOR TO INSTALL TEMPORARY SAFETY FENCING AROUND EXCAVATION.
5. CMP TO MANHOLE CONNECTION TO BE 150 REINFORCED CONCRETE COLLAR IN CONJUNCTION WITH WATER–STOP GROUT RING.

PROPERTY LIMITS DELINEATION

DELINEATION OF PROPERTY LIMITS AS SHOWN ON THIS DWG DOES NOT REPRESENT A "LEGAL SURVEY". KGS GROUP MAKES NO REPRESENTATION OR WARRANTY AS TO THE ACCURACY OF PROPERTY LIMITS DELINEATED ON THIS DWG, NOR ON THE DIMENSIONAL ACCURACY OF DWG FEATURES RELATIVE TO THOSE PROPERTY LIMITS.

ENGINEERS GEOSCIENTISTS MANITOBA
Certificate of Authorization
KGS Group
No. 245

METRIC
WHOLE NUMBERS INDICATE MILLIMETRES
DECIMALIZED NUMBERS INDICATE METRES

0.0 5.0 10.0 15.0 20.0 25.0

WARNING

IF POWER EQUIPMENT OR EXPLOSIVES ARE TO BE USED FOR EXCAVATION ON THIS PROJECT THE CONTRACTOR MUST:

1) NOTIFY THE GAS COMPANY OF THE PROPOSED LOCATION OF EXCAVATION.

2) TAKE PRECAUTION TO AVOID DAMAGE TO GAS COMPANY INSTALLATIONS.

SEE PROVINCIAL REGULATION 210/72 FOR DETAILS

LOCATION APPROVED
UNDERGROUND STRUCTURES

SUPV. U/G STRUCTURES COMMITTEE — DATE

NOTE:

LOCATION OF UNDERGROUND STRUCTURES AS SHOWN ARE BASED ON THE BEST INFORMATION AVAILABLE BUT NO GUARANTEE IS GIVEN THAT ALL EXISTING UTILITIES ARE SHOWN OR THAT THE GIVEN LOCATIONS ARE EXACT. CONFIRMATION OF EXISTENCE AND EXACT LOCATION OF ALL SERVICES MUST BE OBTAINED FROM THE INDIVIDUAL UTILITIES BEFORE PROCEEDING WITH CONSTRUCTION.

B.M.
ELEV.

NO.	REVISIONS	DATE	BY
0	ISSUED FOR TENDER	2018 11 21	RBO

KGS GROUP CONSULTING ENGINEERS

DESIGNED BY	NGV	CHECKED BY	RBO
DRAWN BY	GEL	APPROVED BY	RBO
SCALE: HORIZONTAL	1:250	RELEASED FOR CONSTRUCTION	
VERTICAL	1:50		
DATE	2018 11 20	DATE	Nov 20/18

PLOT DATE: 2018 11 20

ENGINEER'S SEAL
PROVINCE OF MANITOBA — 2018 10 18 — R.B. OFFMAN — Member 24701 — REGISTERED PROFESSIONAL ENGINEER

CONSULTANT DRAWING NUMBER
18–0107–013_LD–8869

BID OPPORTUNITY: 1042–2018
CONTRACT NUMBER:

Winnipeg

THE CITY OF WINNIPEG
WATER AND WASTE DEPARTMENT
ENGINEERING DIVISION

2019 OUTFALL RENEWAL REHABILITATION PROGRAM

BISHOP GRANDIN BOULEVARD OUTFALL

PLAN AND PROFILE
S–MA70015994

SHEET 13 OF 16

CITY DRAWING NUMBER
LD–8869

FILE PATH: P:\Projects\2018\18–0107–013\Dwg\Mun\
FILE NAME: 18–0107–013_PP.dwg