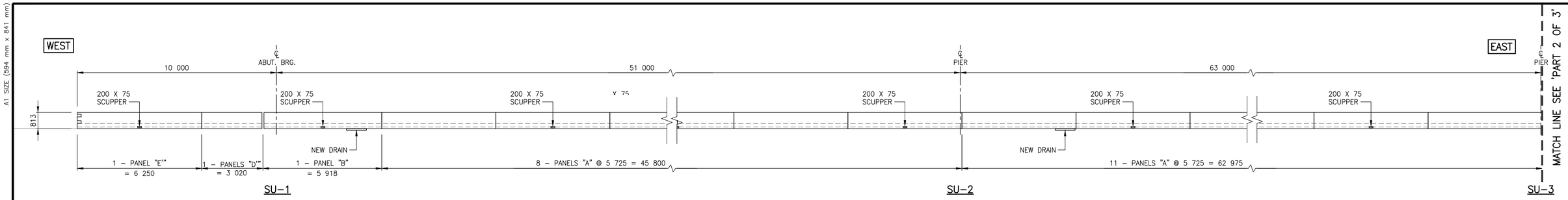

TRAFFIC BARRIER LAYOUT – PART 1 OF 3

(ELEVATION LOOKING NORTH)
SCALE 1:100

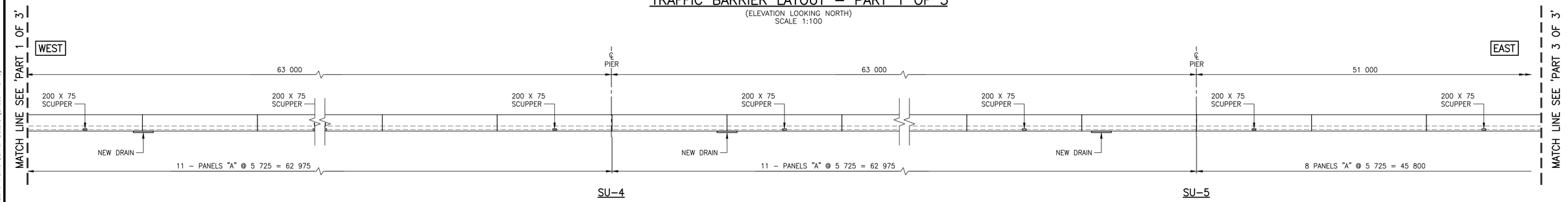

TRAFFIC BARRIER LAYOUT – PART 2 OF 3

SCALE 1:100

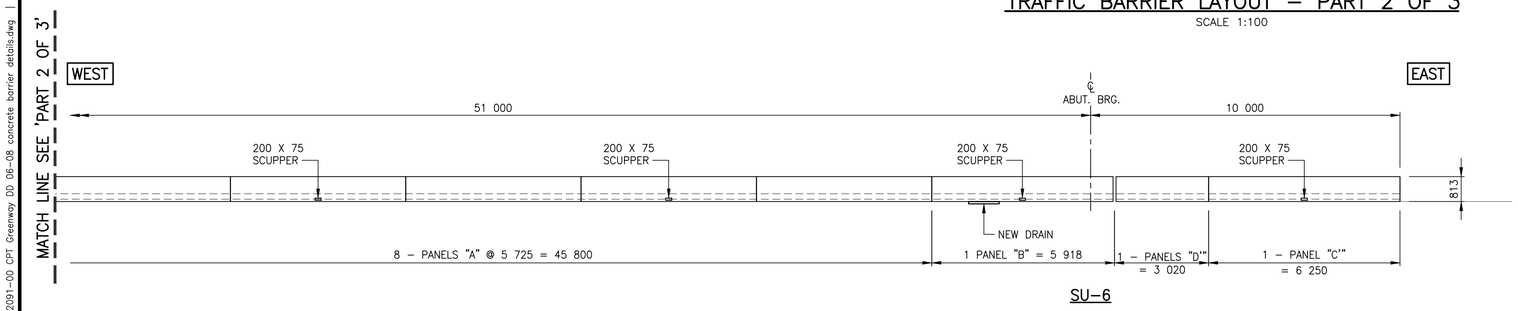

TRAFFIC BARRIER LAYOUT – PART 3 OF 3

SCALE 1:100

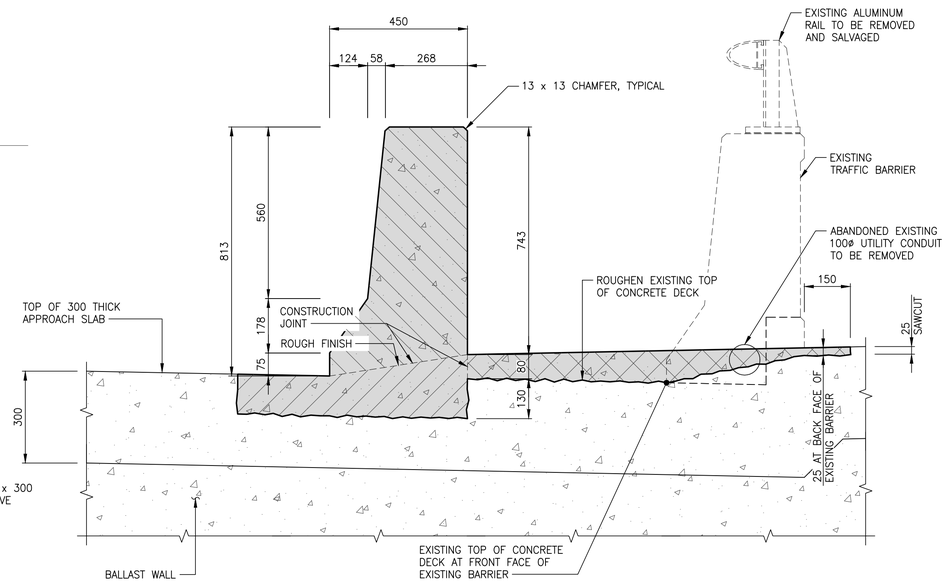

TRAFFIC BARRIER AT ABUTMENT DETAIL

SCALE 1:10

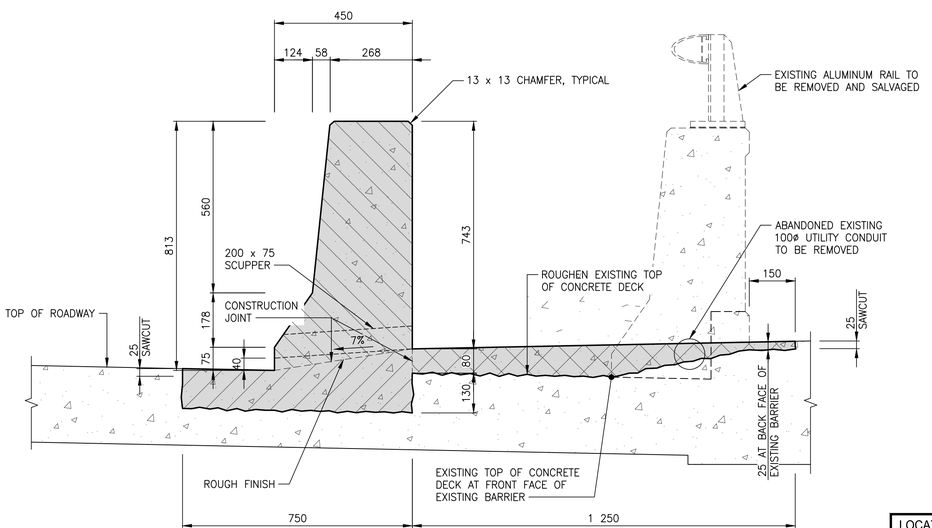

TYPICAL TRAFFIC BARRIER DETAIL

SCALE 1:10

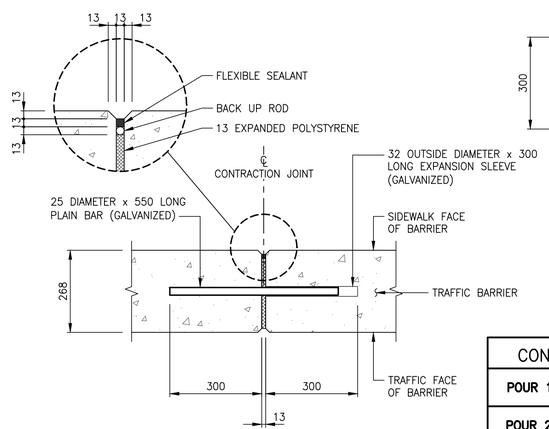

BARRIER JOINT DETAIL

SCALE 1:10

CONCRETE POUR SEQUENCE	
POUR 1	
POUR 2	
POUR 3	

METRIC
WHOLE NUMBERS INDICATE MILLIMETRES
DECIMALIZED NUMBERS INDICATE METRES

NOTE:
These design documents are prepared solely for the use by the party with whom the design professional has entered into a contract and there are no representations of any kind made by the design professional to any party with whom the design professional has not entered into a contract.

ENGINEERS GEOSCIENTISTS MANITOBA
Certificate of Authorization
WSP Canada Group Limited
No. 6657

LOCATIONS APPROVED UNDERGROUND STRUCTURES

SIGNED BY: _____ DATE
SUPV U/G STRUCTURES

LOCATION OF UNDERGROUND STRUCTURES AS SHOWN ARE BASED ON THE BEST INFORMATION AVAILABLE BUT NO GUARANTEE IS GIVEN THAT ALL EXISTING UTILITIES ARE SHOWN OR THAT THE GIVEN LOCATIONS ARE EXACT CONFIRMATION OF EXISTANCE AND EXACT LOCATION OF ALL SERVICES MUST BE OBTAINED FROM THE INDIVIDUAL UTILITIES BEFORE PROCEEDING

G.B.M. = -
ELEV. = -

No.	REVISIONS	DATE	BY
0	ISSUED FOR TENDER	18.02.23	JL

WSP Canada Group Limited
93 Lombard Avenue, Suite 111
Winnipeg MB R3B 3B1
T+ 1 204-943-3178
F+ 1 204-943-4948
www.wsp.com

DESIGNED BY	BB	CHECKED BY	WC
DRAWN BY	FD	APPROVED BY	JL
HOR. SCALE	AS NOTED	RELEASED FOR CONSTRUCTION	
VERTICAL	AS NOTED		
DATE	18.02.23	DATE	

ENGINEER'S SEAL
PROVINCE OF MANITOBA
R.B. BOWLES
MEMBER 34037
REGISTERED PROFESSIONAL ENGINEER
Feb 23 2018

CONSULTANT ACAD DWG. No.
17M-02091-00-S-6

Winnipeg
THE CITY OF WINNIPEG
PUBLIC WORKS DEPARTMENT
ENGINEERING DIVISION

CHIEF PEGUIS TRAIL - GREENWAY EXTENSION
KILDONAN SETTLERS BRIDGE MODIFICATIONS

TRAFFIC BARRIER DETAILS (SHEET 1 OF 3)

CITY DRAWING NUMBER: B216-18-06
SHEET 6 OF 26
BID OPPORTUNITY NUMBER: 4-2018

A1 SIZE (594 mm x 841 mm)

Plotted: February 22, 2018 at 12:57:45 PM | Last saved by: davidf
File: p:\2017\17m-02091-00 – professional consulting services for chief peguis greenway extension from main street to henderson highway\WSP DWG\structural\17M-02091-00 CPT Greenway DD 06-08 concrete barrier details.dwg | Layout: 6 Traffic Barrier Details (Sheet 1 of 3)