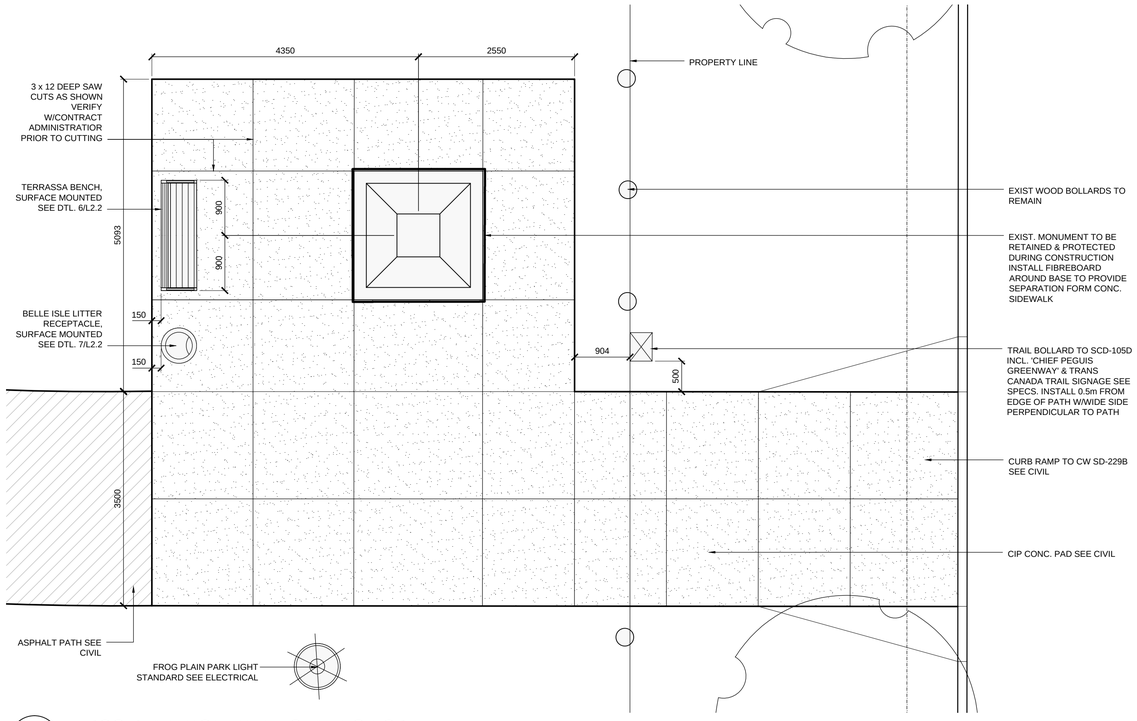

1 L2.1 FROG PLAIN MONUMENT SEATING NODE

SCALE 1:50

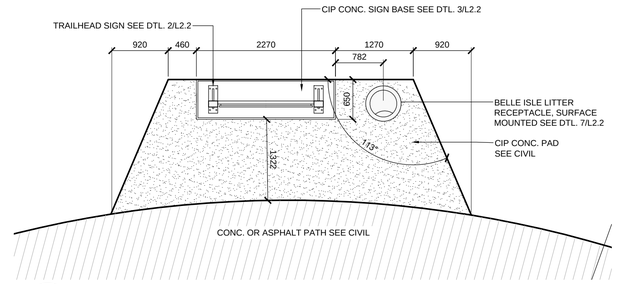

6 L2.1 TRAILHEAD SIGN NODE - LAYOUT

SCALE 1:50

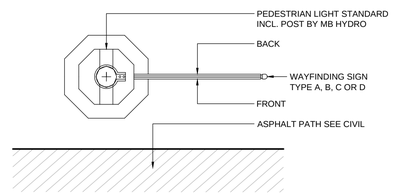

PLAN 1:20

WAYFINDING SIGNAGE NOTES:

1. ALL DIMENSIONS ARE IN MILLIMETERS.

2. WAYFINDING SIGNAGE COMPONENTS ARE IDENTICAL TO EXISTING CHIEF PEGUIS GREENWAY SIGNAGE LOCATED EAST OF HENDERSON HIGHWAY.

3. CONTRACTOR TO FIELD-VERIFY ALL DIRECTIONAL ARROWS & CONTENT OF WAYFINDING SIGNAGE PRIOR TO MANUFACTURING.

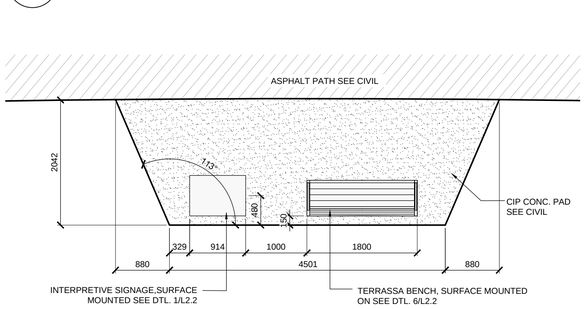

2 L2.1 SEATING NODE W/INTERP. SIGNAGE - FROG PLAIN PARK

SCALE 1:50

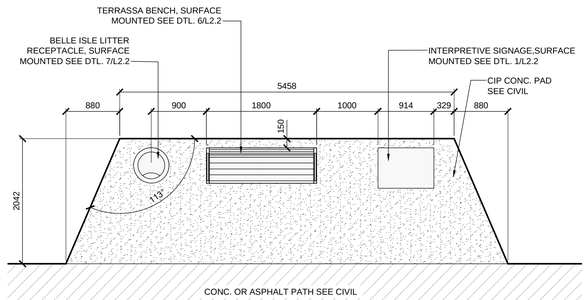

4 L2.1 SEATING NODE W/INTERP. SIGNAGE

SCALE 1:50

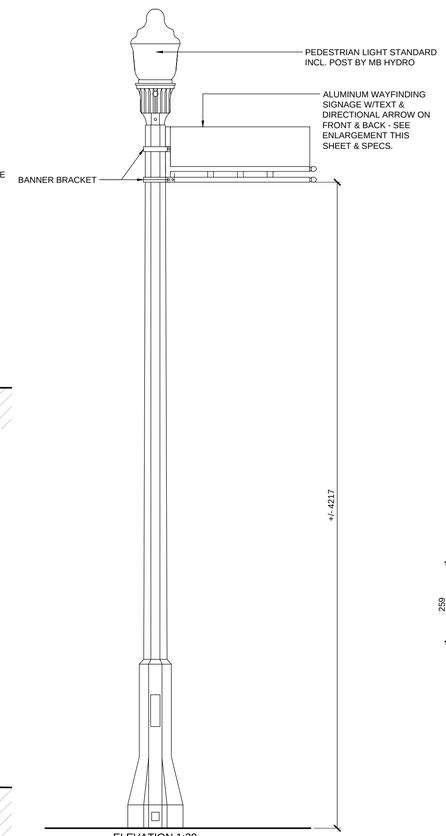

ELEVATION 1:20

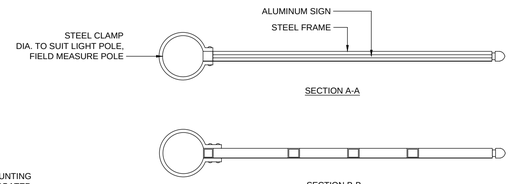

SECTION A-A

SECTION B-B

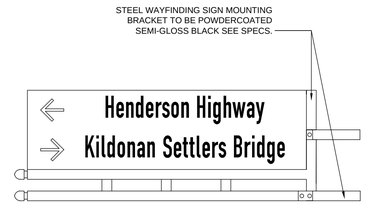

BACK

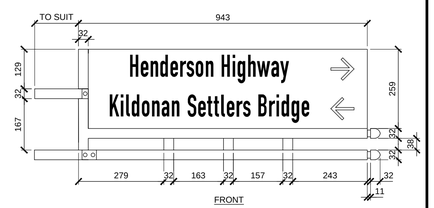

FRONT

WAYFINDING SIGN TYPE A & B - 1:10

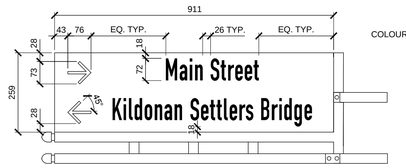

BACK

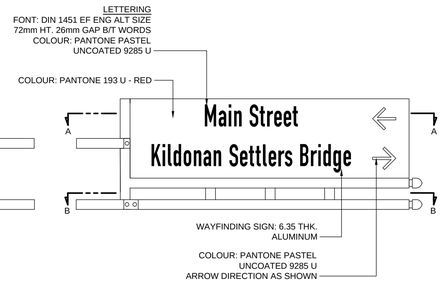

FRONT

WAYFINDING SIGN TYPE C & D - 1:10

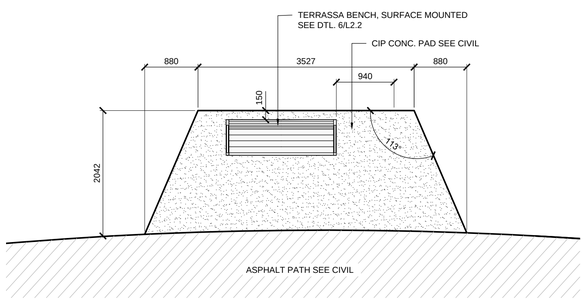

3 L2.1 SEATING NODE - FROG PLAIN PARK

SCALE 1:50

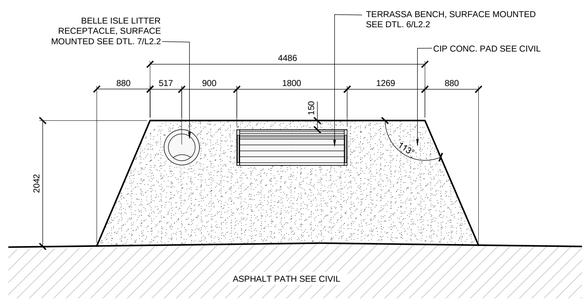

5 L2.1 SEATING NODE

SCALE 1:50

7 L2.1 WAYFINDING SIGN ON LIGHT POLE

SCALE : As Shown

LOCATIONS APPROVED UNDERGROUND STRUCTURES

SIGNED BY: _____ DATE _____

SUPV U/G STRUCTURES

LOCATION OF UNDERGROUND STRUCTURES AS SHOWN ARE BASED ON THE BEST INFORMATION AVAILABLE BUT NO GUARANTEE IS GIVEN THAT ALL EXISTING UTILITIES ARE SHOWN OR THAT THE GIVEN LOCATIONS ARE EXACT CONFIRMATION OF EXISTANCE AND EXACT LOCATION OF ALL SERVICES MUST BE OBTAINED FROM THE INDIVIDUAL UTILITIES BEFORE PROCEEDING

NO.	REVISIONS	DATE	BY
7			
6			
5			
4			
3			
2	ISSUED FOR TENDER	21-FEB-18	JH
1	ISSUED FOR REVEW	09-FEB-18	JH
0	ISSUED FOR 90% REVEW	09-JAN-17	JH

HTFC PLANNING & DESIGN
500-115 Bannatyne Avenue East Winnipeg, MB R3B 0R3
PHONE 204 944 9807 WEB hcfc.mb.ca

DESIGNED BY	JH	CHECKED BY	GM
DRAWN BY	JH	APPROVED BY	GM
HOR. SCALE		RELEASED FOR CONSTRUCTION	
VERTICAL			
DATE	21 FEB 2018	DATE	

ENGINEER'S SEAL

Jeremy Manning Member No. 81 Feb 21, 2018

CONSULTANT ACAD DWG. NO. L2.1

Winnipeg

THE CITY OF WINNIPEG
PUBLIC WORKS DEPARTMENT
ENGINEERING DIVISION

CHIEF PEGUIS TRAIL - GREENWAY EXTENSION

FROG PLAIN WAY TO HENDERSON HIGHWAY

SEATING NODE LAYOUT & DETAILS

CITY DRAWING NUMBER

SHEET 12 OF 13

BID NO. 04-2018

Feb. 26, 2018 - 9:51am
\\prf\HTFC_FILE_SERVER\2017\17-094 Chief Peguis Trail Greenway Extension\ACAD\17-094 Details.dwg -tab:L2.1