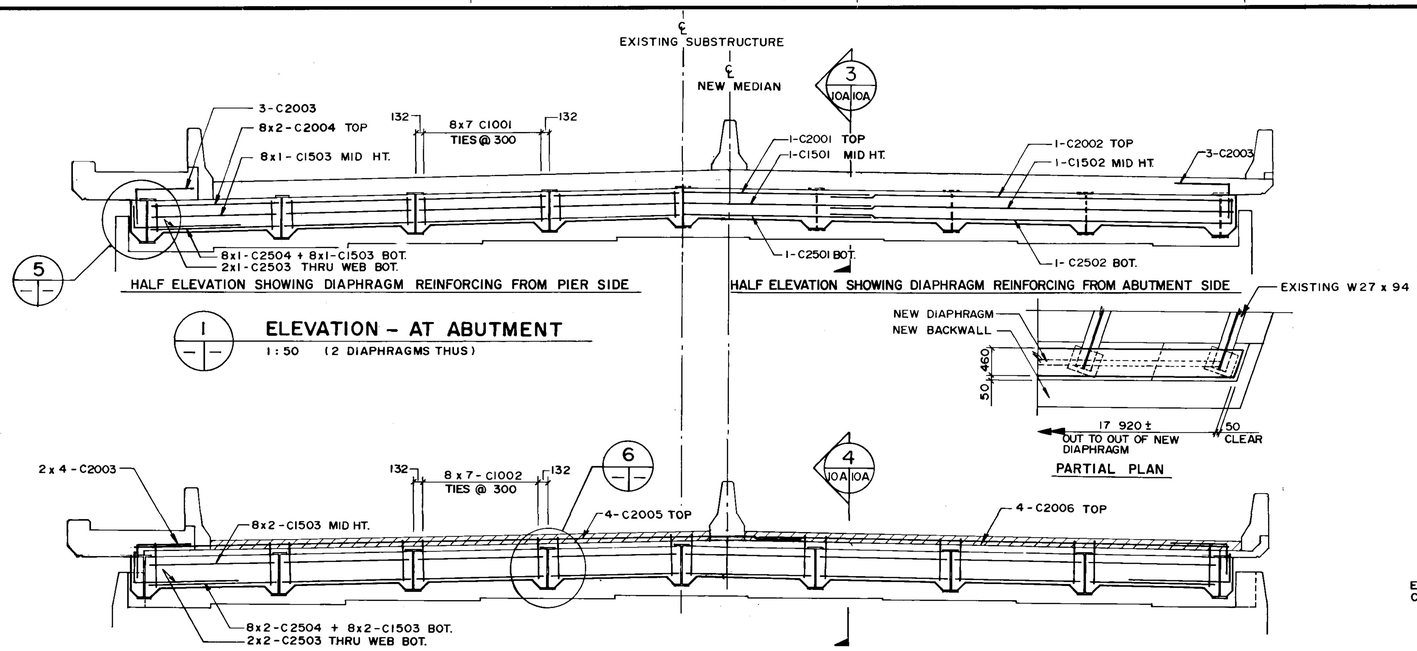

1 ELEVATION – AT ABUTMENT
1 : 50 (2 DIAPHRAGMS THUS)

2 ELEVATION – AT PIER
1 : 50 (3 DIAPHRAGMS THUS)

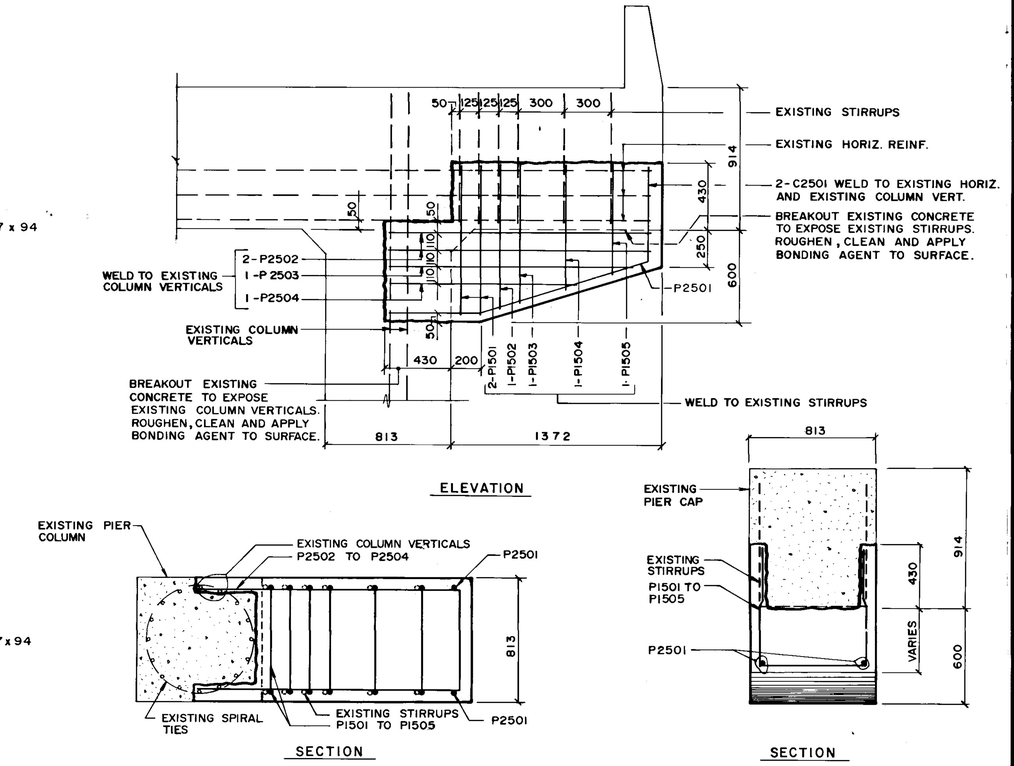

7 NEW CONCRETE BRACKET AT EXISTING PIER CAP
1 : 20 EAST SIDE ONLY 3 LOCATIONS THUS

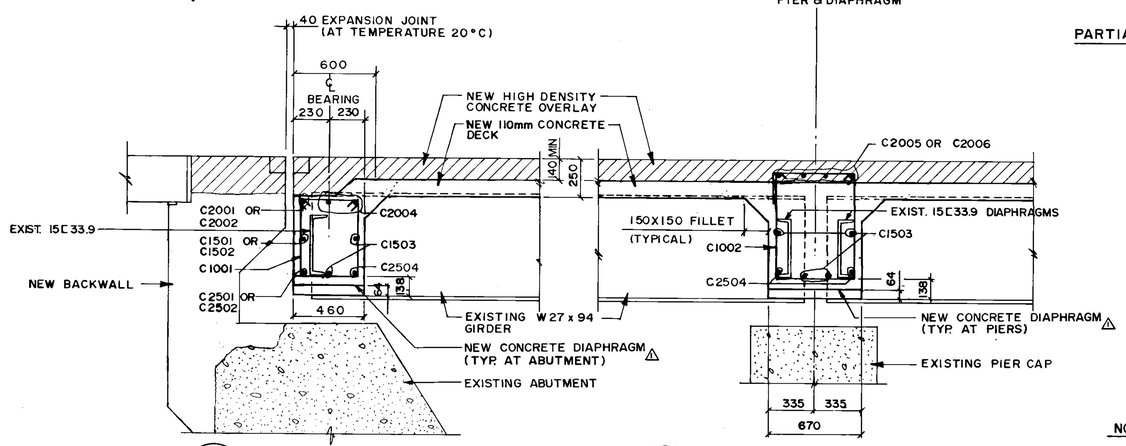

3 SECTION – AT ABUTMENT
10A 10A 13A 10A
1 : 20

4 SECTION – AT PIER
10A 10A 13A 10A
1 : 20

NOTES FOR EXISTING CONDUITS & OTHER UTILITIES

1. DISMANTLING OF EXISTING UTILITIES AND OTHER OUTLETS UNDER THE BRIDGE SHOULD BE PROPERLY COORDINATED TO CORRESPONDING AGENCIES.
2. ACTUAL LOCATIONS OF EXISTING UTILITIES SHOULD BE VERIFIED IN THE FIELD BEFORE PROCEEDING WITH CONSTRUCTION.

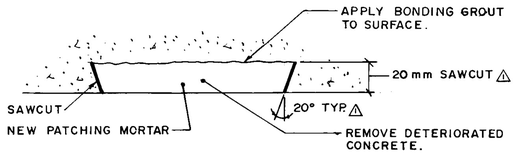

9 DETAIL
N.T.S.

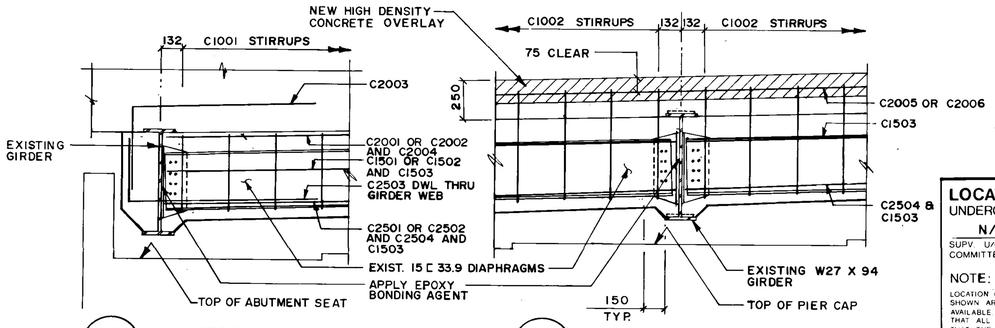

5 DETAIL – AT ABUTMENT
1 : 20

6 DETAIL – AT PIER
1 : 20

AS-BUILT
DATE 91.02.26 BY
CHECKED BY

B-5903-10

LOCATION APPROVED
UNDERGROUND STRUCTURES
N/A
SUPV. U/G STRUCTURES COMMITTEE DATE

NOTE:
LOCATION OF UNDERGROUND STRUCTURES AS SHOWN ARE BASED ON THE BEST INFORMATION AVAILABLE BUT NO GUARANTEE IS GIVEN THAT ALL EXISTING UTILITIES ARE SHOWN OR THAT THE GIVEN LOCATIONS ARE EXACT. CONFIRMATION OF EXISTENCE AND EXACT LOCATION OF ALL SERVICES MUST BE OBTAINED FROM THE INDIVIDUAL UTILITIES BEFORE PROCEEDING WITH CONSTRUCTION

B.M.
ELEV.

NO	REVISIONS	DATE	BY
2	REVISED AS CONSTRUCTED	90-12-14	FPC
1	ADDENDUM	90-3-9	FPC

WARDROP ENGINEERING INC.

DESIGNED BY	J.C. & FPC	CHECKED BY	
DRAWN BY	L.G.	APPROVED BY	
HOR. SCALE / VERTICAL	AS NOTED	AUTHORIZED BY (W. NAUMKO / STREETS & BRIDGES ENGINEER)	DATE 90 12 23
DATE	JAN. 15, 1990	ACCEPTED BY (G.R. SMITH / BRIDGE ENGINEER)	DATE 90 12 23

ENGINEER
PROVINCE OF MANITOBA
C. D. STEWART
90/02/20
REGISTERED ENGINEER

CONSULTANT DRAWING NO.
890007-02-00

THE CITY OF WINNIPEG
WORKS AND OPERATIONS DIVISION
STREETS AND TRANSPORTATION DEPARTMENT

EMPRESS STREET OVERPASS
STRUCTURE REHABILITATION, STRENGTHENING AND RELATED WORKS

DIAPHRAGM DETAILS AND PIER CAP REINFORCING

CITY DRAWING NUMBER
B100-90-10A(R1)