WO 101-84

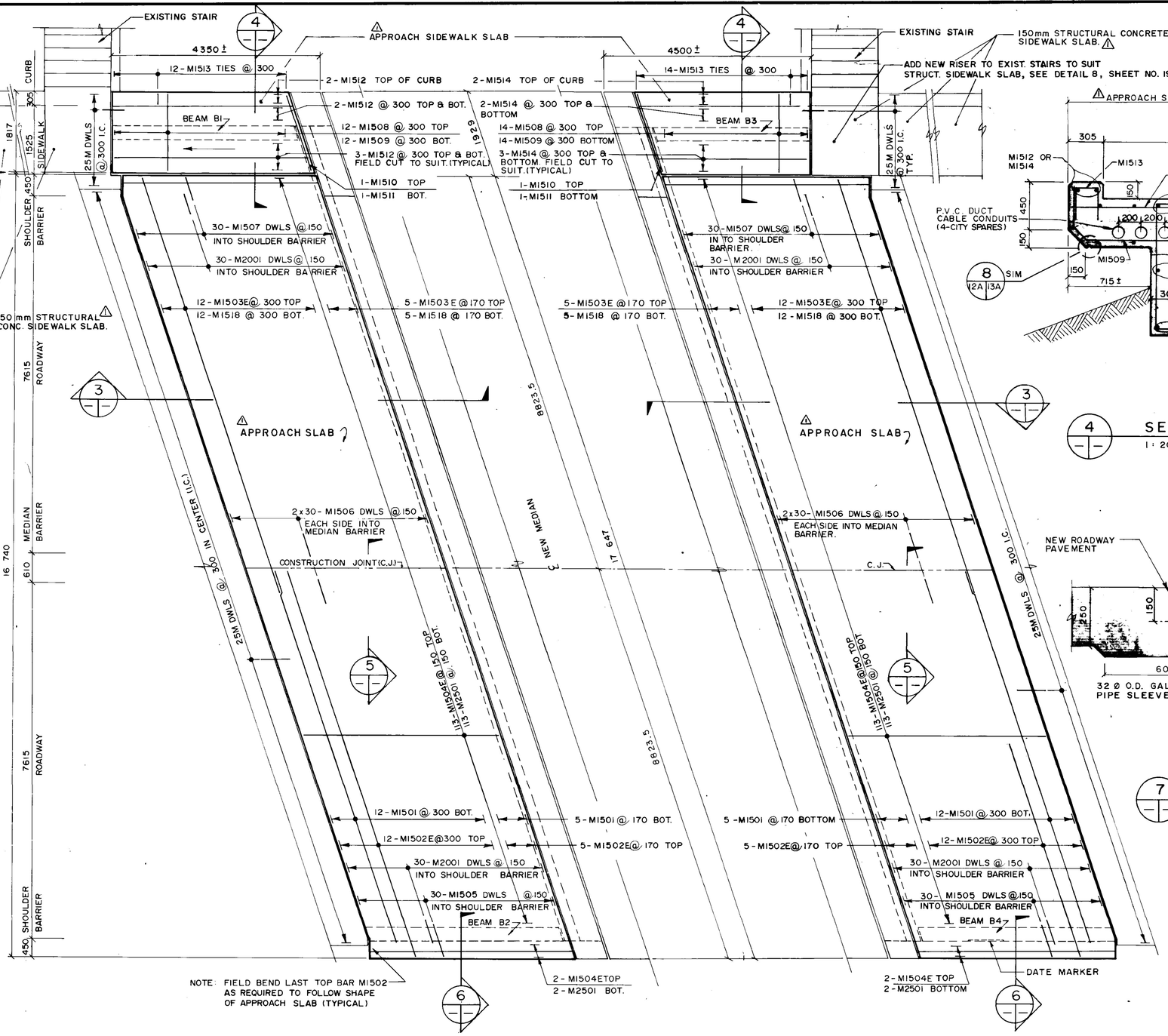

1 PLAN - SOUTH APPROACH SLAB
1 : 50

2 PLAN - NORTH APPROACH SLAB
1 : 50

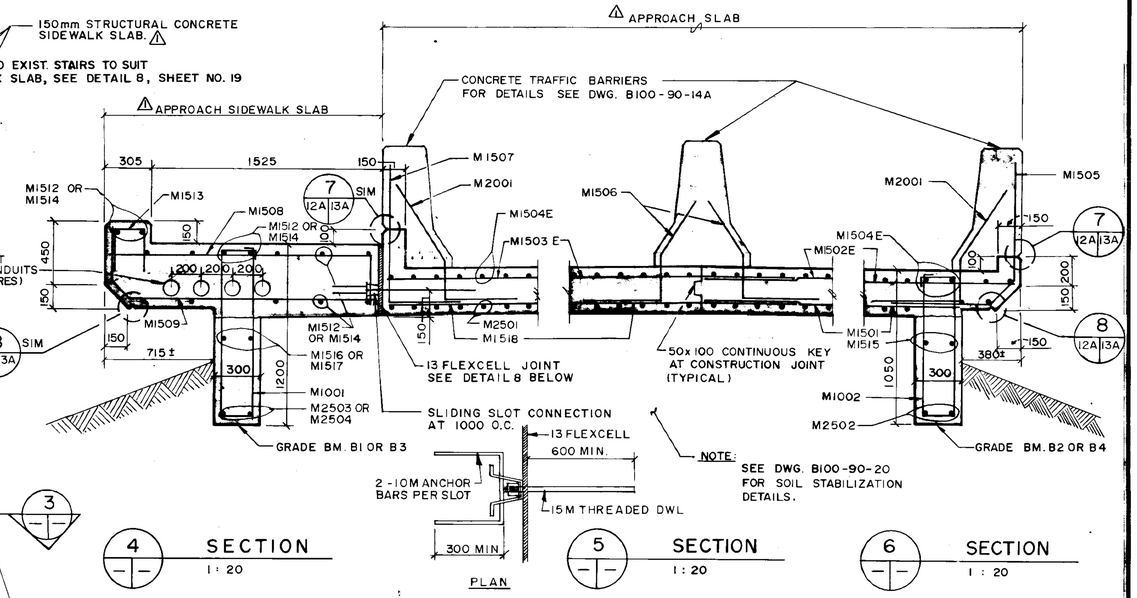

4 SECTION
1 : 20

5 SECTION
1 : 20

6 SECTION
1 : 20

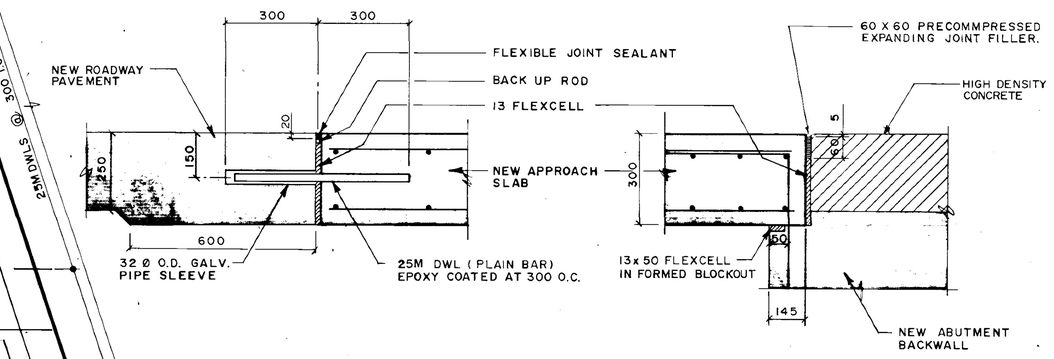

7 DETAIL
1 : 10

8 DETAIL
1 : 10

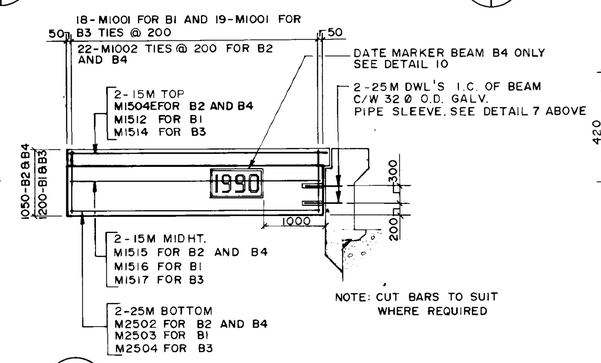

9 ELEVATION GRADE BM. B2 SHOWN.
1 : 50
BEAM B1, B3 & B4 SIMILAR

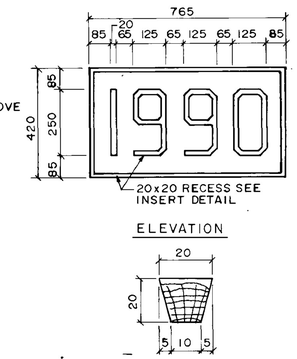

10 DATE MARKER DETAIL
NTS

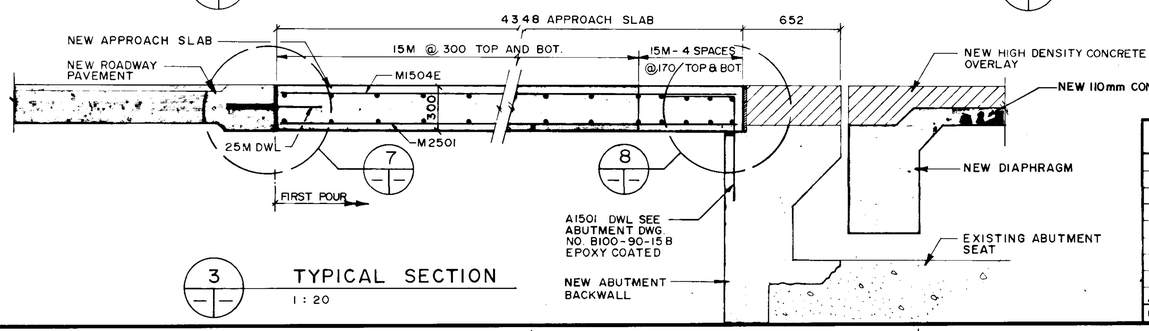

3 TYPICAL SECTION
1 : 20

AS-BUILT
DATE 91.02.26 BY
CHECKED BY

B-5903-15

NO	REVISIONS	DATE	BY
2	REVISED AS CONSTRUCTED	90-12-14	FPC
1	ADDENDUM	90-3-19	F P C

B M ELEV

WARDROP ENGINEERING INC.

DESIGNED BY	JC & FPC	CHECKED BY	
DRAWN BY	LG	APPROVED BY	
HOR SCALE / VERTICAL	AS NOTED	AUTHORIZED BY / DATE	R. KAUMKO / STREETS & BRIDGES ENGINEER
DATE	JAN. 15, 1990	ACCEPTED BY / DATE	D.R. SMITH / BRIDGE ENGINEER

ENGINEERS SEAL: PROVINCE OF MANITOBA C. D. STEWART 90/02/20 REGISTERED ENGINEER

CONSULTANT DRAWING NO. 890007-02-00

THE CITY OF WINNIPEG
WORKS AND OPERATIONS DIVISION
STREETS AND TRANSPORTATION DEPARTMENT

EMPRESS STREET OVERPASS
STRUCTURE REHABILITATION, STRENGTHENING AND RELATED WORKS

CONCRETE & REINFORCING DETAILS APPROACH SLABS AND SIDEWALKS

CITY DRAWING NUMBER
B100-90-12A(R1)