NOTES:

1. CONCRETE AS PER CW 3310-R4
2. TRANSVERSE JOINT SPACING TO MATCH EXISTING PAVEMENT SLAB JOINT SPACING
3. ALL REINFORCING FOR MEDIAN BARRIER AND SAFETY MEDIAN TO BE EPOXY COATED.

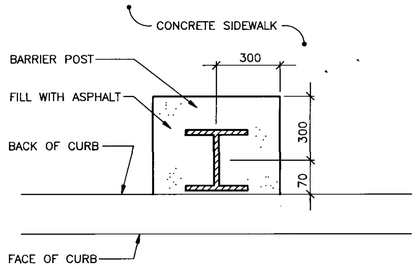

1 ALUMINUM BALANCE BARRIER POST BLOCKOUT IN CONCRETE SIDEWALK (PLAN VIEW)
N.T.S.

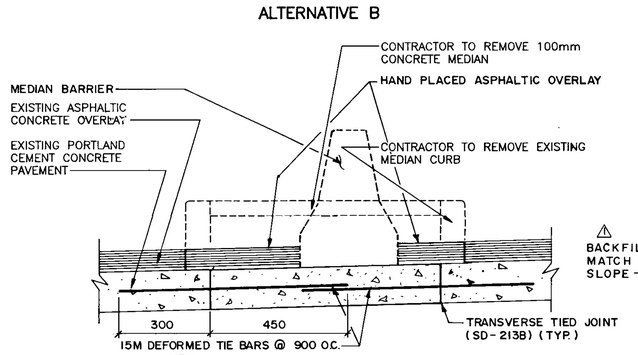

2 TYPICAL CROSS-SECTION DETOUR – ROADWAY CROSSOVER
N.T.S.

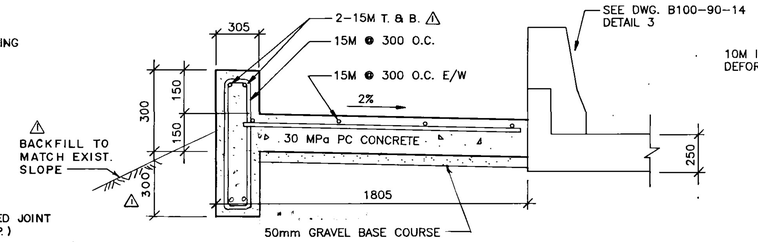

3 DETAIL@ APPROACH SIDEWALK SLAB WITH RAILING AT NORTH WEST CORNER OF BRIDGE
N.T.S.

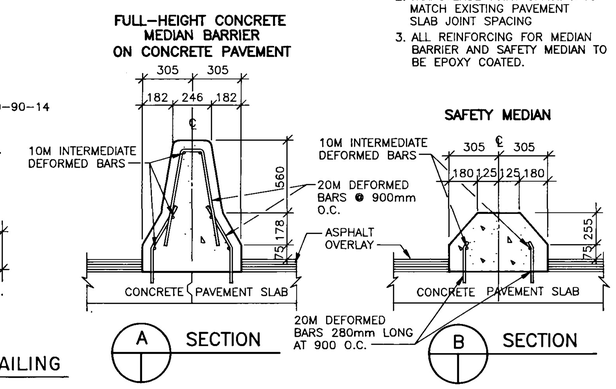

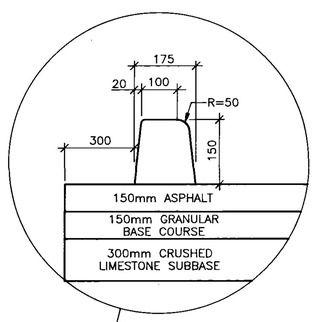

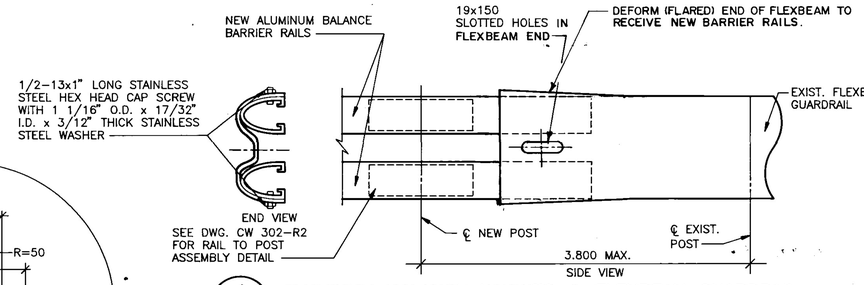

4 ALUMINUM BALANCE BARRIER & FLEXBEAM GUARDRAIL CONNECTION AT STA. 4+63 (E. SIDE OF EMPRESS ST.)
N.T.S.

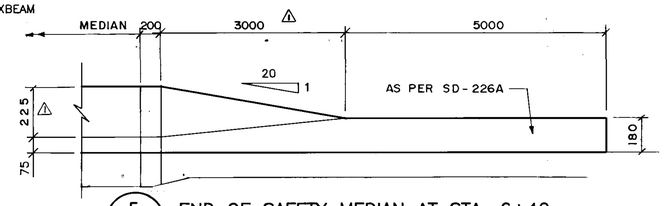

5 END OF SAFETY MEDIAN AT STA. 6+40
N.T.S.

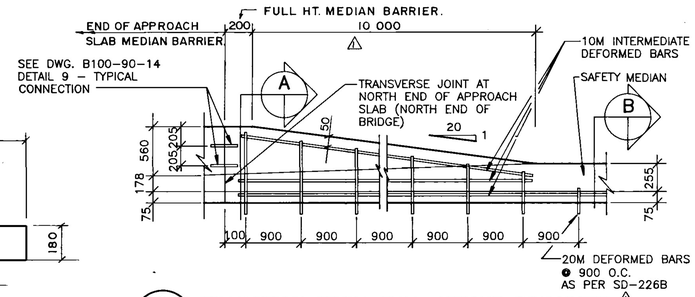

6 TRANSITION FROM FULL-HEIGHT CONCRETE MEDIAN BARRIER TO SAFETY MEDIAN
N.T.S.

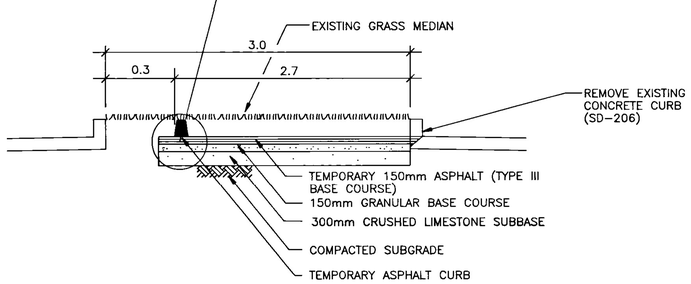

7 TEMPORARY LEFT-TURN LANE ON PORTAGE AVENUE EASTBOUND FOR DETOUR ALTERNATIVE A
N.T.S.

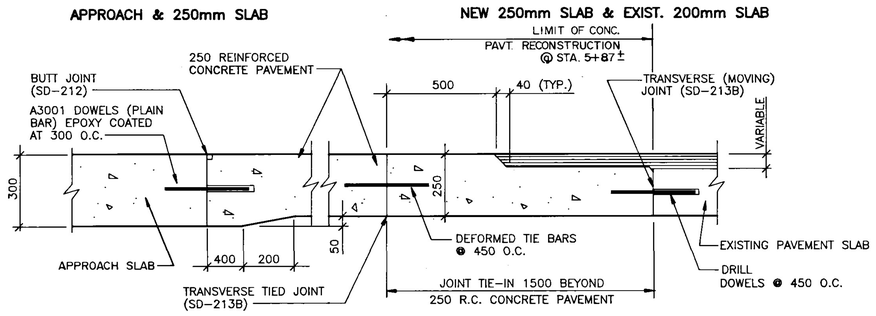

8 23 TYPICAL CONCRETE PAVEMENT TIE-IN
N.T.S.

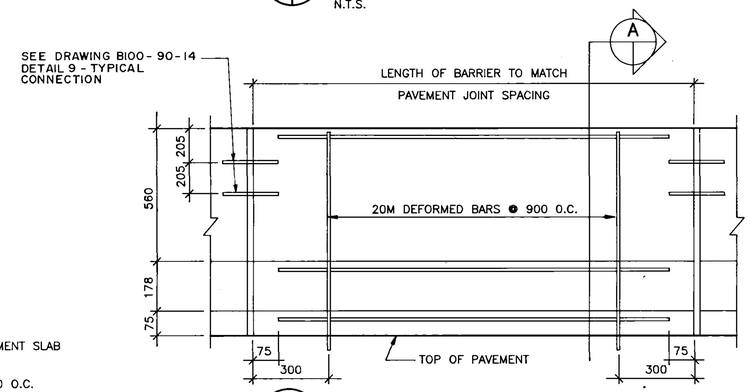

10 MEDIAN BARRIER – PAVEMENT
N.T.S.

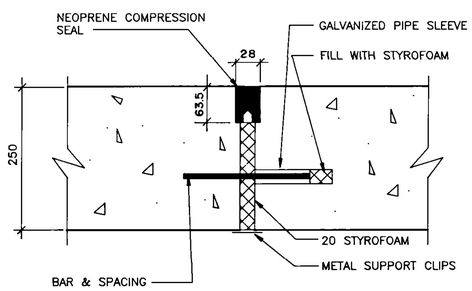

9 23 ROADWAY EXPANSION/CONTRACTION JOINT
N.T.S.

AS-BUILT
DATE 91.02.26 BY
CHECKED BY

B-5903-27

B.M. ELEV.

NO.	REVISIONS	DATE	BY
2	REVISED AS CONSTRUCTED	90-12-14	FPC
1	ADDENDUM	90-3-19	G.O.

WARDROP ENGINEERING INC.

DESIGNED BY	G.O.	CHECKED BY	M.S.
DRAWN BY	G.M.D.	APPROVED BY	
HOR. SCALE: / VERTICAL:	AS NOTED	AUTHORIZED BY / DATE	W. NAUMKO/STREETS & BRIDGES ENGINEER 91 02 23
DATE	90/01/15	ACCEPTED BY / DATE	G.R. SMITH/BRIDGE ENGINEER 91 02 23

ENGINEER'S SEAL: PROVINCE OF MANITOBA 90/07/20 G. O. OUELLETTE REGISTERED PROFESSIONAL ENGINEER

CONSULTANT DRAWING NO. 890007-02-00

THE CITY OF WINNIPEG
WORKS AND OPERATIONS DIVISION
STREETS AND TRANSPORTATION DEPARTMENT

EMPRESS STREET OVERPASS
STRUCTURE REHABILITATION, STRENGTHENING AND RELATED WORKS

ROADWAY RECONSTRUCTION DETAILS

CITY DRAWING NUMBER B100-90-24(R1)