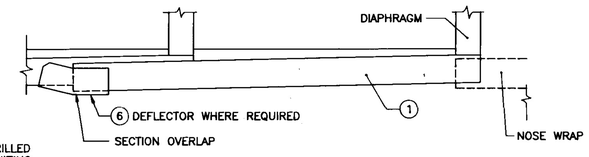

NOTES:
SPRAY ALL HOLES DRILLED IN FIELD WITH GALVANIZING COMPOUND.

TOP ASSEMBLY VIEW

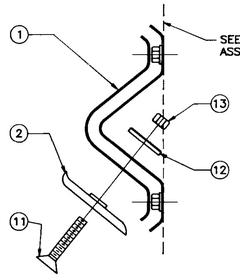

DETAIL "A"
MUSHROOM BOLT ASSEMBLY
N.T.S.

PARTS LIST FOR THRIE BEAM FENDER PANEL		
ITEM	STOCK NO.	DESCRIPTION
	35-05-012	ASSEMBLY
1	27-38-111	THRIE BEAM FENDER PANEL
2	27-08-153	MUSHROOM WASHER
3	27-01-641	⅜" x 2" H.H. BOLT
4	27-04-091	⅜" NUT
5	27-08-081	⅜" FLAT WASHER
6	27-52-031	DEFLECTOR PANEL (WHERE REQUIRED)
7	27-06-181	½"ø x 1" FLAT HEAD CAP SCREW
8	27-52-651	MUSHROOM BOLT DEFECTOR
9	27-08-011	½" FLAT WASHER
10	27-04-011	½"H.H. NUT
11	27-01-731	⅝"ø x 3" F.H. ALLEN HEAD MACHINE BOLT
12	27-08-381	2" x 2" x ¼" W ¾"ø HOLE SQ. WASHER
13	27-04-141	⅝" H.H NUT

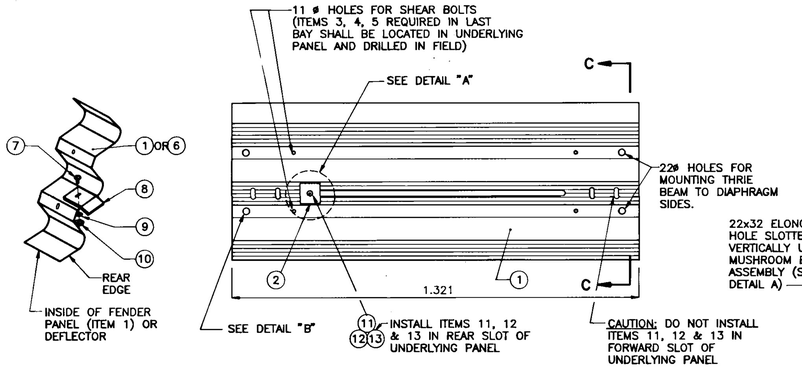

DETAIL "B"
N.T.S.

SIDE VIEW

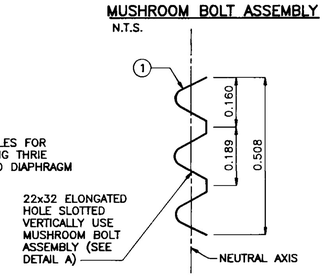

SECTION C–C

PARTS LIST FOR BACKUP ASSEMBLY			
ITEM	STOCK NO.	DESCRIPTION	REQ'D
1	SEE TABLE	BACKUP	1
2	27-52-111	THRIE-BEAM SIDE PANEL	1
3	27-52-241	TRANSITION PANEL	1
4	SEE TABLE	RIGHT ATTACHMENT BRACKET	1
5	27-52-201	LEFT ATTACHMENT BRACKET	1
6	27-52-271	SUPPORT BRACKET	1
7	27-01-261	¾"øx4¾" CONC. ANCHOR BOLT (EXP. TYPE)	*
8	27-01-381	¾"øx2" H.H. BOLT	12
9	27-01-641	¾"x1¾" H.H. BOLT	2
10	27-01-661	¾"ø FLUSH ANCHOR	2
11	27-08-081	¾" FLAT WASHER	12
12	27-04-091	¾"ø H.H. NUT	12
13	27-08-201	¾" LOCK WASHER	14
14	27-52-591	CARTRIDGE SUPPORT BRACKET	1
15	27-52-611	CLAMPING BAR	1
16	27-01-331	⅜"x4½" H.H. BOLT	2
17	27-01-221	⅜"øx1" H.H. BOLT	2
18	27-04-031	⅜"ø H.H. NUT	4
19	27-08-021	⅜" FLAT WASHER	6

TABLE FOR BACKUP ASSEMBLY				
UNIT MODEL NO.	ASSEMBLY NO.	ITEM 1 (BACKUP) STOCK NO.	ITEM 4 STOCK NO.	* ITEM 7 REQ'D
200200	38-21-021	29-03-211	27-52-191	12
206206	38-21-022	29-03-212	27-52-641	14
300300	38-21-023	29-03-213	27-52-641	14

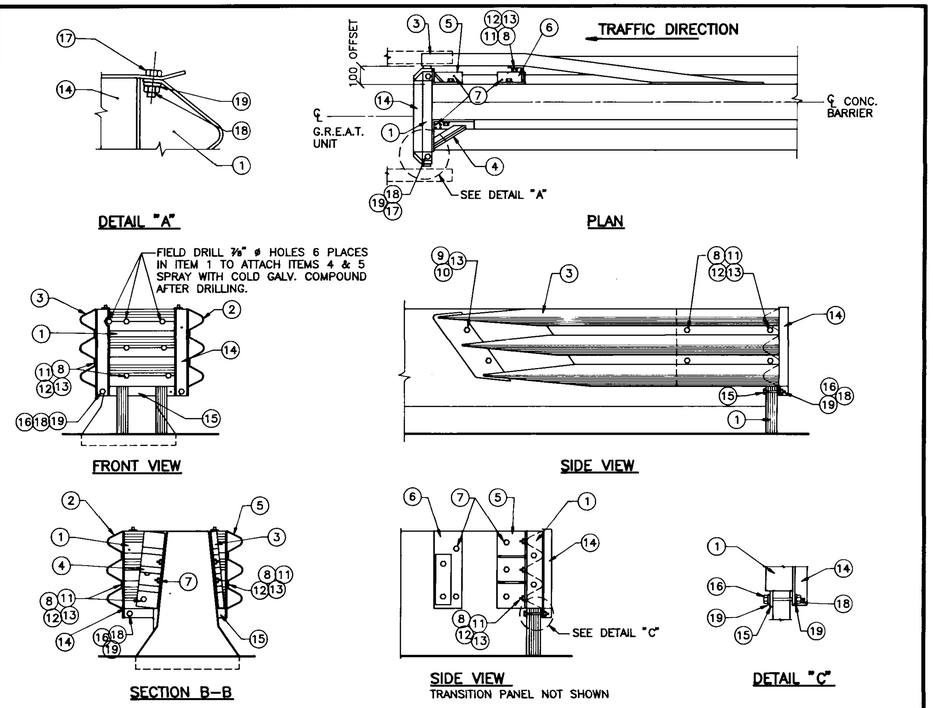

DETAIL OF BACKUP ASSEMBLY FOR CONCRETE MEDIAN TRAFFIC BARRIER BI-DIRECTIONAL
N.T.S. U/N

THRIE BEAM FENDER PANEL ASSEMBLY DETAILS
(TYPICAL FOR EACH FENDER PANEL)
1 : 10 U/N

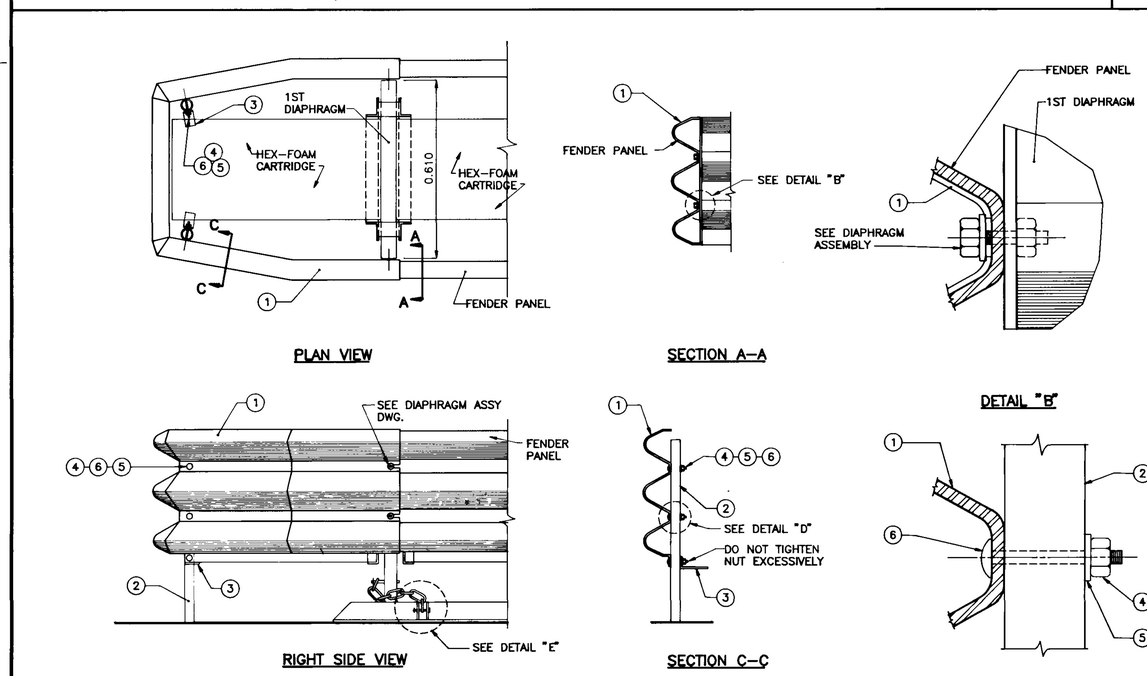

PARTS LIST FOR NOSE COVER ASSEMBLY		
ITEM	STOCK NO.	DESCRIPTION
1	27-20-031	DIAPHRAGM
2	27-52-581	CARTRIDGE SUPPORT BRACKET
3	27-01-381	¾"ø x 2" H.H. BOLT
4	27-00-071	⅜"ø x 5" H.H. BOLT
5	27-01-221	⅜"ø x 1" H.H. BOLT
6	27-04-091	¾" H.H.. NUT
7	27-04-031	⅜" H.H. NUT
8	27-08-081	¾" FLAT WASHER
9	27-08-021	⅜" FLAT WASHER

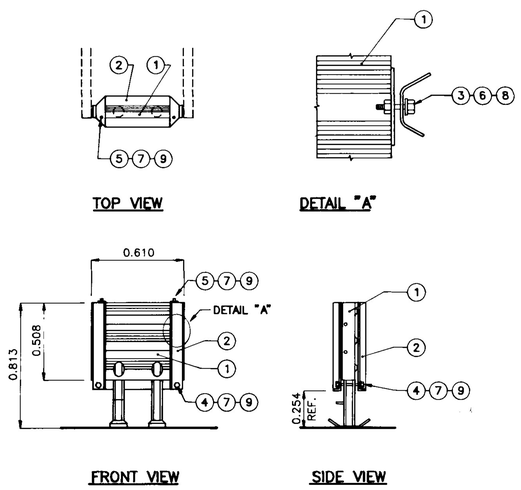

DIAPHRAGM ASSEMBLY DETAIL
(FOR HEX-FOAM CARTRIDGE)
N.T.S. U/N

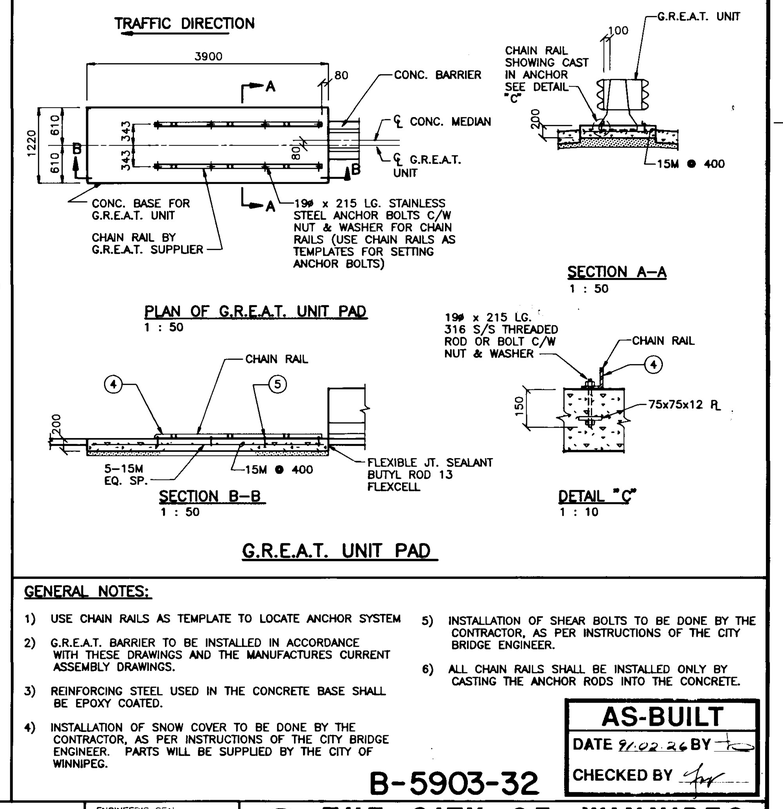

G.R.E.A.T. UNIT PAD

GENERAL NOTES:

1) USE CHAIN RAILS AS TEMPLATE TO LOCATE ANCHOR SYSTEM
2) G.R.E.A.T. BARRIER TO BE INSTALLED IN ACCORDANCE WITH THESE DRAWINGS AND THE MANUFACTURES CURRENT ASSEMBLY DRAWINGS.
3) REINFORCING STEEL USED IN THE CONCRETE BASE SHALL BE EPOXY COATED.
4) INSTALLATION OF SNOW COVER TO BE DONE BY THE CONTRACTOR, AS PER INSTRUCTIONS OF THE CITY BRIDGE ENGINEER. PARTS WILL BE SUPPLIED BY THE CITY OF WINNIPEG.
5) INSTALLATION OF SHEAR BOLTS TO BE DONE BY THE CONTRACTOR, AS PER INSTRUCTIONS OF THE CITY BRIDGE ENGINEER.
6) ALL CHAIN RAILS SHALL BE INSTALLED ONLY BY CASTING THE ANCHOR RODS INTO THE CONCRETE.

AS-BUILT
DATE 91.02.26 BY
CHECKED BY

B-5903-32

CHAIN RAIL PARTS LIST		
ITEM	STOCK NO.	DESCRIPTION
1	27-52-021	PROOF COIL CHAIN ½" (9 LINKS)
2	27-02-101	⅝"ø x 2" CLEVIS PIN
3	27-02-111	PIN KEEPER SPRING
4	27-22-033	CHAIN RAIL (8'-10")

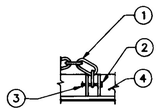

DETAIL "E"

NOTES:
TORQUE (4) TO 50–100 FT-LBS

PARTS LIST FOR NOSE COVER ASSEMBLY		
ITEM	STOCK NO.	DESCRIPTION
	35-02-08	UNIVERSAL NOSE COVER ASSEMBLY
1	20-20-811	NOSE COVER
2	27-14-892	SUPPORT LEG
3	27-14-891	SUPPORT TAB
4	27-04-031	⅜" H.H. NUT
5	27-08-021	⅜" FLAT WASHER
6	27-01-171	⅜"ø x 2-¼" CARRIAGE BOLT

NOSE COVER ASSEMBLY DETAILS
(USING HEX-FOAM CARTRIDGES)
N.T.S. U/N

NO	REVISIONS	DATE	BY
	B.M. ELEV.		
1	REVISED AS CONSTRUCTED	90-12-14	FPC
–	ISSUED WITH ADDENDUM #3	90-3-19	FPC

WARDROP ENGINEERING INC.

DESIGNED BY	G.O.	CHECKED BY	F.P.C.
DRAWN BY	G.R.A.	APPROVED BY	
HOR. SCALE: VERTICAL:	AS NOTED	AUTHORIZED BY	DATE
		N.NAUMKO/STREETS & BRIDGE ENGINEER	
		ACCEPTED BY	DATE
		G.R.SMITH/BRIDGE ENGINEER	

ENGINEER'S SEAL: PROVINCE OF MANITOBA 90/03/16 G. O. OUELLETTE REGISTERED PROFESSIONAL ENGINEER

CONSULTANT DRAWING NO. 890007-02-00

THE CITY OF WINNIPEG
WORKS AND OPERATIONS DIVISION
STREETS AND TRANSPORTATION DEPARTMENT

EMPRESS STREET OVERPASS
STRUCTURE REHABILITATION, STRENGTHENING AND RELATED WORKS
GUARDRAIL ENERGY ABSORBING TERMINAL STANDARD DETAILS

CITY DRAWING NUMBER
B100-90-29