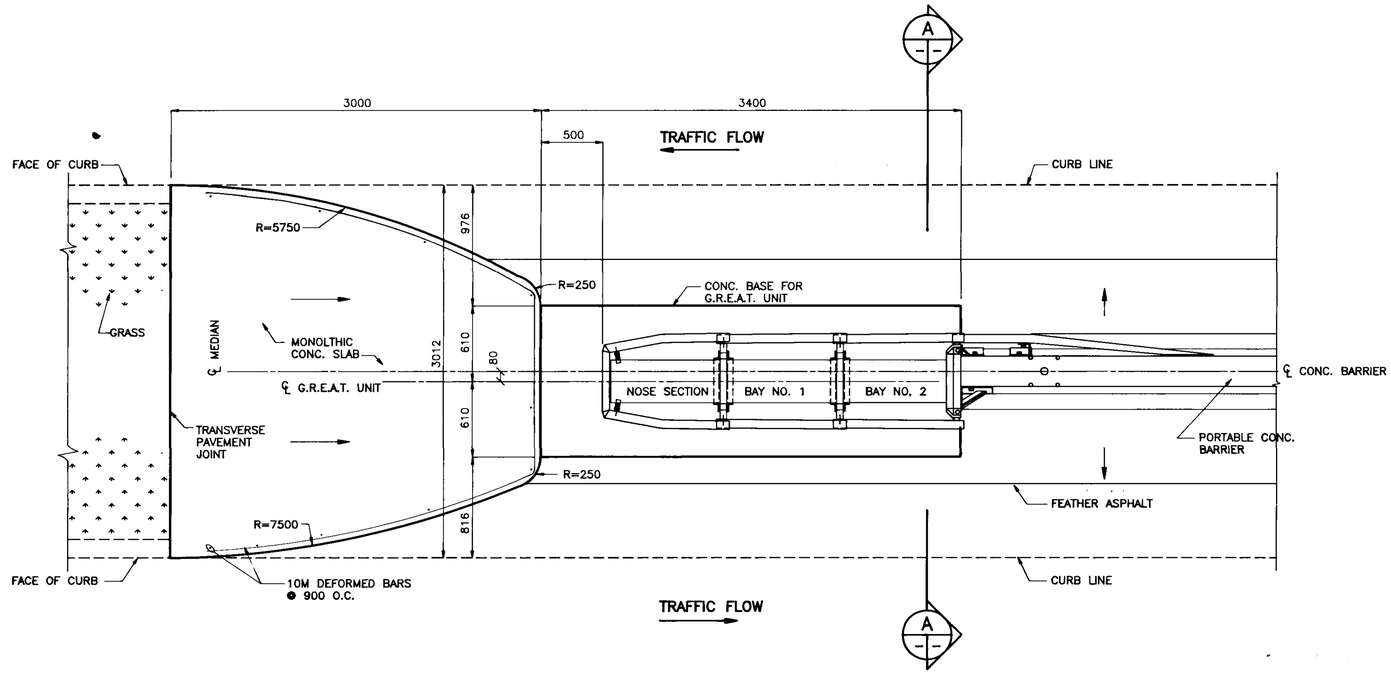

PLAN AT WEST END

PLAN AT EAST END IS SIMILAR
1 : 25

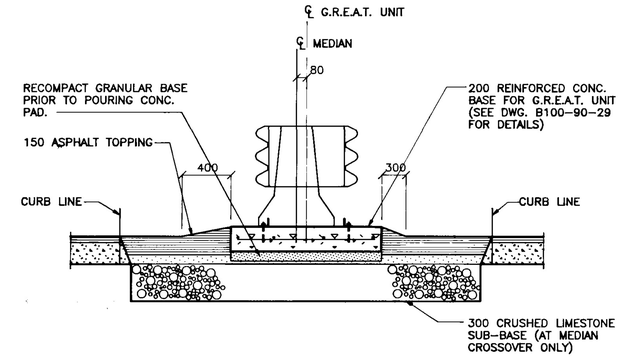

A SECTION

1 : 25

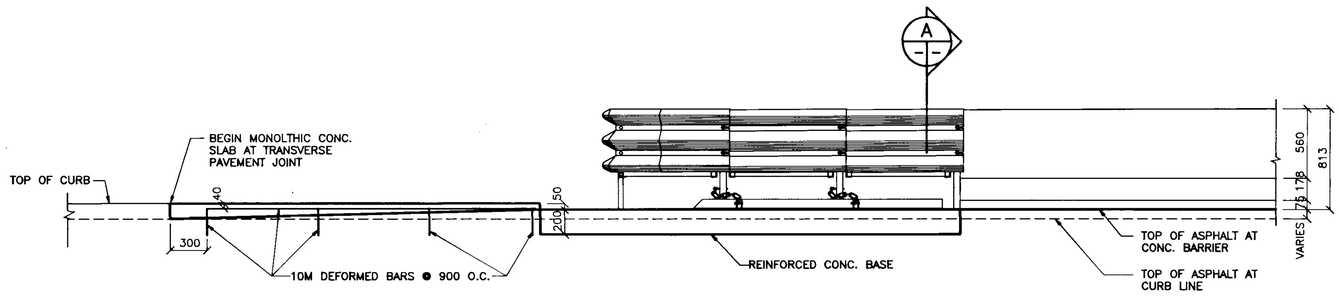

ELEVATION

1 : 25

B-5903-33

AS-BUILT
DATE 91.02.26 BY
CHECKED BY

NO.	REVISIONS	DATE	BY
1	REVISED AS CONSTRUCTED	90-12-14	FPC
–	ISSUED WITH ADDENDUM 3	90-3-19	FPC

B.M. ELEV.

WARDROP ENGINEERING INC.

DESIGNED BY G.O | CHECKED BY F.P.C.
DRAWN BY G.R.A. | APPROVED BY
HOR. SCALE: AS SHOWN
VERTICAL:
AUTHORIZED BY W. NAUMKO/STREETS & BRIDGE ENGINEER DATE 90 03 16
ACCEPTED BY G.R. SMITH/BRIDGE ENGINEER DATE 90 03 16
DATE

ENGINEER'S SEAL
PROVINCE OF MANITOBA
90/03/16
G. O. OUELLETTE
REGISTERED PROFESSIONAL ENGINEER

CONSULTANT DRAWING NO. 890007-02-00

THE CITY OF WINNIPEG
WORKS AND OPERATIONS DIVISION
STREETS AND TRANSPORTATION DEPARTMENT

EMPRESS STREET OVERPASS
STRUCTURE REHABILITATION, STRENGTHENING AND RELATED WORKS
GUARDRAIL ENERGY ABSORBING TERMINAL LOCATION PLAN

CITY DRAWING NUMBER
B100-90-30