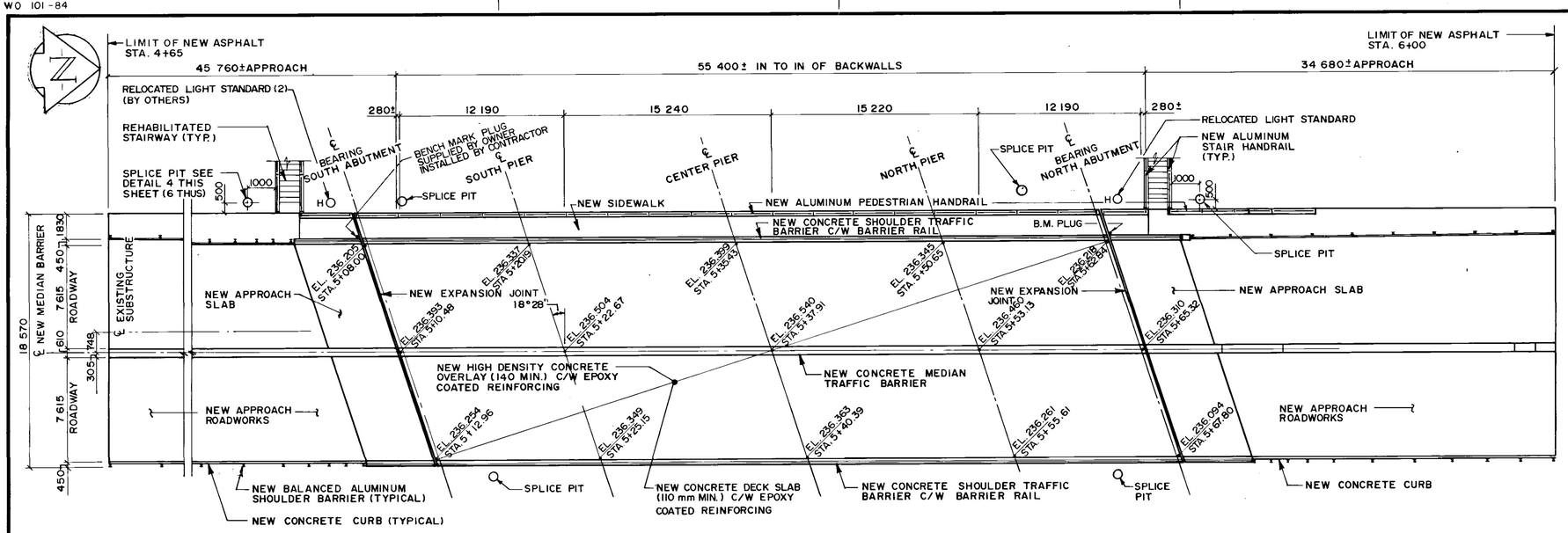

1 PLAN OF BRIDGE DECK

ELEVATIONS SHOWN ARE TOP OF HIGH DENSITY OVERLAY
1:200

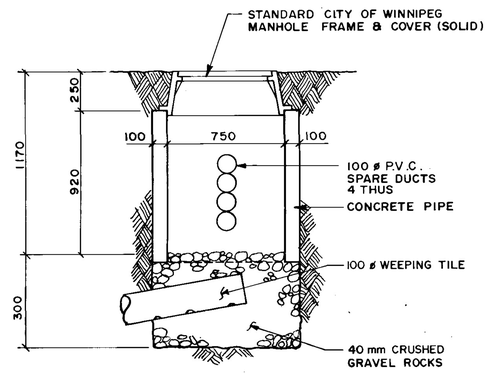

SECTION

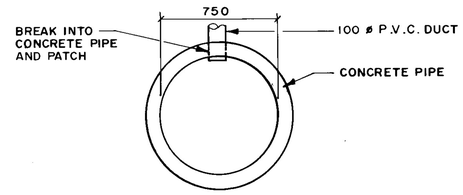

PLAN

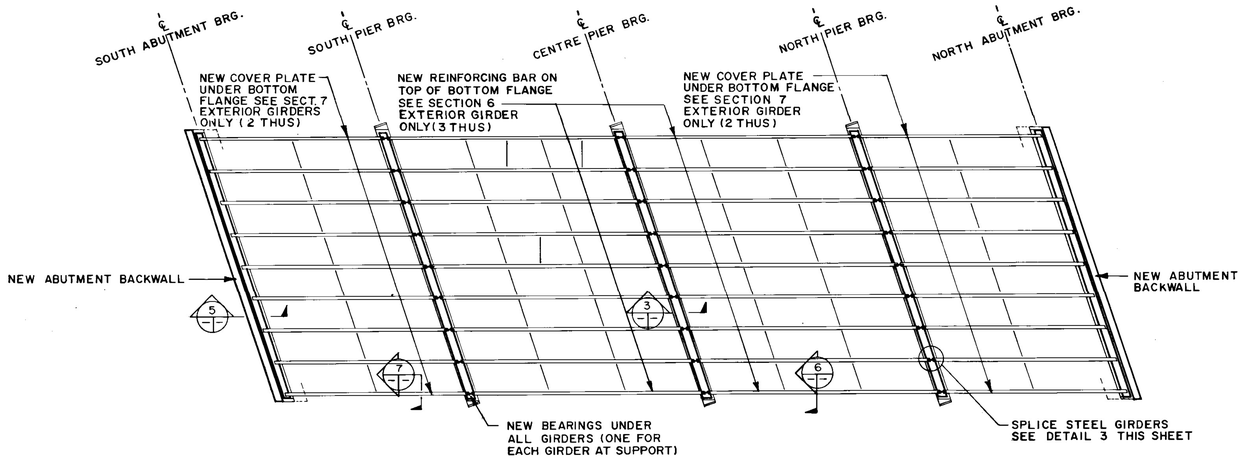

2 PLAN OF GIRDERS & SUBSTRUCTURE

1:200

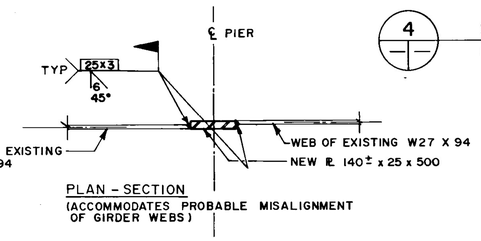

PLAN - SECTION
(ACCOMMODATES PROBABLE MISALIGNMENT OF GIRDER WEBS)

4 SPLICE PIT (6 THUS)

1:20

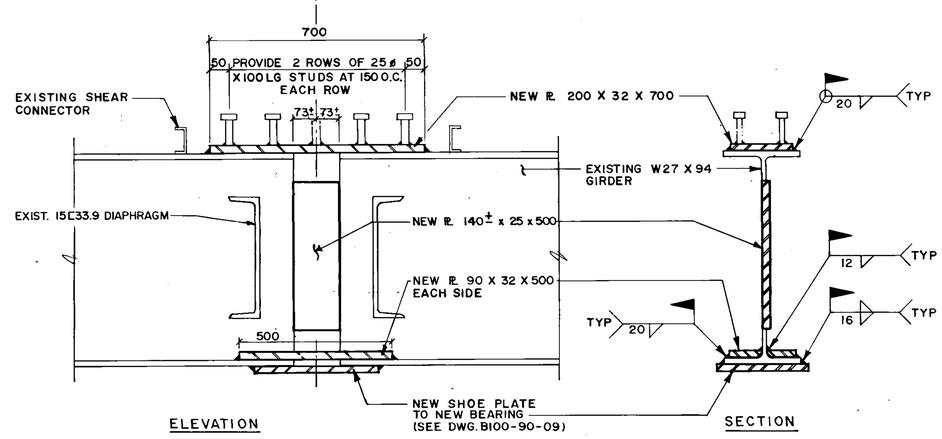

3 STEEL GIRDER SPLICING DETAIL

1:10 (27 REQUIRED AS SHOWN)

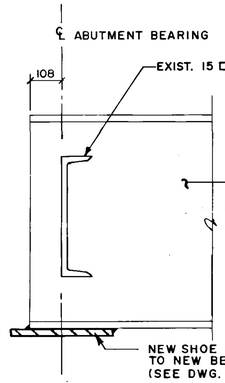

5 STEEL GIRDER DETAIL AT ABUTMENT

1:10 (18 REQUIRED AS SHOWN)

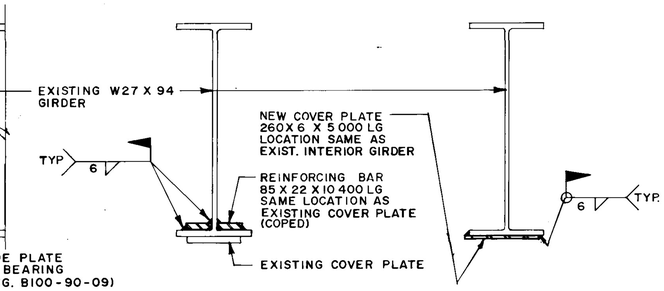

6 SECTION

1:10

7 SECTION

1:10

AS-BUILT
DATE 91-02-26 BY
CHECKED BY

LOCATION APPROVED
UNDERGROUND STRUCTURES
N/A
SUPV. U/G STRUCTURES COMMITTEE — DATE

NOTE:
LOCATION OF UNDERGROUND STRUCTURES AS SHOWN ARE BASED ON THE BEST INFORMATION AVAILABLE BUT NO GUARANTEE IS GIVEN THAT ALL EXISTING UTILITIES ARE SHOWN OR THAT THE GIVEN LOCATIONS ARE EXACT. CONFIRMATION OF EXISTENCE AND EXACT LOCATION OF ALL SERVICES MUST BE OBTAINED FROM THE INDIVIDUAL UTILITIES BEFORE PROCEEDING WITH CONSTRUCTION.

B.M.
ELEV.

NO	REVISIONS	DATE	BY
1	REVISED AS CONSTRUCTED	90-12-14	FPC

WARDROP ENGINEERING INC.

DESIGNED BY	JC & FPC	CHECKED BY	
DRAWN BY	LG	APPROVED BY	
HOR. SCALE / VERTICAL	AS NOTED	AUTHORIZED BY W. NAUMKO/STREETS & BRIDGES ENGINEER	DATE 90.12.23
DATE	JAN. 15, 1990	ACCEPTED BY K.S. SMITH / BRIDGE ENGINEER	DATE 90.12.23

ENGINEER'S STAMP: PROVINCE OF MANITOBA — C. D. STEWART — 30/01/20 — REGISTERED ENGINEER

CONSULTANT DRAWING NO. 890007-02-00

THE CITY OF WINNIPEG
WORKS AND OPERATIONS DIVISION
STREETS AND TRANSPORTATION DEPARTMENT

EMPRESS STREET OVERPASS
STRUCTURE REHABILITATION, STRENGTHENING AND RELATED WORKS

PLANS SHOWING LIMITS OF NEW WORKS

CITY DRAWING NUMBER: B100-90-08

B-5903-8