WO 102-84

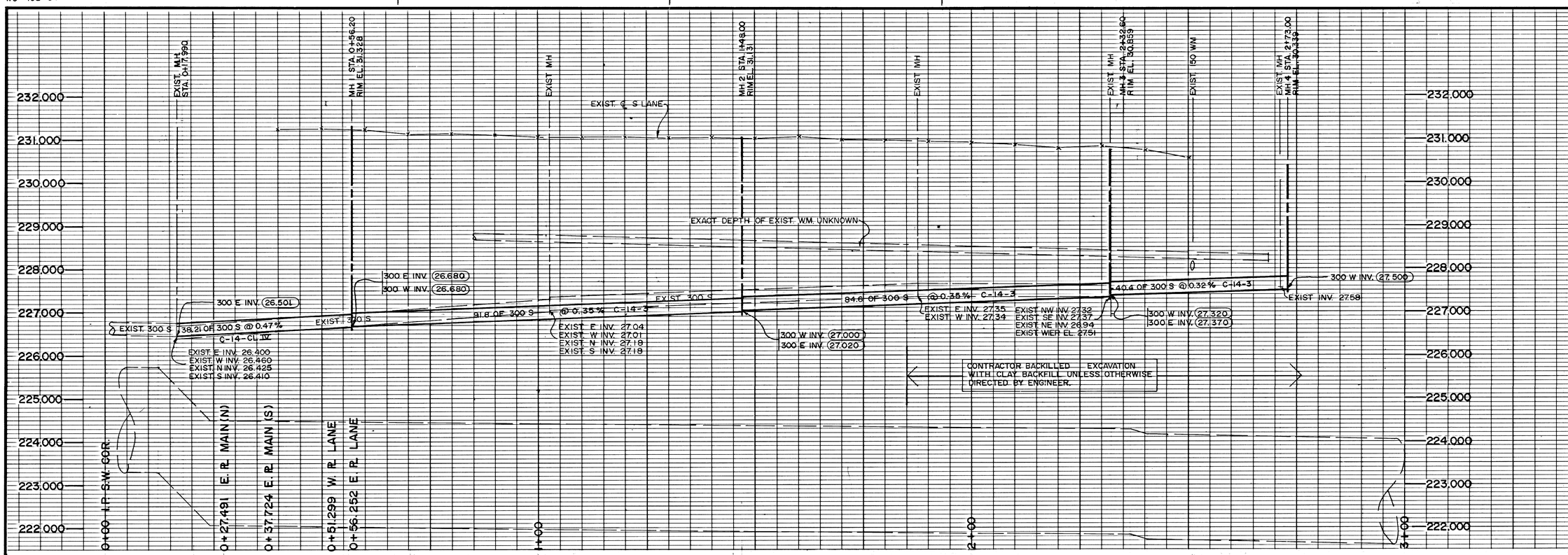

SEWER SERVICES

House #	Jct Loc FM MH#1
189 Burrows	5.0 m E
187/185	10.5 m E
182	21.6 m E
181	31.7 m E
180	33.3 m E
177	39.2 m E
178	41.6 m E
173	40.4 m E
176/174	54.8 m E
170	59.2 m E
169	70.9 m E
168	74.1 m E
165	Wyed with 169
164	84.5 m E
161	83.7 m E
162	Wyed with 164

House #	Jct Loc FM MH#2
157 Burrows	1.2 m E
154	13.6 m E
153	Wyed with 149
149	23.4 m E
152	22.7 m E
150	28.3 m E
145	33.8 m E
143	Wyed with 141
148	44.1 m E
141	53.6 m E
146	51.2 m E
137	63.0 m E
133	Wyed with 137
131	74.9 m E
129	Wyed with 127
140	72.0 m E
136	80.7 m E
127	83.1 m E

House #	Jct Loc FM MH#3
130 Burrows	25.0 m E
123	19.8 m E
126	37.9 m E
122	39.5 m E
125	Wyed with 123

3S - 2409

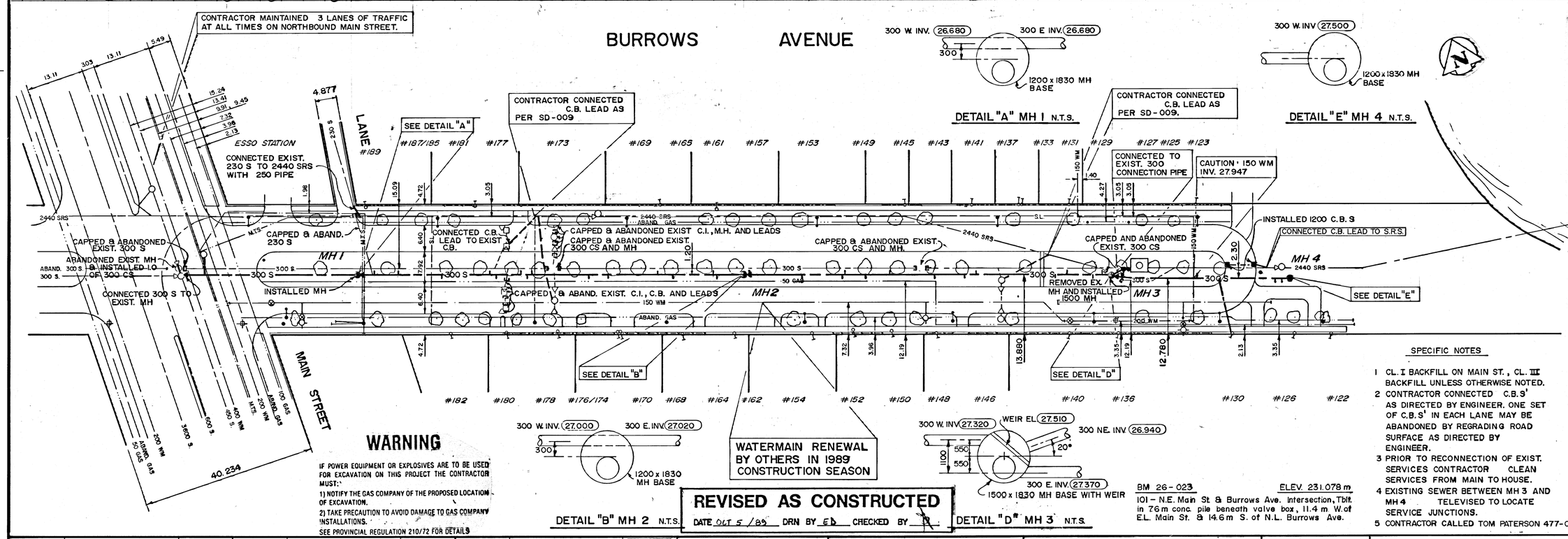

WARNING

IF POWER EQUIPMENT OR EXPLOSIVES ARE TO BE USED FOR EXCAVATION ON THIS PROJECT THE CONTRACTOR MUST:

1) NOTIFY THE GAS COMPANY OF THE PROPOSED LOCATION OF EXCAVATION.

2) TAKE PRECAUTION TO AVOID DAMAGE TO GAS COMPANY INSTALLATIONS.

SEE PROVINCIAL REGULATION 210/72 FOR DETAILS

REVISED AS CONSTRUCTED

DATE OCT 5 /89 DRN BY ED CHECKED BY

GENERAL SEWER RENEWAL NOTES

1. INVERTS OF ALL INTERSECTING PIPES AT M.H.'s WITHIN PROPOSED LIMITS VERIFIED PRIOR TO CONSTRUCTION.
2. 331/301 INDICATES APPROX. DISTANCE OF SEWER CONNECTIONS FROM DOWNSTREAM MH. CONTRACTOR VERIFIED IN FIELD.
3. ALL EXIST. SEWER CONNECTIONS NOT IN USE ABANDONED. CONTRACTOR DYE TESTED TO ESTABLISH ACTIVE SERVICES.
4. CONTRACTOR VERIFIED DEPTH OF EXISTING WATERMAIN PRIOR TO CONSTRUCTION, AS DIRECTED BY ENGINEER.
5. CONTRACTOR MINIMIZED OPEN TRENCH PIPE INSTALLATION BY AUGERING WHERE REQUIRED OR AS DIRECTED BY ENGINEER.
6. RIM ELEVATIONS OF MANHOLES ARE APPROXIMATE AND ARE SET IN THE FIELD BY ENGINEER.
7. EXISTING SEWERS AND C.B. LEADS UNDER PAVEMENT ARE ABANDONED AND FILLED WITH NON-SHRINKABLE GROUT, AS DIRECTED BY ENGINEER.
8. PIPE CLASSES SHOWN ARE FOR CONCRETE PIPE UNLESS OTHERWISE SPECIFIED.
9. CONTRACTOR BENCHED MANHOLES IN FIELD AS DIRECTED BY ENGINEER.

SPECIFIC NOTES

1 CL. I BACKFILL ON MAIN ST., CL. III BACKFILL UNLESS OTHERWISE NOTED.
2 CONTRACTOR CONNECTED C.B.'S AS DIRECTED BY ENGINEER. ONE SET OF C.B.S' IN EACH LANE MAY BE ABANDONED BY REGRADING ROAD SURFACE AS DIRECTED BY ENGINEER.
3 PRIOR TO RECONNECTION OF EXIST. SERVICES CONTRACTOR CLEAN SERVICES FROM MAIN TO HOUSE.
4 EXISTING SEWER BETWEEN MH 3 AND MH 4 TELEVISED TO LOCATE SERVICE JUNCTIONS.
5 CONTRACTOR CALLED TOM PATERSON 477-0295 PRIOR TO MTS RECONNECTION

BM 26-023
101 - N.E. Main St & Burrows Ave. Intersection, Tblf. in 76m conc. pile beneath valve box, 11.4 m W. of E.L. Main St. & 14.6 m S. of N.L. Burrows Ave.

ELEV. 231.078 m

P.D. NO. 89-36

150 mm W.M.	WATERMAIN	150 mm W.M.		HYDRO		150 mm W.M.	WATERMAIN	
	HYDRANT			M.T.S.			HYDRANT	
	VALVE			CONCRETE			VALVE	
300 mm L.D.S.	LAND DRAINAGE SEWER	300 mm L.D.S.		ASPHALT		300 mm L.D.S.	LAND DRAINAGE SEWER	300 mm L.D.S.
250 mm W.W.S.	WASTE WATER SEWER	250 mm W.W.S.		PROPERTY LINE		250 mm W.W.S.	WASTE WATER SEWER	250 mm W.W.S.
	MANHOLE			SURVEY BAR			℄ PROFILE	
	CATCH BASIN			CURB STOP			AUGERED C.S.	
	CURB INLET			C.B. LEAD				
	JUNCTIONS			COMBINED SEWER				
	CULVERT							
	GAS							
EXISTING	LEGEND-PLAN	PROPOSED	EXISTING	LEGEND-PLAN	PROPOSED	EXISTING	LEGEND-PROFILE	PROPOSED

LOCATION APPROVED
UNDERGROUND STRUCTURES
SUPV. U/G STRUCTURES COMMITTEE — DATE

NOTE:
LOCATION OF UNDERGROUND STRUCTURES AS SHOWN ARE BASED ON THE BEST INFORMATION AVAILABLE BUT NO GUARANTEE IS GIVEN THAT ALL EXISTING UTILITIES ARE SHOWN OR THAT THE GIVEN LOCATIONS ARE EXACT. CONFIRMATION OF EXISTENCE AND EXACT LOCATION OF ALL SERVICES MUST BE OBTAINED FROM THE INDIVIDUAL UTILITIES BEFORE PROCEEDING WITH CONSTRUCTION.

B.M.
ELEV.

NO.	REVISIONS	DATE	BY
2	DISTRICT COMMENTS REVISIONS	11/89	
1	REVISED AS CONSTRUCTED	5/10/89	ED

SOLMUNDSON ENGINEERING GROUP

DESIGNED BY D.G. | CHECKED BY R.A. A.T.
DRAWN BY K.T. MF | APPROVED BY
HOR. SCALE: 1:500
VERTICAL: 1:50
DATE FEBRUARY, 1989 | RELEASED FOR CONSTRUCTION DATE 89-02-22

ENGINEER'S SEAL
PROVINCE OF MANITOBA — A.U.R. TRUDERUNG — 22-02-89 — REGISTERED PROFESSIONAL ENGINEER

CONSULTANT DRAWING NO. 032-012 05

THE CITY OF WINNIPEG
WORKS AND OPERATIONS DIVISION
DISTRICT 3

COMBINED SEWER RENEWAL ON
BURROWS AVENUE
FROM MAIN STREET TO RED RIVER

CITY DRAWING NUMBER
SHEET 5 OF 7
3S-2409

MICROFILMED 90 03 16

X-25 W.W. ME L.D.S.

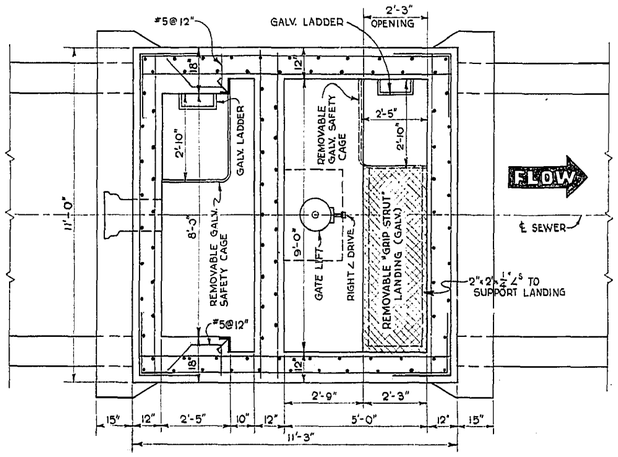

SECTION "C-C"

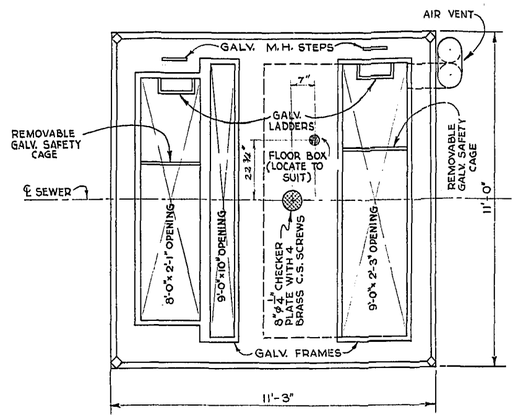

TOP PLAN

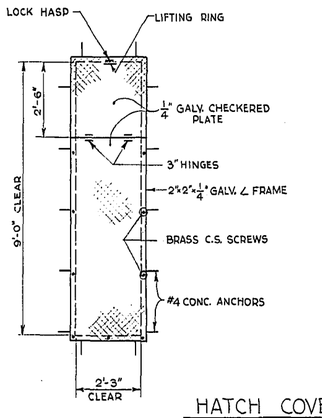

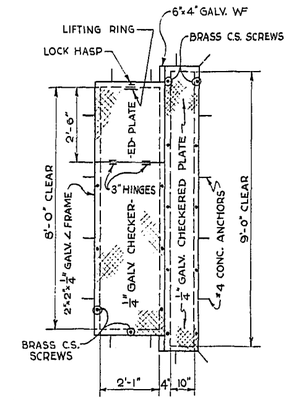

HATCH COVERS & FRAMES

NOTE : ALL COVERS TO BE FLUSH WITH TOP OF CONCRETE AT EL.29.50

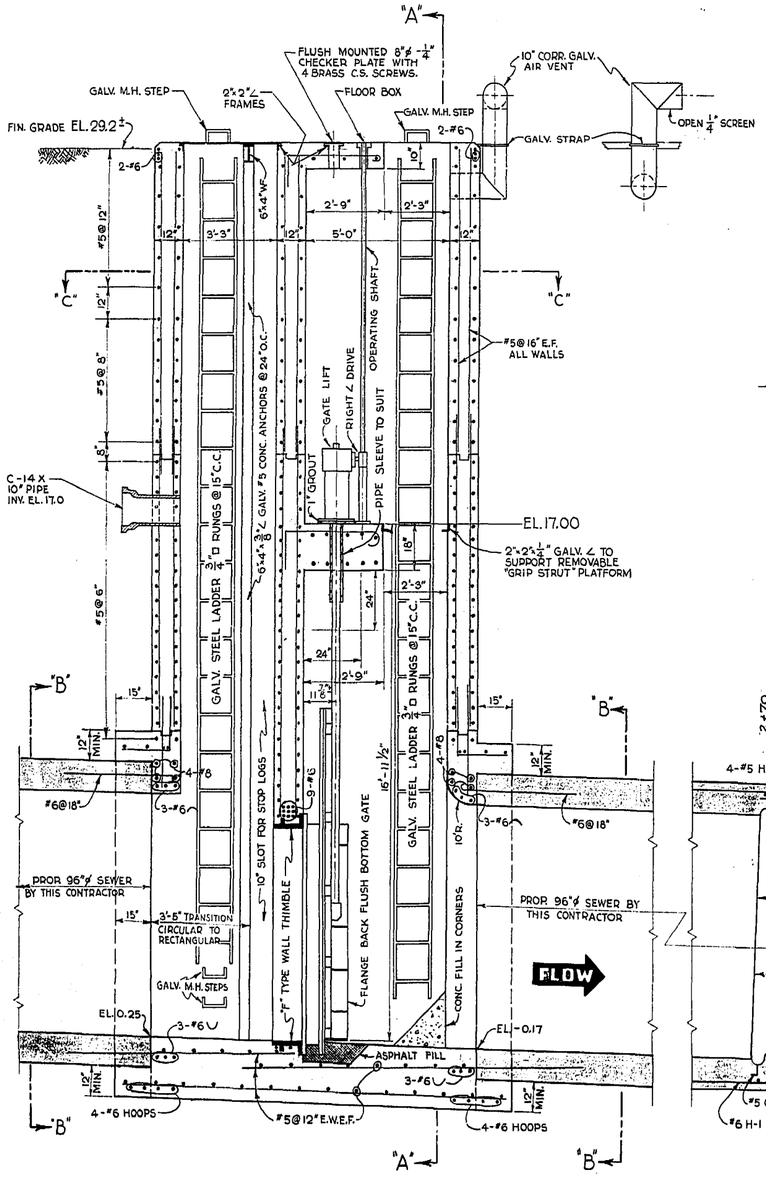

SECTIONAL ELEVATION

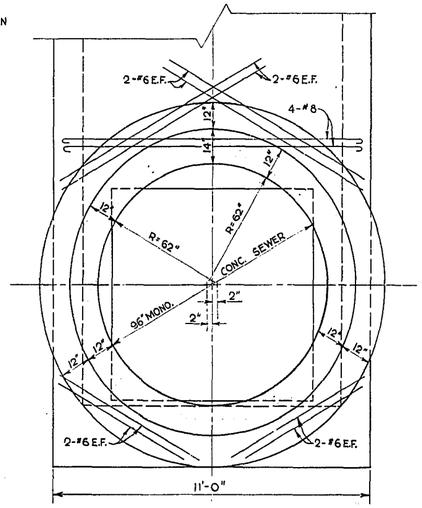

SECTION "B-B"

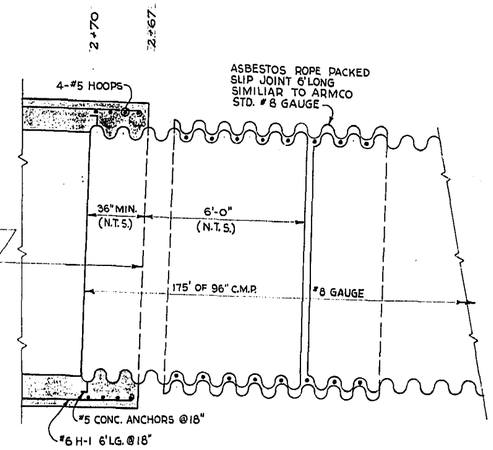

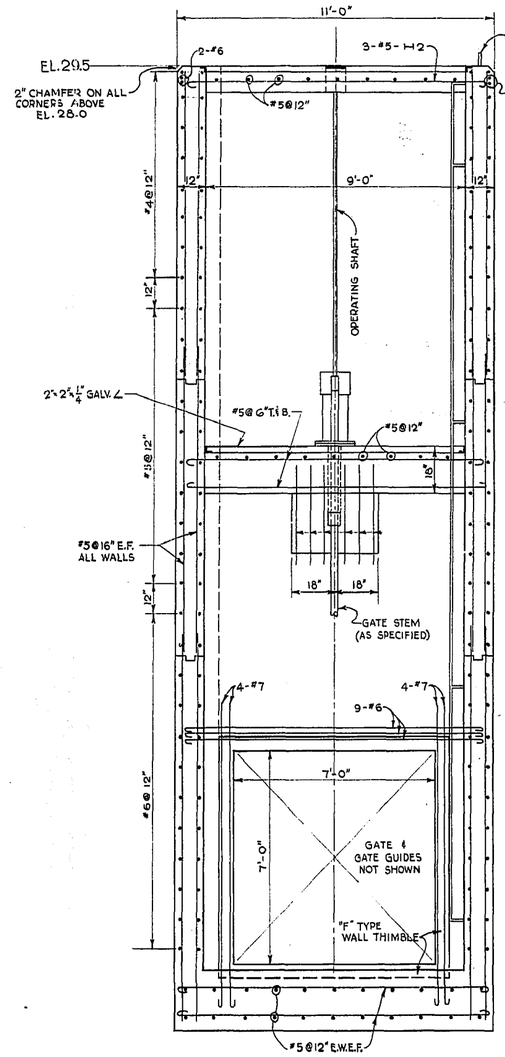

SECTION "A-A"

NOTES

1. ALL MISC. METAL TO BE HOT DIPPED GALVANIZED AFTER FABRICATION.
2. ALL STEEL 2 1/2" CLEAR
3. FOR LOCATION SEE DWG. SC15926

REVISED AS CONSTRUCTED
BY ____ DATE May 15-72
CHECKED BY EK DATE 5-15-72

METRO APPROVAL REC'D.
APPROVED UNDER BY LAW 10 Nov. 3/71
STREETS & TRAFFIC Nov. 3/71
DATE

FILE B-13-K

PROVINCE OF MANITOBA
REGISTERED ENGINEER

DETAILS OF BURROWS AV. STORM RELIEF GATE CHAMBER

CITY OF WINNIPEG
ENGINEERING DEPARTMENT
W. D. HURST, CITY ENGINEER
J. B. STRIOWSKI, DEPUTY CITY ENGINEER

DRAWN BY LP DATE OCT. 20/71
TRACED BY
CHECKED BY
APPROVED BY

SCALE 3/8" = 1'-0"
DRAWING NO. SC15925

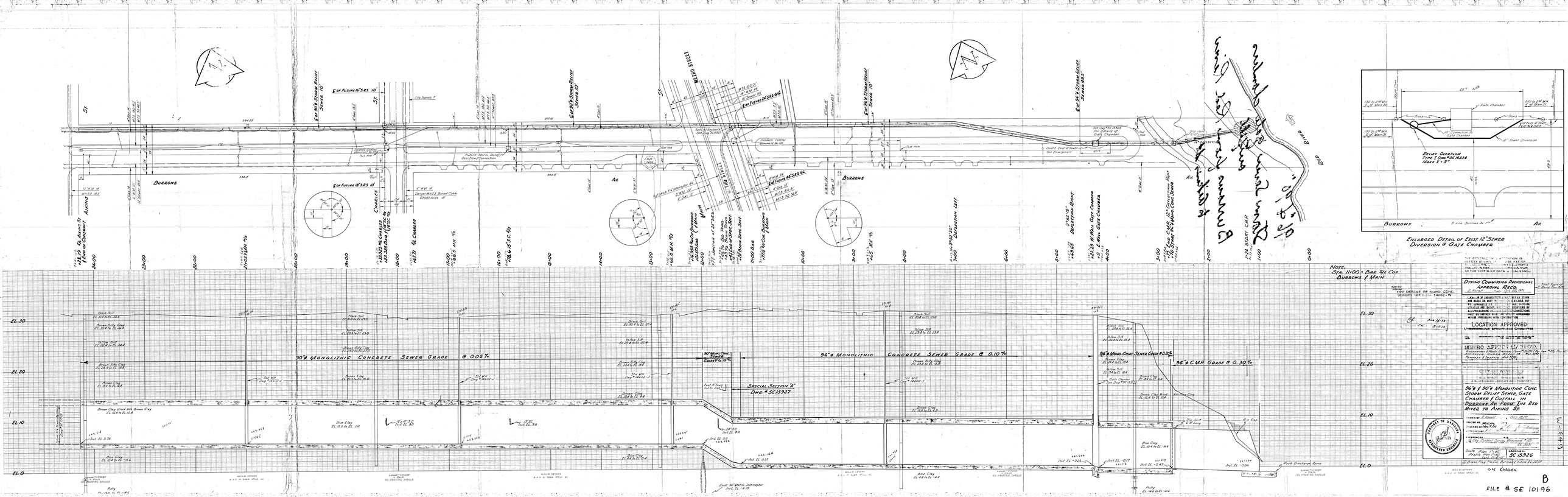
BURBOWS AV.
CHARLES
MAIN
MILLING STREET
30" ϕ MONOLITHIC CONCRETE SEWER GRADE @ 0.06%
36" ϕ MONOLITHIC CONCRETE SEWER GRADE @ 0.10%
36" ϕ MONO. CONC. SEWER GRADE @ 0.10%
36" ϕ C.M.P. GRADE @ 0.30%
SPECIAL SECTION "A"
DWG. # SC15927
ENLARGED DETAIL OF EXIST. 10" SEWER DIVERSION & GATE CHAMBER
RELIEF DIVERSION TYPE I DWG. # SC15334
MAKE 8 - 9"
NOTE: STA. 11+00 = BAR. STE. COR. BURBOWS & MAIN
DYKING COMMISSION PROVISIONAL APPROVAL REQD.
LOCATION APPROVED
HYDRO APPROVAL REQD.
CITY OF WINNIPEG
30" & 36" MONOLITHIC CONC. STORM RELIEF SEWER, GATE CHAMBER & OUTFALL IN PUBLIC WAY FROM THE RED RIVER TO AIKINS ST.
SCALE: 20 FEET = 1 IN.
PROFILE: 1 IN. = 5 FT.
DWG. # SC 15926
ON KARDEX
FILE # SE 10196
B