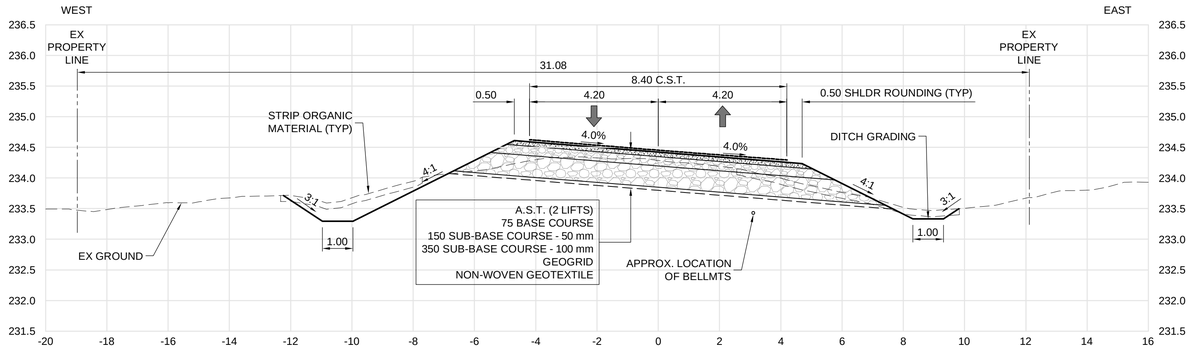

A 02 18 SECTION - STA. 1+205
SCALE: H=1:100, V=1:50

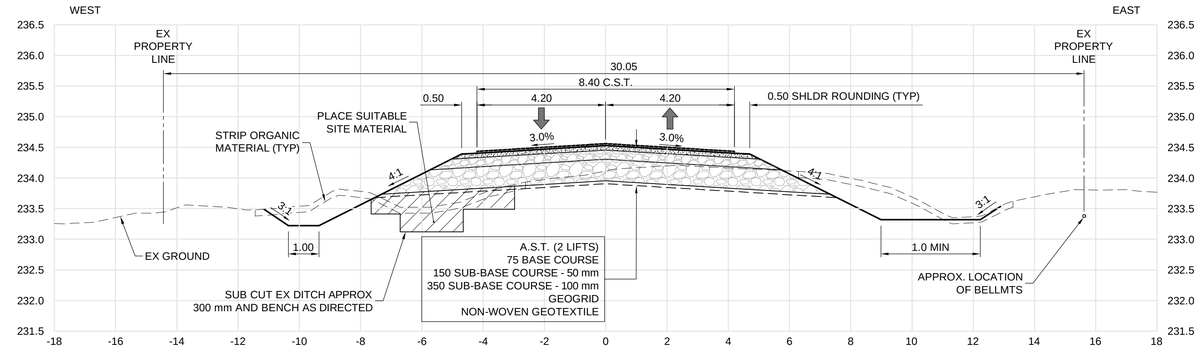

B 02 18 SECTION - STA. 1+280
SCALE: H=1:100, V=1:50

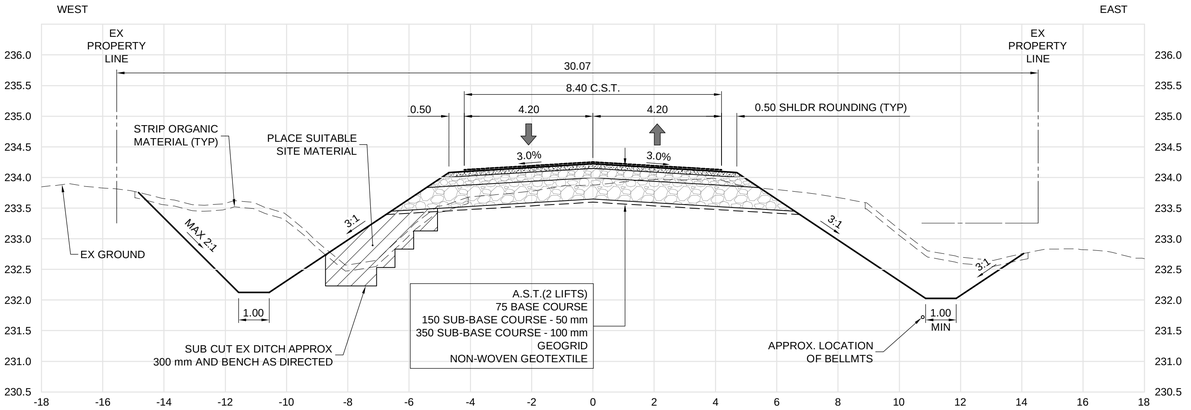

C 04 18 SECTION - STA. 1+800
SCALE: H=1:100, V=1:50

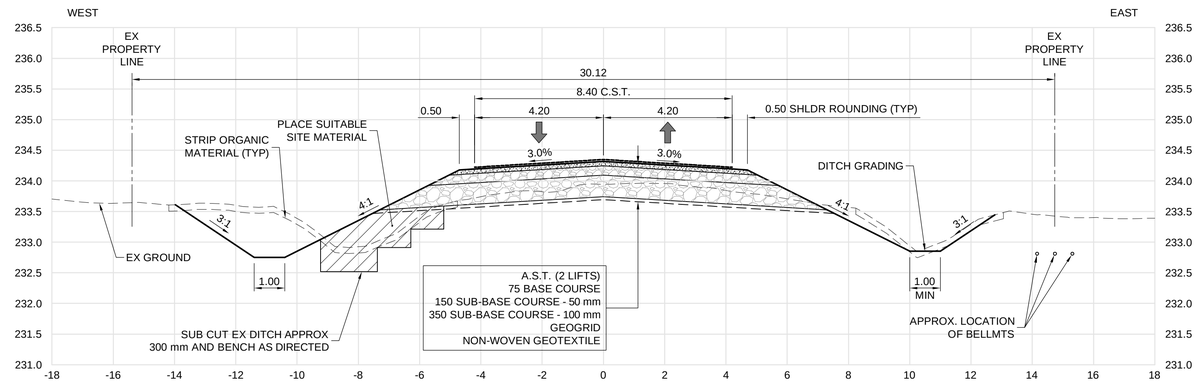

D 05 18 SECTION - STA. 2+250
SCALE: H=1:100, V=1:50

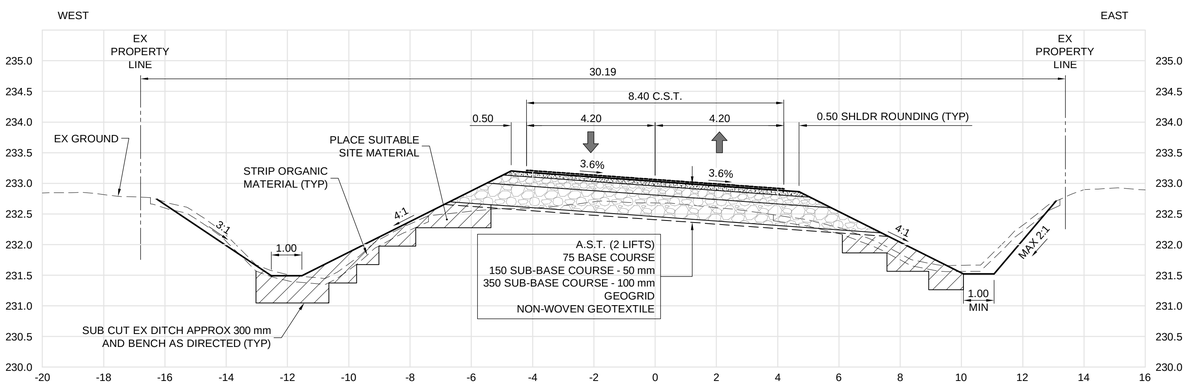

E 14 18 SECTION - STA. 5+240
SCALE: H=1:100, V=1:50

APEGM
Certificate of Authorization
Dillon Consulting Limited (MB)
No. 1789 Date: 2019/05/28

PRELIMINARY ONLY
NOT FOR CONSTRUCTION

UNDERGROUND STRUCTURES

SUPV. U/G STRUCTURES DATE

LOCATION OF UNDERGROUND STRUCTURES AS SHOWN ARE BASED ON THE BEST INFORMATION AVAILABLE, BUT NO GUARANTEE IS GIVEN THAT ALL EXISTING UTILITIES ARE SHOWN OR THAT THE GIVEN LOCATIONS ARE EXACT. CONFIRMATION OF EXISTENCE AND EXACT LOCATION OF ALL SERVICES MUST BE OBTAINED FROM THE INDIVIDUAL UTILITIES BEFORE PROCEEDING WITH CONSTRUCTION.

B.M. ELEV.

NO.	REVISIONS	DATE	BY
0	ISSUED FOR TENDER	19/05/28	BC

DESIGNED BY RTP
DRAWN BY TJH
CHECKED BY TS
APPROVED BY BC
HOR. SCALE 1:100
VERTICAL 1:50
DATE

DILLON CONSULTING

RELEASED FOR CONSTRUCTION
DATE

ENGINEER'S SEAL
PROVINCE OF MANITOBA
ORIGINAL STAMPED BY
S.B. COOK
2019/05/28
REGISTERED PROFESSIONAL ENGINEER

CONSULTANT PROJECT NUMBER
18-8859

Winnipeg
THE CITY OF WINNIPEG
PUBLIC WORKS DEPARTMENT

2019 GRANULAR ROAD PROGRAM
WAVERLEY STREET
(GRANDMONT BOULEVARD TO CITY LIMIT)

SECTIONS

CITY DRAWING NUMBER P-3506-2019-18
SHEET 18 OF 18
CONSULTANT DRAWING NUMBER

G:\CAD\188859\Drawings\Roadworks\Contract1\188859-CON-SECTIONS.dwg