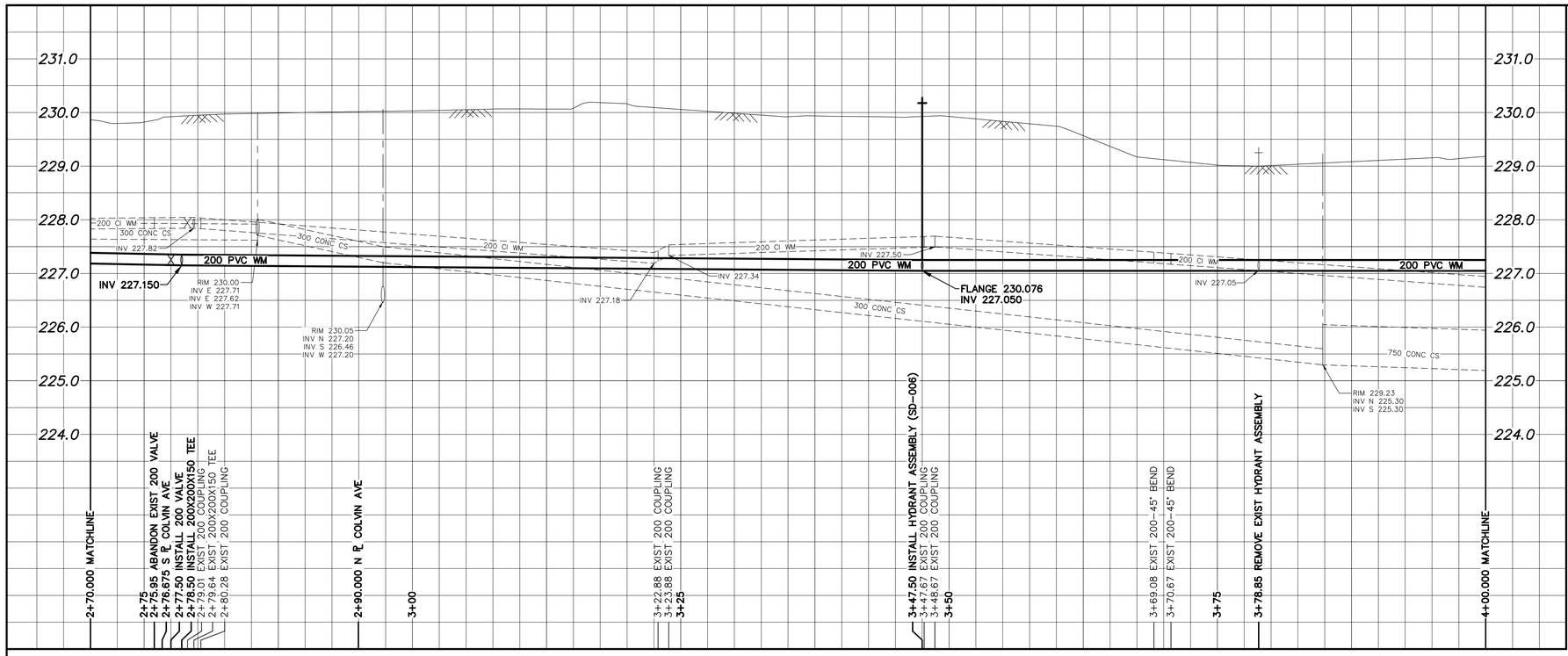

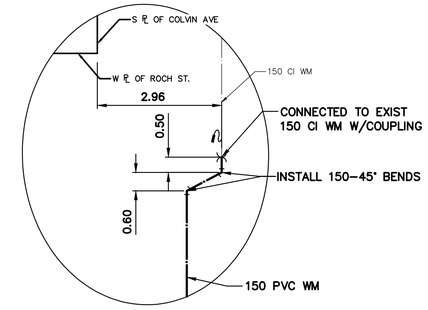

DETAIL "A"
SCALE N.T.S.

NOTE: CHAINAGES SHOWN ARE ALONG E. ℄ OF ROCH STREET

ROCH STREET

COLVIN AVE

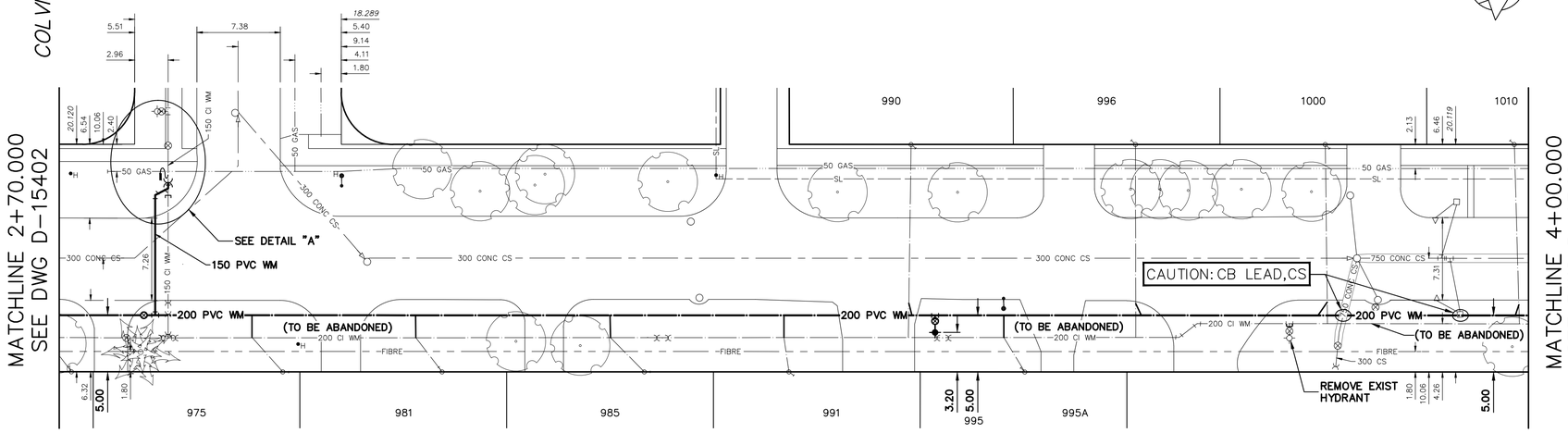

WATER SERVICE INFORMATION

ADDRESS	SIZE (mm) MATERIAL (STREET)	SIZE (mm) MATERIAL (PROP.)	SHORT & LONG MEASUREMENT	CORP. LOCATION	REMARKS
971 ROCH ST RESIDENTIAL	25 CU	25 CU	1.00 NNL HSE 23.670 SNL COLVIN AVE	2.3 S OF S/C	RECONNECT SERVICE –
975 ROCH ST RESIDENTIAL	20 CU	20 CU	OPP NL HSE 13.333 NNL COLVIN AVE	2.7 S OF S/C	RECONNECT SERVICE –
981 ROCH ST RESIDENTIAL	20 CU	20 CU	3.65 NSL HSE 9.169 NNL COLVIN AVE	2.4 S OF S/C	RECONNECT SERVICE –
985 ROCH ST RESIDENTIAL	20 CU	20 CU	4.66 SNL HSE 27.075 NNL COLVIN AVE	2.9 S OF S/C	RECONNECT SERVICE –
990 ROCH ST RESIDENTIAL	25 CU	25 CU	8.50 NSL HSE 49.421 NNL COLVIN AVE	OPP OF S/C	RECONNECT SERVICE –
991 ROCH ST RESIDENTIAL	25 CU	25 CU	4.58 NSL HSE 67.077 EEL ROTHESAY ST	0.5 S OF S/C	RECONNECT SERVICE –
995 ROCH ST RESIDENTIAL	20 CU	20 CU	2.63 SNL HSE 60.072 NNL COLVIN AVE	1.8 S OF S/C	RECONNECT SERVICE –
995A ROCH ST RESIDENTIAL	20 CU	20 CU	2.63 SNL HSE 60.072 NNL COLVIN AVE	1.8 S OF S/C	RECONNECT SERVICE –
996 ROCH ST RESIDENTIAL	20 CU	20 CU	9.70 NSL HSE 70.257 NNL COLVIN AVE	OPP OF S/C	RECONNECT SERVICE –
1000 ROCH ST SPRINKLER	20 CU	20 CU	8.71 NSL HSE 87.087 NNL COLVIN AVE	OPP OF S/C	RECONNECT SERVICE –
1010 ROCH ST SPRINKLER	20 CU	20 CU	5.70 NSL HSE 103.831 NNL COLVIN AVE	OPP OF S/C	RECONNECT SERVICE –
1020 ROCH ST SPRINKLER	20 CU	20 CU	6.45 NSL HSE 125.989 NNL COLVIN AVE	1.7 N OF S/C	RECONNECT SERVICE –
1030 ROCH ST RESIDENTIAL	20 CU	20 CU	7.28 NSL HSE 118.135 SSL MCLEOD AVE	1.8 N OF S/C	RECONNECT SERVICE –
1040 ROCH ST RESIDENTIAL	20 CU	20 CU	6.58 NSL HSE 100.647 SSL MCLEOD AVE	2.9 N OF S/C	RECONNECT SERVICE –
1050 ROCH ST RESIDENTIAL	20 CU	20 CU	3.06 NSL HSE 84.407 SSL MCLEOD AVE	4.3 N OF S/C	RECONNECT SERVICE –
1060 ROCH ST COMMERCIAL	– –	20 CU	7.96 NSL HSE 60.356 SSL MCLEOD AVE	–	RECONNECT SERVICE –
1065 ROCH ST RESIDENTIAL	– –	20 CU	1.20 SNL HSE 58.750 SSL MCLEOD AVE	–	RECONNECT SERVICE –
1069 ROCH ST RESIDENTIAL	– –	20 CU	OPP NL HSE 44.254 SSL MCLEOD AVE	–	RECONNECT SERVICE –
1070 ROCH ST RESIDENTIAL	20 CU	20 CU	6.21 NSL HSE 47.885 SSL MCLEOD AVE	OPP OF S/C	RECONNECT SERVICE –
398 MCLEOD AVE RESIDENTIAL	20 CU	20 CU	3.28 SNL HSE 13.431 SSL MCLEOD AVE	0.4 S OF S/C	RECONNECT SERVICE –
402 MCLEOD AVE RESIDENTIAL	20 CU	20 CU	3.80 EEL HSE 15.799 EEL ROSH ST	0.6 S OF S/C	SERVICED OFF ROCH ST –

* SERVICES TO BE RENEWED TO ℄. ALL OTHERS TO BE RECONNECTED

FOR INDEX SEE D-15396

NOTE: ALL VALVES TO BE INSTALL COUNTERCLOCKWISE TO CLOSE

METRIC
WHOLE NUMBERS INDICATE MILLIMETRES
DECIMALIZED NUMBERS INDICATE METRES
0.0 5.0 10.0 15.0 20.0 25.0

WARNING

IF POWER EQUIPMENT OR EXPLOSIVES ARE TO BE USED FOR EXCAVATION ON THIS PROJECT THE CONTRACTOR MUST:

1) NOTIFY THE GAS COMPANY OF THE PROPOSED LOCATION OF EXCAVATION.

2) TAKE PRECAUTION TO AVOID DAMAGE TO GAS COMPANY INSTALLATIONS.

SEE PROVINCIAL REGULATION 210/72 FOR DETAILS

LOCATION APPROVED
UNDERGROUND STRUCTURES

SUPV. U/G STRUCTURES COMMITTEE — DATE

NOTE:
LOCATION OF UNDERGROUND STRUCTURES AS SHOWN ARE BASED ON THE BEST INFORMATION AVAILABLE BUT NO GUARANTEE IS GIVEN THAT ALL EXISTING UTILITIES ARE SHOWN OR THAT THE GIVEN LOCATIONS ARE EXACT. CONFIRMATION OF EXISTENCE AND EXACT LOCATION OF ALL SERVICES MUST BE OBTAINED FROM THE INDIVIDUAL UTILITIES BEFORE PROCEEDING WITH CONSTRUCTION.

B.M.
ELEV.

NO.	REVISIONS	DATE	BY

DESIGNED BY	MJK	CHECKED BY	SC
DRAWN BY	RS	APPROVED BY	KZ
SCALE: HORIZONTAL	1:250	RELEASED FOR CONSTRUCTION	K.ZUREK
VERTICAL	1:50		
DATE	2019 03 26	DATE	2019-03-25

PLOT DATE: 2019 03 26

ENGINEER'S SEAL
ORIGINAL SIGNED BY S.R.J. COURNOYER 19/03/25

CONSULTANT DRAWING NUMBER
–

Winnipeg

THE CITY OF WINNIPEG
WATER AND WASTE DEPARTMENT
ENGINEERING DIVISION

2019 WATER MAIN RENEWALS
CONTRACT 9

ROCH STREET
71 N OF FEARN AVENUE TO
110 N OF COLVIN AVENUE

SHEET 9 OF 12

CITY DRAWING NUMBER
D-15403

BID OPPORTUNITY: 190-2019
CONTRACT NUMBER: 9

FILE PATH: R:\DRAWINGS\WATER\RENEWAL\2019 RENEWALS\Contract 9\Construction dwgs\
FILE NAME: ROCH AVE.dwg