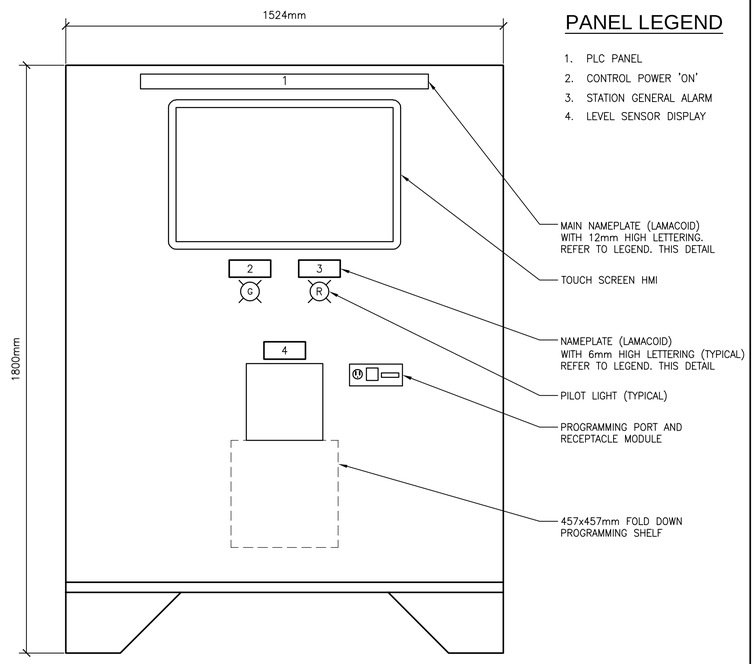

PANEL LEGEND

1. PLC PANEL
2. CONTROL POWER 'ON'
3. STATION GENERAL ALARM
4. LEVEL SENSOR DISPLAY

PLC CONTROL PANEL - PROPOSED LAYOUT

SCALE: N.T.S.

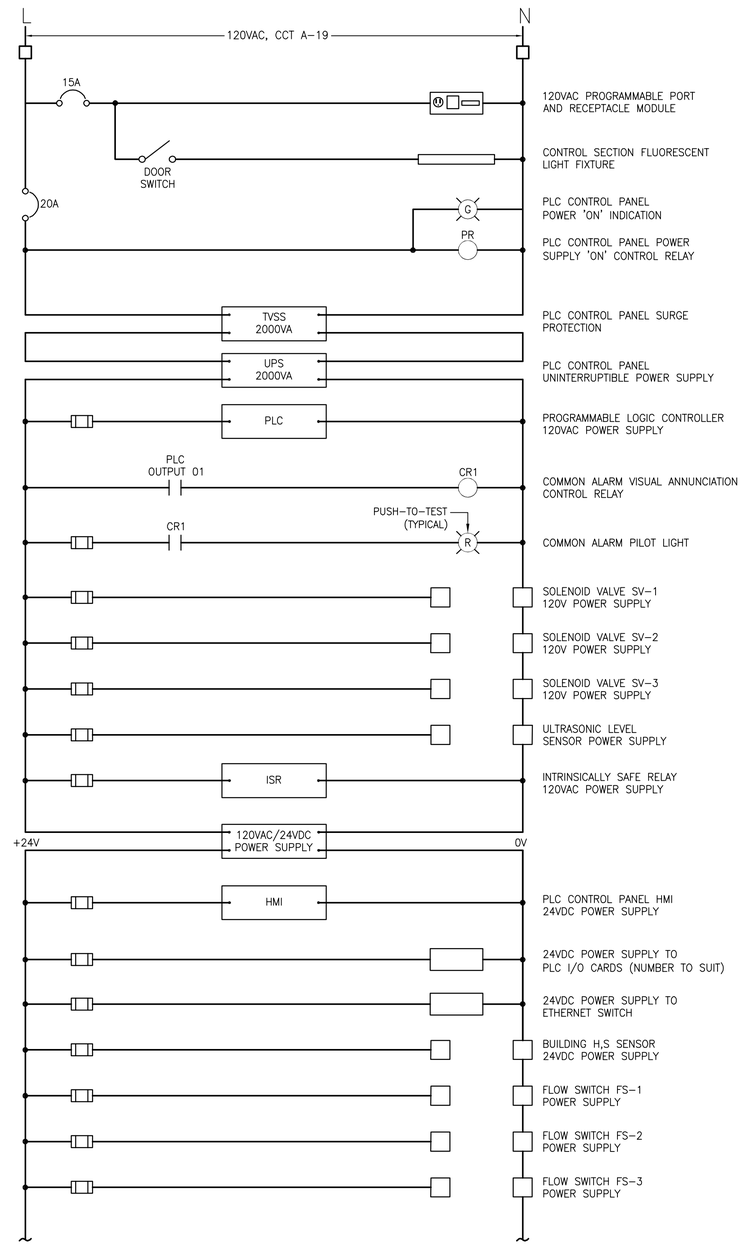

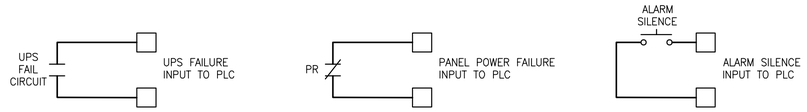

PLC CONTROL PANEL - WIRING DIAGRAM

SCALE: N.T.S.

APEGM
Certificate of Authorization
Tower Engineering Group
No. 4156 Expiry: April 30, 2020

METRIC
WHOLE NUMBERS INDICATE MILLIMETRES
DECIMALIZED NUMBERS INDICATE METRES

TOWER PROJECT NO. : 181654
TOWER ENGINEERING GROUP
UNIT 1-1140 WAVERLEY ST. WINNIPEG, MB R3T 0P4
TEL: (204) 925-1150 FAX: (204) 925-1155
EMAIL: towereng@towereng.ca WEB: www.towereng.ca
• WINNIPEG • CALGARY

These design documents are prepared solely for the use by the party with whom the design professional has entered into a contract and there are no representations of any kind made by the design professional to any party with whom the design professional has not entered into a contract. Any use of the drawing, disk or electronic data without the expressed written permission of Tower Engineering Inc. is strictly prohibited. The contractor is responsible to verify all dimensions with conditions on the site and report discrepancies to Tower Engineering for adjustment. All prints to be returned.

WARNING

IF POWER EQUIPMENT OR EXPLOSIVES ARE TO BE USED FOR EXCAVATION ON THIS PROJECT THE CONTRACTOR MUST:

1) NOTIFY THE GAS COMPANY OF THE PROPOSED LOCATION OF EXCAVATION.

2) TAKE PRECAUTION TO AVOID DAMAGE TO GAS COMPANY INSTALLATIONS.

SEE PROVINCIAL REGULATION 210/72 FOR DETAILS

LOCATION APPROVED
UNDERGROUND STRUCTURES

SUPV. U/G STRUCTURES COMMITTEE — DATE

NOTE:

LOCATION OF UNDERGROUND STRUCTURES AS SHOWN ARE BASED ON THE BEST INFORMATION AVAILABLE BUT NO GUARANTEE IS GIVEN THAT ALL EXISTING UTILITIES ARE SHOWN OR THAT THE GIVEN LOCATIONS ARE EXACT. CONFIRMATION OF EXISTENCE AND EXACT LOCATION OF ALL SERVICES MUST BE OBTAINED FROM THE INDIVIDUAL UTILITIES BEFORE PROCEEDING WITH CONSTRUCTION.

B.M.
ELEV.

CONSTRUCTION COMPLETION DATE: YYYY MM DD

NO.	REVISIONS	DATE	BY
3	ISSUED FOR TENDER	2019 05 27	DKG
2	ISSUED FOR 99% REVIEW	2019 05 09	DKG
1	ISSUED FOR 66% REVIEW	2019 04 17	DKG

NEEGAN BURNSIDE
Neegan Burnside Limited
307 Commerce Drive
Winnipeg, Manitoba, R3P 1B3
telephone (204) 949-7110
fax (204) 949-7111
web www.neeganburnside.com

DESIGNED BY	DKG	CHECKED BY	DKG
DRAWN BY	VRR	APPROVED BY	DKG
SCALE: HORIZONTAL / VERTICAL	N.T.S.	RELEASED FOR CONSTRUCTION	
DATE	2019 04 15	DATE	

PLOT DATE: 2019-05-27

ENGINEER'S SEAL

CONSULTANT DRAWING NUMBER
E-07

TENDER NO. 269-2019
CONTRACT NUMBER: X

Winnipeg

THE CITY OF WINNIPEG

WATER AND WASTE DEPARTMENT
ENGINEERING DIVISION

MISSION FPS UPGRADES

PLC WIRING DIAGRAM

SHEET OF

CITY DRAWING NUMBER
1-0163F-E0008-001

FILE PATH: T:\181000\181654 C Of W Mission Flood Pumping Station\16000 Electrical\11 Drawings\Working Drawings
FILE NAME: 181654 – E-07 PLC Wiring Diagram