APPENDIX ‘E’

HYDRAULIC REPORT

Quality Engineering | Valued Relationships

City of Winnipeg

Omands Creek at Dublin Avenue Crossing Replacement Hydrologic and Hydraulic Assessment (Rev1)

Prepared for:

Mike Boissonneault, P.Eng.
Principal, BCSL
Project Manager
Stantec Consulting Limited

Project Number:
0028 007 01

Date:
November 28, 2018

www.trekgeotechnical.ca
1712 St. James Street | Winnipeg, Manitoba R3H 0L3 | Tel 1.204.975.9433 | Fax 1.204.975.9435

TREK GEOTECHNICAL

Quality Engineering | Valued Relationships

November 28, 2018

Our File No. 0028 007 00

Mr. Mike Boissoneault, P.Eng.
Principal, BCSL
Project Manager
Stantec Consulting Limited
500-311 Portage Avenue
Winnipeg, MB
R3B 2B9

RE: Omands Creek at Dublin Avenue - Crossing Replacement
Hydrologic and Hydraulic Assessment - REV 1

TREK Geotechnical Inc. is pleased to submit our Final Report for the Hydrologic and Hydraulic Assessment for the above noted project.

Please contact the undersigned if you have any questions. Thank you for the opportunity to serve you on this assignment.

Sincerely,

TREK Geotechnical Inc.
Per:

Jim Friesen, P.Eng
Manager, Water Resources Engineering
Tel: 204.975.9454

Encl.

Revision History

Revision No.	Author	Issue Date	Description
0	BH	July 19, 2018	DRAFT Report
1	BH	November 28, 2018	Final Report

Authorization Signatures

Prepared By:

Bruce Harding, P.Eng.
Senior Water Resource Engineer

PROVINCE OF MANITOBA
W.B.J. HARDING
Nov. 28, 2018
REGISTERED PROFESSIONAL ENGINEER

Reviewed By:

Jim Friesen, P.Eng.
Manager, Water Resources Engineering

ENGINEERS GEOSCIENTISTS MANITOBA
Certificate of Authorization
TREK GEOTECHNICAL INC.
No. 4877 Date: Nov 28 18

Table of Contents

Letter of Transmittal

Revision History and Authorization Signatures

1.0 Introduction 1

2.0 Hydrology 2

2.1 Flood Hydrology 2

2.2 Fish Passage Discharge 3

3.0 Hydraulic Assessment - Existing Conditions 4

4.0 Hydraulic Assessment - Proposed Replacement Crossings 6

4.1 General 6

4.2 Hydraulic and Regulatory Design Criteria 6

4.3 Replacement Structure Options 7

5.0 Other Considerations 16

6.0 Closure 17

Figures

Site Photos

List of Appendices

Appendix A Summary Table of Frequency Flow Results
Omands Creek - WSC Gauge 05MJ007

Appendix B Fish Habitat Classification Map

1.0 Introduction

This report summarizes the results of our hydrologic analysis and hydraulic assessment of a replacement crossing of Omands Creek by Dublin Avenue in the City of Winnipeg, Manitoba. The location of the site is indicated on Figure 1. The existing three span timber and concrete bridge has been judged by others to require replacement as the structure has reached the end of its service life.

Pertinent features of the site are as follows:

- Jurisdiction - City of Winnipeg
- Watercourse - Omands Creek
- Flow Direction - South
- Designation of Drain Map - No. 26
- UTM Coordinates - 629573E, 5530331N (Zone 14)
- Total Drainage Area - 73 km^2

Six options for the crossing replacement have been provided for assessment as follows:

- reinforced concrete box culvert (2 configurations)
- clear span bridge (2 configurations).
- solid slab bridge (2 configurations)

Additional details with respect to the hydrologic assessment and the hydraulic sizing of the replacement structure options are summarized in the following sections.

2.0 Hydrology

2.1 Flood Hydrology

The contributing drainage area of Omands Creek to the Dublin Avenue Bridge is approximately 73 km^2. Flood estimates for Omands Creek were developed by Manitoba Water Stewardship in 2017 from frequency analyses of historical streamflows recorded within Omands Creek and correlated streamflows from an adjacent watershed. The flood estimates at the upstream Omands Creek streamflow gauge (Omands Creek at Metro Route 90 – WSC 05MJ007), can be assumed to reflect the hydrology at the Dublin Avenue crossing due to the proximity and limited increase in drainage area. The flood estimates for the mean daily discharge (MD) are summarized in Table 1.

The hydrology for Omands Creek has been updated subsequent to recent crossing replacement studies on Omands Creek at St James Avenue, Saskatchewan Avenue, St Matthews Avenue and Sargent Avenue. The updated hydrology would indicate that there is a reduction in the magnitude of the flood peak. For example, the 2% discharge (2008 estimate) used as the design discharge for previous crossing replacement studies was estimated as 20.5 m^3/s, relative to the more recent estimate of 15.8 m^3/s, which equates to a 23% reduction in discharge. The updated 2% discharge of 15.8 m^3/s will be selected as the design discharge, however the previous (2008) 2% design discharge estimate of 20.5 m^3/s will also be assessed for consistency with the recently replaced crossings on Omands Creek.

An estimate of the 1% flood, taking into consideration future development within the City of Winnipeg, was developed as part of the 1987 Flood Risk Mapping Study undertaken by Manitoba Water Stewardship (formerly Water Resources Branch). This 1% flood (1% flood future) estimate was selected as the design discharge for several recently constructed replacement crossings and new crossings located in the lower reach of Omands Creek. The discharge equates to a 0.5% discharge based on the current flood frequency relationship. Note however that this discharge is theoretical in nature and in fact would exceed the current conveyance capacity of the creek within the reach upstream and downstream of the Dublin Avenue crossing. High flows are unachievable within this reach of the creek as flows exceed the creek banks with resultant breakout. a It is estimated that flows are contained to the creek for discharges up to approximately a 5% event. Therefore, the actual flow reaching the Dublin Avenue Bridge would in fact be lower for a specific probability due to breakouts and overland flows from the creek.

Manitoba Infrastructure (MI) – Water Management and Structures has interest in this hydraulic structure since it crosses a waterway designated as a provincial drain. MI requested that hydraulic analysis of the bridge should include the instantaneous peak flow (IP) for the 2% (50 year flow).

2.2 Fish Passage Discharge

If a watercourse is considered fish habitat, then a crossing of the watercourse should not restrict upstream fish passage during a spawning migration period for flows up to a specified fish passage discharge. Omands Creek within this reach is considered fish habitat, therefore the velocities within the proposed replacement crossing(s) will be assessed for fish passage. The spring migration period is considered the critical period for this site on the basis of the large bodied indicator species (northern pike, sucker, etc.) that may exist within the waterway. The spawning migration period was assumed to extend from April 1 to May 31 (Table 4 of the fisheries guidelines).

The fish passage discharge is normally estimated from the results of frequency analyses that consider the streamflow for each year that corresponds to the *largest streamflow that is equalled or exceeded for 3 consecutive days during the spawning migration period*. The 3-day delay discharge with a 10% probability (3DQ10) of exceedance is typically selected as the fish passage discharge. The 3DQ10 was derived from an analysis of streamflow records for Omands Creek by MI within the specified spring migration period. The 3DQ10 at the Dublin Avenue site has been estimated as 7.2 m^3/s.

Table 1
Omands Creek at Dublin Avenue
Flood Hydrology

Discharge Event	Omands Creek - WSC 05MJ007	
	Mean Daily Discharge (m^3/s)	Instantaneous Peak Discharge (m^3/s)
50%	3.8	4.8
20%	7.0	8.5
10%	9.4	11.3
5%	12.0	14.3
3%	14.0	16.5
2% (Design Discharge)	15.8	18.6
1%	19.0	22.2
3DQ10	7.2	NA
2% Discharge (2008) [1]	20.5	NA
1% (Future) [2]	32.6	NA

1 2008 Discharge Estimate from Manitoba Water Stewardship
2 Flood Risk Mapping Study, Water Resources Branch, 1987

3.0 Hydraulic Assessment - Existing Conditions

The existing bridge crossing of Omands Creek is a three span 18.1 m long timber and concrete bridge structure. The City of Winnipeg has judged that the bridge structure requires replacement as the structure has reached the end of its service life.

Omands Creek within the reach near the bridge site is an engineered linear channel, with some natural channel features and form. The channel side slopes are vegetated with grasses and small bushes. The channel grade within the reach of the creek near Dublin Avenue is approximately 0.085%. Photographs are appended for reference. Channel work was completed downstream of Dublin Avenue to Saskatchewan Avenue over approximately 500 m (2013/2014) to remove contaminated soils. The downstream channel geometry appears larger than original, with the channel invert excavated lower relative to the overall Omands Creek channel grade.

A steady-state backwater model of Omands Creek within the crossing reach was developed to assess the hydraulic conditions of the waterway, the existing upstream and downstream crossings and the proposed replacement crossing at Dublin Avenue. The backwater model extends approximately 3700 m upstream from the BNSF railway crossing (near Portage Avenue) to Border Street. The backwater model was originally developed to assess the hydraulics of the Saskatchewan Avenue crossing replacement[1] and several other crossing replacements including St James Avenue, Sargent Avenue and St Matthews Avenue. The hydraulic analysis for this reach of Omands Creek was undertaken using the US Army Corps of Engineers, Hydrologic Engineering Centre River Analysis System (HEC-RAS) software. The HEC-RAS model is a one-dimensional backwater model, which is considered to be the universal standard for computing steady-state water surface profiles. The backwater model for this reach of the creek was developed using cross-sections, channel profiles and details of the crossings surveyed as part of the 1987 Flood Risk Mapping Study, by Dillon Engineering in 2007, 2008 and 2013, by Morrison Hershfield in February 2015 and by TREK/GDS Surveys in July 2018.

The backwater model has been developed to the level of detail required to estimate the relative effect of the proposed crossing. The model has not been calibrated to observed water levels during periods of high flow, and hydraulic parameters such as channel roughness have been selected based on observations, engineering judgement and experience gained from similar projects.

1 "Omands Creek at Saskatchewan Avenue, Crossing Replacement, Hydrologic Summary and Hydraulic Assessment", September 17, 2015, Bruce Harding Consulting

The estimated water surface profiles for Omands Creek within the study area under existing conditions (circa July 2018), with the existing Dublin Avenue Bridge are shown on Figure 2. Table 2 summarizes the hydraulic assessment for the existing bridge.

Table 2
Omands Creek at Dublin Avenue
Hydraulic Summary for Existing Three Span Bridge

Probability	Discharge (m^3/s)	Water Level Downstream of Crossing (m)	Water Level Upstream of Crossing (m)	Headloss (m)	Clearance to Underside of Girder * (m)	Bridge Opening Velocities (m/s)
50% MD	3.8	232.54	232.56	<0.05	1.15	0.4 - 0.5
20% MD	7.0	232.88	232.90	<0.05	0.81	0.5 - 0.6
10% MD	9.4	233.09	233.12	<0.05	0.59	0.5 - 0.65
5% MD	12.0	233.30	233.33	<0.05	0.38	0.55 - 0.70
3% MD	14.0	233.46	233.48	<0.05	0.23	0.6 - 0.7
2% MD	15.8	233.61	233.63	<0.05	0.08	0.6 - 0.7
1% MD	19.0	233.85	233.88	<0.05	0.17 Submerged	0.7 - 0.8
3DQ10	7.2	232.90	232.92	<0.05	0.79	0.5 - 0.6
2% IP	18.6	232.82	233.85	<0.05	0.14 Submerged	0.65 - 0.75
2% Discharge (2008)	20.5	233.96	233.99	<0.05	0.28 Submerged	0.75 - 0.85
1% (Future)	32.6	234.66	234.70	<0.05	0.99 Submerged **	0.85 - 0.9

* - underside of girder (existing) at approximately el 233.71 m
** - Roadway overtopped

4.0 Hydraulic Assessment - Proposed Replacement Crossings

4.1 General

Bridge structures and large box culvert structures were considered and recommended for this location due to site geometry and the flow conditions observed at this location. Typically clear span bridge structures are preferred as the structure spans the main channel, eliminating a centre pier which minimizes environmental and debris collection concerns.

The preference for replacement of the structure would be to limit raising the existing profile of Dublin Avenue to minimize the disruption to existing road approaches. Maintaining the existing road profile may result in girder or soffit submergence at the design discharge, however this has been judged to be permissible (within reason) at this location due to the existing hydraulic conditions.

4.2 Hydraulic and Regulatory Design Criteria

The hydraulic design criterion selected for the replacement crossing is as follows:

- Design discharge – 2%.
- Maximum headloss of 0.21m (Provincial Waterway standard) during the passage of the design discharge.
- Bridge opening/culvert velocities less than 1.5 m/s for discharges up to the design discharge
- Underside of girder elevation or culvert soffit to remain approximately above water surface during passage of design discharge. (Short duration submergence has been authorized at this location, due to existing conditions)

A maximum permissible fish passage velocity of 0.6 m/s during the passage of the 3-day delay –10% fish passage discharge (3DQ10) has been selected for culvert type structures. Note that the limiting velocity requirement is typically only applied to culvert type structures and not bridge structures, therefore for this assessment the requirement will only be considered for the box culvert and rigid frame structure options. The fish passage velocity requirement has been selected on the basis of the standards selected for other nearby new and replacement crossings over Omands Creek to maintain consistency between locations. For the box culvert options, the invert of the culvert has been set approximately 0.3 m below the bottom of the creek and will be backfilled with a minimum 0.3 m thickness of granular/rock substrate to the streambed elevation.

Omands Creek has been judged to be non-navigable by Transport Canada; therefore, no provisions under the Navigable Waters Act are required for this proposed crossing.

The underside of girder/soffit clearance requirement is based on; minimizing the collection of debris or ice on the upstream side which has the potential to plug the structure, or to ensure that lateral forces acting on the bridge are not excessive. Large debris or large ice runs capable of blocking the hydraulic opening however are limited in the creek and are therefore not of great concern with respect to the design. On that basis, some girder or soffit submergence is permissible at the design discharge.

4.3 Replacement Structure Options

Six replacement structure options have been assessed, including two box culvert options, two clear span bridge options and two solid slab bridge options. The options assessed are as follows:

Option 1A – Concrete Box Culvert

The proposed option 1A replacement structure for this site is as follows:

- Triple 2.7 wide by 2.9 high x approximately 24.6 m long reinforced concrete box culvert.
- The road would be raised by approximately 0.2 m from elevation 234.30 to approximately elevation 234.50. The box culvert configuration will follow typical construction, however the top slab would be used to provide the base of the roadway.
- Culvert invert set level at 231.10 with 0.3 m thickness of Class 350 rock placed on the culvert invert.
- Culvert soffit would be set at elevation 234.00, which is approximately 0.3 m higher than the existing underside of girder elevation, providing the required freeboard at the design discharge.
- Culvert constructed without skew on existing road alignment.
- Rock aprons will be required at the culvert ends, which should be armoured with Class 350 Riprap placed 0.55 m thick placed over non-woven geotextile. Rock aprons would be constructed with a 9.0 base width set at el 231.40. Rock aprons to extend a minimum of 3 m from the upstream and downstream face of the headwalls.
- The creek will require excavation local to the crossing to permit the transition from the creek to the bridge. The transition should extend over a minimum length of 5 m downstream from the limits of the downstream rock apron and 10 m upstream from the limits of the upstream rock apron.
- Refer to the upstream elevation sketch for the proposed replacement crossing structure on Figure 3.

The backwater model of Omands Creek was modified to incorporate the proposed replacement crossing structure. The estimated water surface profiles for Omands Creek, with the proposed box culvert structure, are shown on Figure 4 while Table 3 summarizes the hydraulic assessment.

Table 3
Omands Creek at Dublin Avenue
Hydraulic Summary for Option 1A - Triple Cell Box Culvert 2.7 wide x 2.9 high

Probability	Discharge (m^3/s)	Water Level Downstream of Crossing (m)	Water Level Upstream of Crossing (m)	Headloss (m)	Clearance to Soffit* (m)	Culvert Velocities (m/s)
50% MD	3.8	232.54	232.55	<0.05	1.45	0.4
20% MD	7.0	232.89	232.90	<0.05	1.10	0.6
10% MD	9.4	233.10	233.11	<0.05	0.89	0.7
5% MD	12.0	233.31	233.32	<0.05	0.68	0.8
3% MD	14.0	233.47	233.48	<0.05	0.52	0.85
2% MD	15.8	233.62	233.63	<0.05	0.37	0.9
1% MD	19.0	233.86	233.87	<0.05	0.13	0.95
3DQ10	7.2	232.90	232.91	<0.05	0.8	0.6
2% IP	18.6	233.82	233.84	<0.05	0.16	0.95
2% Discharge (2008)	20.5	233.96	233.97	<0.05	0.03	1.0
1% (Future)	32.6	234.66	234.74	0.12	0.74 submerged	1.55

* - culvert soffit (proposed) set at el 234.00 m

Option 1B – Concrete Box Culvert

The proposed option 1B replacement structure for this site is as follows:

- Triple 2.7 wide by 2.61 high x approximately 24.6 m long reinforced concrete box culvert.
- The existing road profile would be retained. The box culvert configuration will follow typical construction, however the top slab would be used to provide the base of the roadway.
- Culvert invert set level at 231.10 with 0.3 m thickness of Class 350 rock placed on the culvert invert.
- Culvert soffit would be set at elevation 233.71, which is approximately equal to the existing underside of girder elevation. A further reduction in soffit elevation below the existing underside of girder elevation is not recommended. The 0.3 m freeboard requirement at the 2% discharge has not been achieved, however the soffit remains clear of the water surface profile (0.08 m), which would be judged to be acceptable at this location.
- Culvert constructed without skew on existing road alignment.
- Rock aprons will be required at the culvert ends, which should be armoured with Class 350 Riprap placed 0.55 m thick placed over non-woven geotextile. Rock aprons would be constructed with a 9.0 base width set at el 231.40. Rock aprons to extend a minimum of 3 m from the upstream and downstream face of the headwalls.

- The creek will require excavation local to the crossing to permit the transition from the creek to the bridge. The transition should extend over a minimum length of 5 m downstream from the limits of the downstream rock apron and 10 m upstream from the limits of the upstream rock apron.
- Refer to the upstream elevation sketch for the proposed replacement crossing structure on Figure 5.

The backwater model of Omands Creek was modified to incorporate the proposed replacement crossing structure. The estimated water surface profiles for Omands Creek, with the proposed box culvert structure, are shown on Figure 6 while Table 4 summarizes the hydraulic assessment.

Table 4
Omands Creek at Dublin Avenue
Hydraulic Summary for Option 1B - Triple Cell Box Culvert 2.7 wide x 2.61 high

Probability	Discharge (m^3/s)	Water Level Downstream of Crossing (m)	Water Level Upstream of Crossing (m)	Headloss (m)	Clearance to Soffit* (m)	Culvert Velocities (m/s)
50% MD	3.8	232.54	232.55	<0.05	1.16	0.4
20% MD	7.0	232.89	232.90	<0.05	0.81	0.6
10% MD	9.4	233.10	233.11	<0.05	0.6	0.7
5% MD	12.0	233.31	233.32	<0.05	0.39	0.8
3% MD	14.0	233.47	233.48	<0.05	0.23	0.85
2% MD	15.8	233.62	233.63	<0.05	0.08	0.9
1% MD	19.0	233.86	233.88	<0.05	0.17 submerged	1.0
3DQ10	7.2	232.90	232.91	<0.05	0.8	0.6
2% IP	18.6	233.82	233.85	<0.05	0.14 submerged	1.0
2% Discharge (2008)	20.5	233.96	233.99	<0.05	0.28 submerged	1.1
1% (Future)	32.6	234.66	234.81	0.09	0.78 submerged & overtopped	1.75

* - culvert soffit (proposed) set at el 233.71 m

Option 2A – 16.5 m Long Clear Span Bridge

The proposed clear span bridge option (2A) for this site is as follows:

- Replace existing bridge with a new 16.5 m long by approximately 20 m wide (to match existing bridge width) clear span concrete bridge founded on piled concrete abutments.
- Underside of girder set at the elevation of the existing bridge underside of girder elevation of 233.71. A reduction in underside of girder elevation from existing is not recommended.
- Bridge constructed without skew on existing road alignment.
- The road would be raised by approximately 0.55 m from elevation 234.30 to approximately elevation 234.85.
- Place rock armouring within the bridge opening with 4:1 headslopes, a 2.0 m base width and the channel base set at el 231.40. The rock armouring should extend 3 m upstream and downstream of the outside faces of the bridge structure, wrapping around the abutment and extending up to approximately el 234.0. The rock armouring would consist of a 0.55 m thickness of Class 350 rock placed over non-woven geotextile.
- The creek will require excavation local to the crossing to permit the transition from the creek to the bridge. The transition should extend over a minimum length of 5 m downstream from the limits of the downstream rock apron and 10 m upstream from the limits of the upstream rock apron.
- Refer to the upstream elevation sketch for the proposed replacement bridge structure on Figure 7.

The backwater model of Omands Creek was modified to incorporate the proposed bridge replacement structure. The estimated water surface profiles for Omands Creek, with the proposed replacement bridge structure, are shown on Figure 8 while Table 5 summarizes the hydraulic assessment.

Table 5
Omands Creek at Dublin Avenue
Hydraulic Summary for Option 2A - Clear Span 16.5 m long Bridge

Probability	Discharge (m^3/s)	Water Level Downstream of Crossing (m)	Water Level Upstream of Crossing (m)	Headloss (m)	Clearance to Underside of Girder * (m)	Bridge Opening Velocities (m/s)
50% MD	3.8	232.53	232.56	<0.05	1.15	0.5
20% MD	7.0	232.88	232.91	<0.05	0.80	0.6
10% MD	9.4	233.09	233.12	<0.05	0.59	0.6
5% MD	12.0	233.30	233.32	<0.05	0.39	0.65
3% MD	14.0	233.46	233.48	<0.05	0.23	0.65
2% MD	15.8	233.61	233.63	<0.05	0.08	0.7
1% MD	19.0	233.85	233.88	<0.05	0.17 submerged	0.8
3DQ10	7.2	232.90	232.92	<0.05	0.79	0.6
2% IP	18.6	233.82	233.85	<0.05	0.14 submerged	0.75
2% Discharge (2008)	20.5	233.95	233.99	<0.05	0.28 submerged	0.85
1% (Future)	32.6	234.65	234.77	0.11	1.06 submerged	1.35

* - underside of girder (proposed) set to match existing at approximately el 233.71 m

The proposed design, although satisfying the headloss requirements, velocity requirements and fish passage requirements, would not entirely satisfy the underside of girder clearance requirement, however some minor deviation from the required 0.3 m freeboard is acceptable if all of the other requirements are satisfied. The girder clearance at the design discharge is approximately 0.08 m, which is less than normally accepted, however the freeboard would be no different than what exists for the existing bridge structure and would therefore be considered acceptable. Note that the profile of Dublin Avenue for this option would still require a raise to accommodate the deeper superstructure as the underside of girder elevation has been set at the existing underside of girder elevation.

The proposed bridge structure length/configuration is governed primarily by standard bridge configurations for the site geometry (road profile, channel bottom) and not headloss or velocity. A slightly shorter bridge could be considered, however non-standard taller height abutments would be required which typically has a higher cost.

Option 2B – 16.5 m Long Clear Span Bridge - Raised

The proposed clear span bridge option (2B) for this site is similar to Option 2A, however the underside of girder has been raised to provide the required freeboard from the 2% design discharge. The option is as follows:

- Replace existing bridge with a new 16.5 m long by approximately 20 m wide (to match existing bridge width) clear span concrete bridge founded on piled concrete abutments.

- Underside of girder set at elevation 233.95, which is approximately 0.25 m higher than the elevation of the existing bridge underside of girder elevation (233.71).
- Bridge constructed without skew on existing road alignment.
- The road would be raised by approximately 0.80 m from elevation 234.30 to approximately elevation 235.10.
- Place rock armouring within the bridge opening with 4:1 headslopes, a 2.0 m base width and the channel base set at el 231.40. The rock armouring should extend 3 m upstream and downstream of the outside faces of the bridge structure, wrapping around the abutment and extending up to approximately el 234.0. The rock armouring would consist of a 0.55 m thickness of Class 350 rock placed over non-woven geotextile.
- The creek will require excavation local to the crossing to permit the transition from the creek to the bridge. The transition should extend over a minimum length of 5 m downstream from the limits of the downstream rock apron and 10 m upstream from the limits of the upstream rock apron.
- Refer to the upstream elevation sketch for the proposed replacement bridge structure on Figure 9.

The backwater model of Omands Creek was modified to incorporate the proposed bridge replacement structure. The estimated water surface profiles for Omands Creek, with the proposed replacement bridge structure, are shown on Figure 10 while Table 6 summarizes the hydraulic assessment.

Table 6
Omands Creek at Dublin Avenue
Hydraulic Summary for Option 2B - Clear Span 16.5 m long Bridge - Raised

Probability	Discharge (m^3/s)	Water Level Downstream of Crossing (m)	Water Level Upstream of Crossing (m)	Headloss (m)	Clearance to Underside of Girder * (m)	Bridge Opening Velocities (m/s)
50% MD	3.8	232.53	232.56	<0.05	1.39	0.5
20% MD	7.0	232.88	232.91	<0.05	1.04	0.6
10% MD	9.4	233.09	233.12	<0.05	0.83	0.6
5% MD	12.0	233.30	233.32	<0.05	0.63	0.65
3% MD	14.0	233.46	233.48	<0.05	0.47	0.65
2% MD	15.8	233.61	233.63	<0.05	0.32	0.7
1% MD	19.0	233.85	233.87	<0.05	0.08	0.7
3DQ10	7.2	232.90	232.92	<0.05	1.03	0.6
2% IP	18.6	233.82	233.84	<0.05	0.11	0.7
2% Discharge (2008)	20.5	233.95	233.98	<0.05	0.03 submerged	0.7
1% (Future)	32.6	234.65	234.73	0.08	0.78 submerged	1.15

* - underside of girder (proposed) set at el 233.95 m

The proposed bridge structure length/configuration is governed primarily by standard bridge configurations for the site geometry (road profile, channel bottom) and not headloss or velocity. A slightly shorter bridge could be considered, however non-standard taller height abutments would be required which typically has a higher cost.

Option 3A – 8.7 m Long Solid Slab Bridge

The proposed solid slab bridge structure (Option 3A) for this site is as follows:

- Replace existing bridge with a new 8.7 m long by approximately 20 m wide (to match existing bridge width) clear span solid slab concrete bridge founded on concrete abutments. 8.0 m clear opening between abutments.
- Underside of girder set at the elevation of the existing bridge underside of girder elevation of 233.71. A reduction in underside of girder elevation from existing is not recommended.
- Structure constructed without skew on existing road alignment.
- The road would be raised by approximately 0.2 m from elevation 234.3 to approximately elevation 234.5.
- Place rock armouring within the bridge opening with 3:1 headslopes, a 6.0 m base width and the channel base set at el 231.40. The rock armouring should extend 3 m upstream and downstream of the outside faces of the bridge structure, wrapping around the abutment and extending up to approximately el 234.0. The rock armouring would consist of a 0.55 m thickness of Class 350 rock placed over non-woven geotextile.
- The creek will require excavation local to the crossing to permit the transition from the creek to the bridge. The transition should extend over a minimum length of 5 m downstream from the limits of the downstream rock apron and 10 m upstream from the limits of the upstream rock apron.
- Refer to the upstream elevation sketch for the proposed replacement bridge structure on Figure 11.

The backwater model of Omands Creek was modified to incorporate the proposed bridge replacement structure. The estimated water surface profiles for Omands Creek, with the proposed replacement bridge structure, are shown on Figure 12 while Table 7 summarizes the hydraulic assessment.

Table 7
Omands Creek at Dublin Avenue
Hydraulic Summary for Option 3A - Solid Slab Bridge

Probability	Discharge (m^3/s)	Water Level Downstream of Crossing (m)	Water Level Upstream of Crossing (m)	Headloss (m)	Clearance to Underside of Girder * (m)	Bridge Opening Velocities (m/s)
50% MD	3.8	232.54	232.55	<0.05	1.16	0.45
20% MD	7.0	232.88	232.90	<0.05	0.81	0.6
10% MD	9.4	233.10	233.12	<0.05	0.59	0.7
5% MD	12.0	233.31	233.33	<0.05	0.38	0.8
3% MD	14.0	233.46	233.49	<0.05	0.22	0.85
2% MD	15.8	233.62	233.64	<0.05	0.07	0.9
1% MD	19.0	233.85	233.91	0.06	0.20 submerged	1.05
3DQ10	7.2	232.90	232.92	<0.05	0.79	0.6
2% IP	18.6	233.83	233.88	0.06	0.17 submerged	1.0
2% Discharge (2008)	20.5	233.96	234.03	0.06	0.32 submerged	1.15
1% (Future)	32.6	234.66	234.86	0.20	1.15 submerged	1.8

* - underside of girder (proposed) set at el 233.71 m

Option 3B – 8.7 m Long Solid Slab Bridge - Lowered

The proposed solid slab bridge structure (Option 3B) for this site is similar to Option 3A, however the underside of girder has been lowered to reduce the required raise in road profile. The option is as follows:

- Replace existing bridge with a new 8.7 m long by approximately 20 m wide (to match existing bridge width) clear span solid slab concrete bridge founded on concrete abutments. 8.0 m clear opening between abutments.
- Underside of girder lowered by 0.18 m relative to existing underside of girder elevation (233.71) to elevation 233.53 to limit the requirement for erasing the road profile. Note that the underside of girder freeboard requirement at the design discharge would not be achieved with this configuration. A reduction in underside of girder elevation from existing is not recommended, however not unprecedented at other locations within Omands Creek.
- Structure constructed without skew on existing road alignment.
- The road profile would remain approximately at the existing elevation of 234.3.
- Place rock armouring within the bridge opening with 3:1 headslopes, a 6.0 m base width and the channel base set at el 231.40. The rock armouring should extend 3 m upstream and downstream of the outside faces of the bridge structure, wrapping around the abutment and

extending up to approximately el 234.0. The rock armouring would consist of a 0.55 m thickness of Class 350 rock placed over non-woven geotextile.

- The creek will require excavation local to the crossing to permit the transition from the creek to the bridge. The transition should extend over a minimum length of 5 m downstream from the limits of the downstream rock apron and 10 m upstream from the limits of the upstream rock apron.
- Refer to the upstream elevation sketch for the proposed replacement bridge structure on Figure 13.

The backwater model of Omands Creek was modified to incorporate the proposed bridge replacement structure. The estimated water surface profiles for Omands Creek, with the proposed replacement bridge structure, are shown on Figure 14 while Table 8 summarizes the hydraulic assessment.

Table 8
Omands Creek at Dublin Avenue
Hydraulic Summary for Option 3B - Solid Slab Bridge - Lowered

Probability	Discharge (m^3/s)	Water Level Downstream of Crossing (m)	Water Level Upstream of Crossing (m)	Headloss (m)	Clearance to Underside of Girder * (m)	Bridge Opening Velocities (m/s)
50% MD	3.8	232.54	232.55	<0.05	0.98	0.45
20% MD	7.0	232.88	232.90	<0.05	0.63	0.6
10% MD	9.4	233.10	233.12	<0.05	0.41	0.7
5% MD	12.0	233.31	233.33	<0.05	0.20	0.8
3% MD	14.0	233.46	233.49	<0.05	0.04	0.85
2% MD	15.8	233.62	233.66	0.05	0.13 submerged	0.95
1% MD	19.0	233.85	233.93	0.07	0.40 submerged	1.05
3DQ10	7.2	232.90	232.92	<0.05	0.61	0.6
2% IP	18.6	233.83	233.89	0.07	0.36 submerged	1.1
2% Discharge (2008)	20.5	233.96	234.05	0.08	0.52 submerged	1.25
1% (Future)	32.6	234.66	234.91	0.25	1.38 submerged	1.95

* - underside of girder (proposed) set at el 233.53 m

5.0 Other Considerations

Best Management Practices for working near waterways including the appropriate implementation of sediment and erosion control measures should be followed. Exposed slopes not covered with a rock blanket should be revegetated and covered with erosion control blanket. Construction activities within the creek shall not take place between April 1 and June 15 of any given year. An Environmental Management Plan should be prepared which details the specific environmental management requirements and sediment and erosion control.

Water management during construction can be an important aspect of any project and may influence the cost and scheduling for crossing replacement. The largest flows within the creek are expected to occur during the spring runoff period and following a heavy summer rainfall event. Construction of substructure units/base slabs should therefore take place in the late fall and winter period when the potential for runoff is reduced thereby minimizing water management requirements. All instream work should be completed no later than March 15th, with the schedule showing the majority of instream work completed by early March. Although minimal, flows continue throughout the winter and should be considered as part of the water management plan with appropriate measures taken to accommodate the flow.

6.0 Closure

The technical information provided in this report is in accordance with current engineering principles and practices (Standard of Practice). The findings of this report were based on information collected by TREK during recent field surveys and past surveys by others. Hydrotechnical analysis is based on environmental characteristics assumed to extend uniformly throughout the contributing area and watershed-scale, temporally-discrete hydrologic events.

All information provided in this report is subject to our standard terms and conditions for engineering services, a copy of which is provided to each of our clients with the original scope of work, or a mutually executed standard engineering services agreement. If these conditions are not attached, and you are not already in possession of such terms and conditions, contact our office and you will be promptly provided with a copy.

This report has been prepared by TREK Geotechnical Inc. (the Consultant) for the exclusive use of Stantec (the Client) and their agents for the work product presented in the report. Any findings or recommendations provided in this report are not to be relied upon by any third parties, except as agreed to in writing by the Client and Consultant prior to use.

Figures

SCALE 1:5000 (METRES)

100 0 100 200

OMANDS CREEK AT DUBLIN AVE BRIDGE
LOCATION PLAN
FIGURE 1

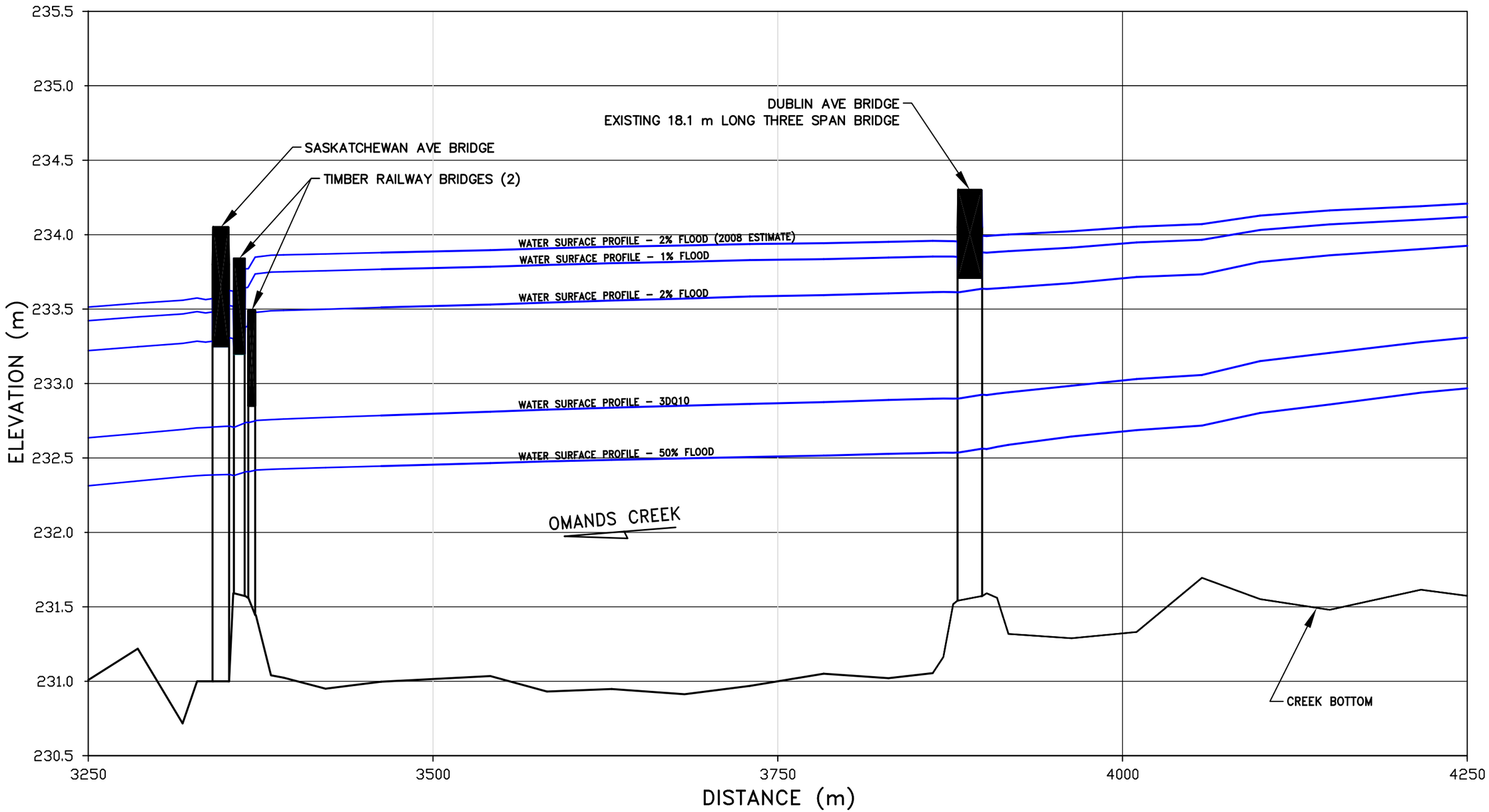

NOTES:
1) HEC–RAS MODEL DEVELOPED FROM JULY 2018 SURVEY DATA AND SASKATCHEWAN AVENUE HYDRAULIC MODEL (2015)
2) WATER SURFACE PROFILES REFLECT HYDRAULIC CONDITIONS WITH EXISTING 18.1 m LONG THREE SPAN BRIDGE

DUBLIN AVENUE BRIDGE REPLACEMENT
OMANDS CREEK – WATER SURFACE PROFILES
EXISTING CONDITIONS
FIGURE 2

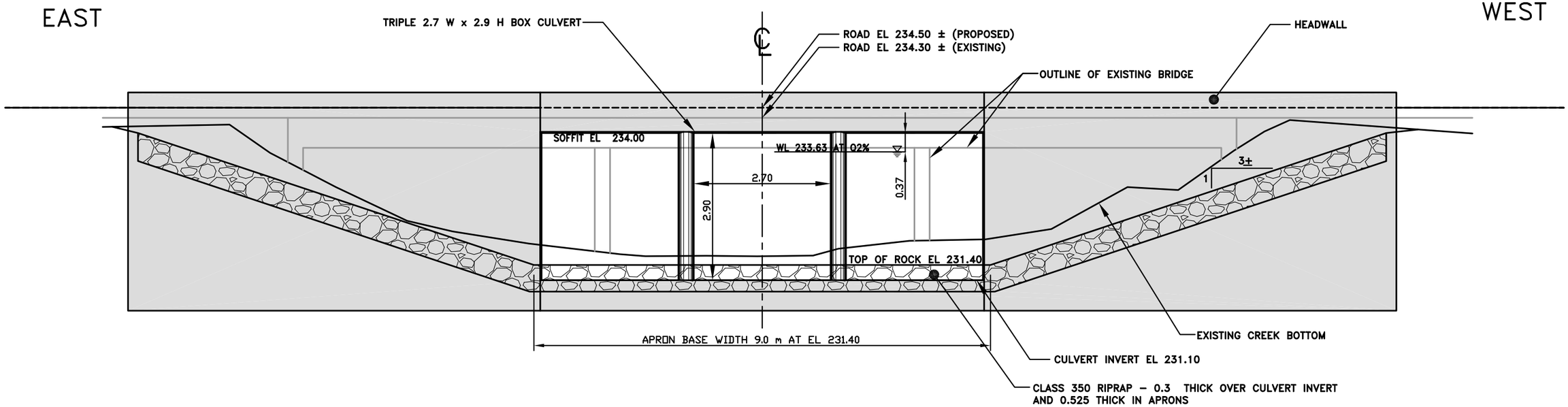

UPSTREAM ELEVATION

SCALE 1:100

NOTES

1) PROPOSED BOX CULVERT CONSTRUCTED WITH NO SKEW
2) THE CLASS 350 RIPRAP WILL BE WELL–GRADED, ROUNDED, CLEAN FIELD STONE OR QUARRIED CRUSHED ROCK WITH THE FOLLOWING GRADATION: 100% < 350 mm, 50% > 200 mm AND 80% > 100 mm.
3) 30% BY VOLUME OF GRANULAR WILL BE BLENDED WITH THE CLASS 350 RIPRAP PRIOR TO PLACEMENT IN ORDER TO FILL THE INTERSTITIAL SPACE/ROCK VOIDS WITHIN THE ROCK.
4) THE GRANULAR FOR THE STRUCTURE SHOULD BE CLEAN GRAVEL OR CLEAN CRUSHED ROCK WITH THE FOLLOWING GRADATION: 100%< 100 mm, 50% > 20 mm AND 80% > 3 mm.
5) THE GRANULAR BEDDING SHOULD BE CLEAN GRAVEL OR CLEAN CRUSHED ROCK WITH THE FOLLOWING GRADATION: 100< 19 mm, 50% > 9 mm AND 80% > 2 mm.
6) THE GEOTEXTILE SHALL BE NON–WOVEN CLASS II HEAVY DUTY GEOTEXTILE

SCALE (METRES)

5 0 5 10

DUBLIN AVENUE BRIDGE REPLACEMENT
OPTION 1A – CONCRETE BOX CULVERT
UPSTREAM ELEVATION
FIGURE 3

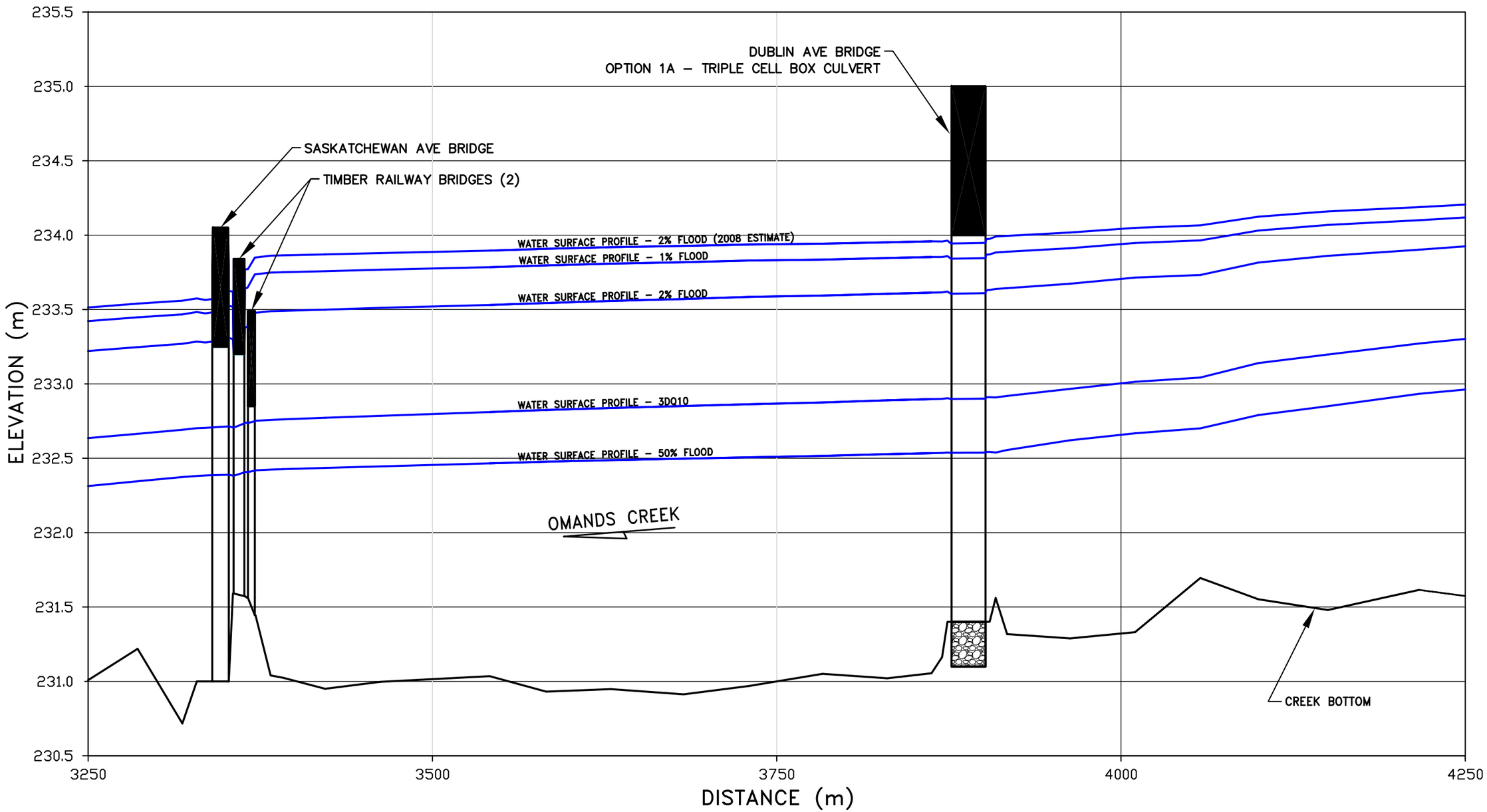

NOTES:
1) HEC–RAS MODEL DEVELOPED FROM JULY 2018 SURVEY DATA AND SASKATCHEWAN AVENUE HYDRAULIC MODEL (2015)
2) WATER SURFACE PROFILES REFLECT HYDRAULIC CONDITIONS WITH OPTION 1A – TRIPLE CELL 2.7 W x 2.9 H CONCRETE BOX CULVERT

DUBLIN AVENUE BRIDGE REPLACEMENT
OMANDS CREEK – WATER SURFACE PROFILES
OPTION 1A – CONCRETE BOX CULVERT
FIGURE 4

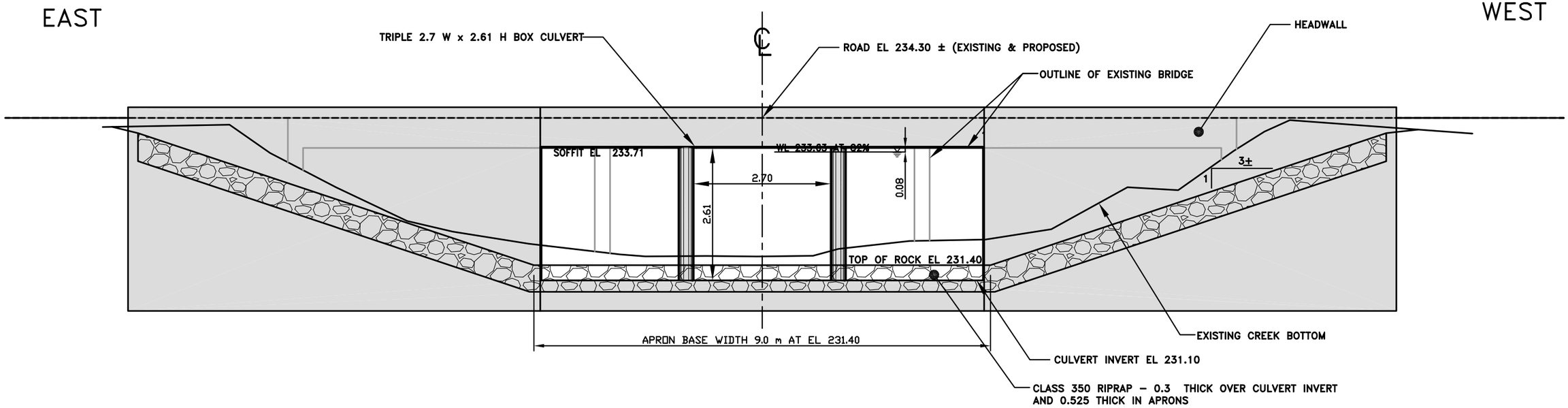

UPSTREAM ELEVATION

SCALE 1:100

NOTES

1) PROPOSED BOX CULVERT CONSTRUCTED WITH NO SKEW
2) THE CLASS 350 RIPRAP WILL BE WELL-GRADED, ROUNDED, CLEAN FIELD STONE OR QUARRIED CRUSHED ROCK WITH THE FOLLOWING GRADATION: 100% < 350 mm, 50% > 200 mm AND 80% > 100 mm.
3) 30% BY VOLUME OF GRANULAR WILL BE BLENDED WITH THE CLASS 350 RIPRAP PRIOR TO PLACEMENT IN ORDER TO FILL THE INTERSTITIAL SPACE/ROCK VOIDS WITHIN THE ROCK.
4) THE GRANULAR FOR THE STRUCTURE SHOULD BE CLEAN GRAVEL OR CLEAN CRUSHED ROCK WITH THE FOLLOWING GRADATION: 100%< 100 mm, 50% > 20 mm AND 80% > 3 mm.
5) THE GRANULAR BEDDING SHOULD BE CLEAN GRAVEL OR CLEAN CRUSHED ROCK WITH THE FOLLOWING GRADATION: 100< 19 mm, 50% > 9 mm AND 80% > 2 mm.
6) THE GEOTEXTILE SHALL BE NON-WOVEN CLASS II HEAVY DUTY GEOTEXTILE

SCALE (METRES)

5 0 5 10

DUBLIN AVENUE BRIDGE REPLACEMENT
OPTION 1B – CONCRETE BOX CULVERT
UPSTREAM ELEVATION
FIGURE 5

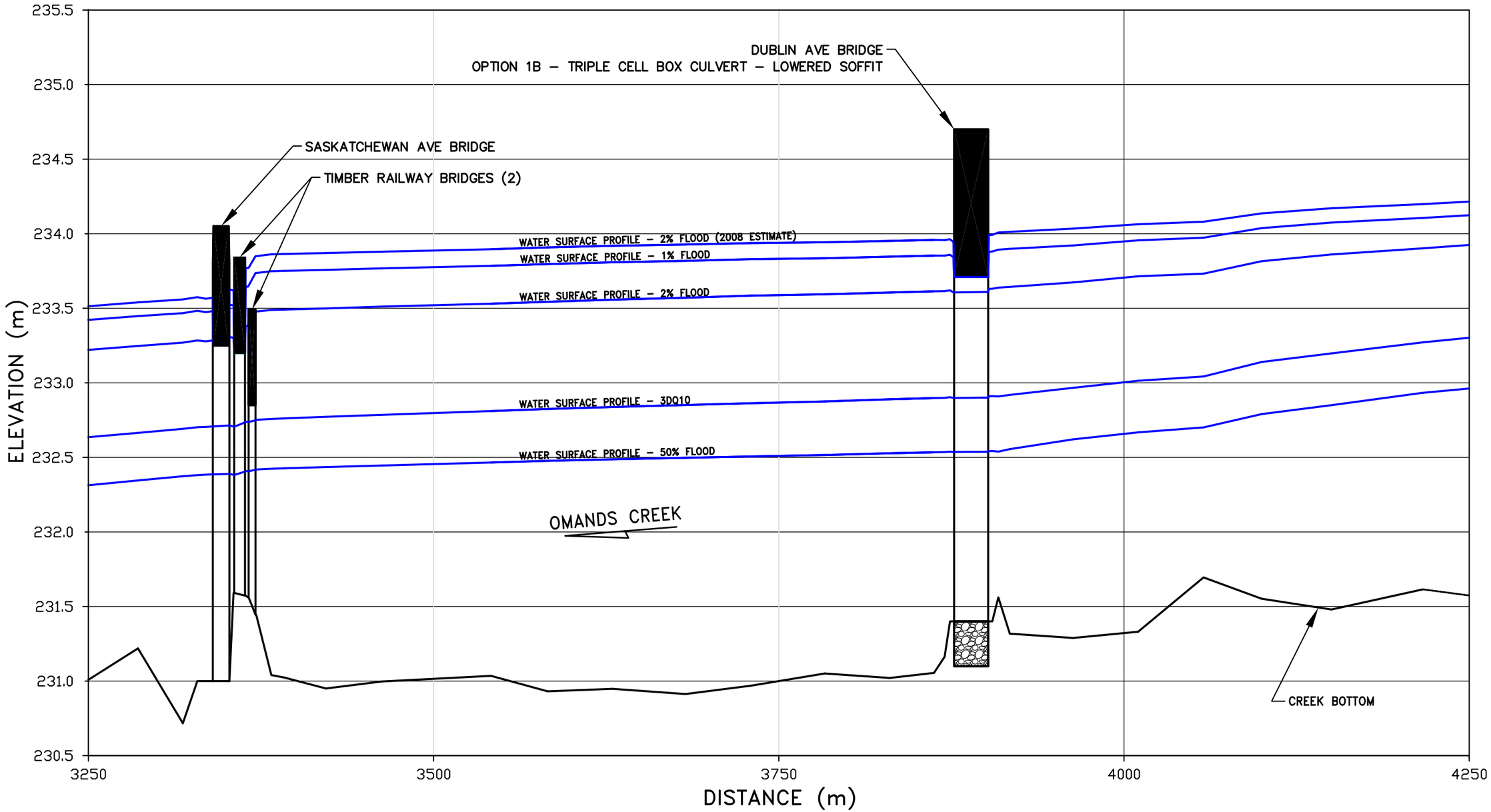

NOTES:
1) HEC–RAS MODEL DEVELOPED FROM JULY 2018 SURVEY DATA AND SASKATCHEWAN AVENUE HYDRAULIC MODEL (2015)
2) WATER SURFACE PROFILES REFLECT HYDRAULIC CONDITIONS WITH OPTION 1B – TRIPLE CELL 2.7 W x 2.61 H CONCRETE BOX CULVERT

DUBLIN AVENUE BRIDGE REPLACEMENT
OMANDS CREEK – WATER SURFACE PROFILES
OPTION 1B – CONCRETE BOX CULVERT
FIGURE 6

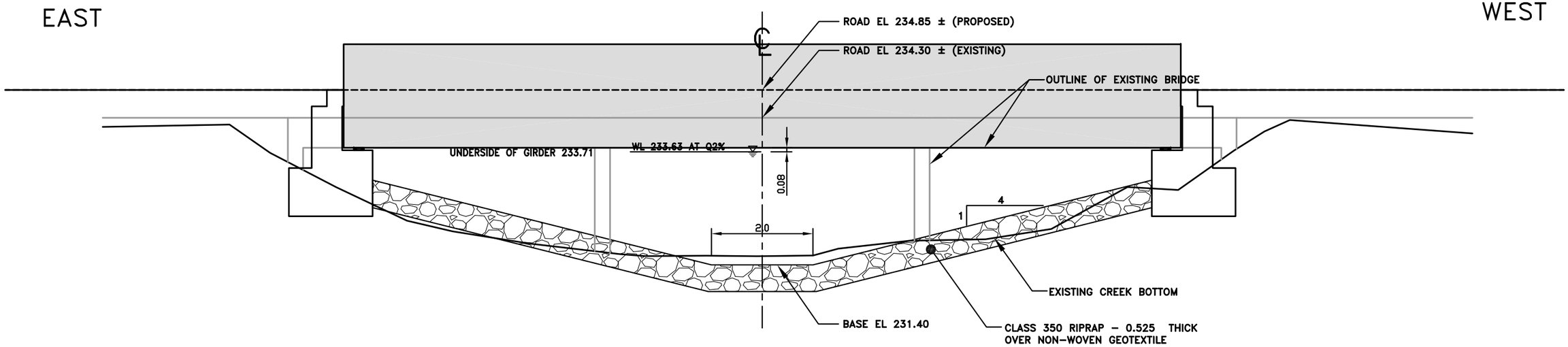

UPSTREAM ELEVATION

SCALE 1:100

NOTES

1) PROPOSED BRIDGE CONSTRUCTED WITH NO SKEW
2) THE CLASS 350 RIPRAP WILL BE WELL-GRADED, ROUNDED, CLEAN FIELD STONE OR QUARRIED CRUSHED ROCK WITH THE FOLLOWING GRADATION: 100% < 350 mm, 50% > 200 mm AND 80% > 100 mm.
3) 30% BY VOLUME OF GRANULAR WILL BE BLENDED WITH THE CLASS 350 RIPRAP PRIOR TO PLACEMENT IN ORDER TO FILL THE INTERSTITIAL SPACE/ROCK VOIDS WITHIN THE ROCK.
4) THE GRANULAR FOR THE STRUCTURE SHOULD BE CLEAN GRAVEL OR CLEAN CRUSHED ROCK WITH THE FOLLOWING GRADATION: 100%< 100 mm, 50% > 20 mm AND 80% > 3 mm.
5) THE GRANULAR BEDDING SHOULD BE CLEAN GRAVEL OR CLEAN CRUSHED ROCK WITH THE FOLLOWING GRADATION: 100< 19 mm, 50% > 9 mm AND 80% > 2 mm.
6) THE GEOTEXTILE SHALL BE NON-WOVEN CLASS II HEAVY DUTY GEOTEXTILE

SCALE (METRES)

5 0 5 10

DUBLIN AVENUE BRIDGE REPLACEMENT
OPTION 2A – CLEAR SPAN BRIDGE
UPSTREAM ELEVATION
FIGURE 7

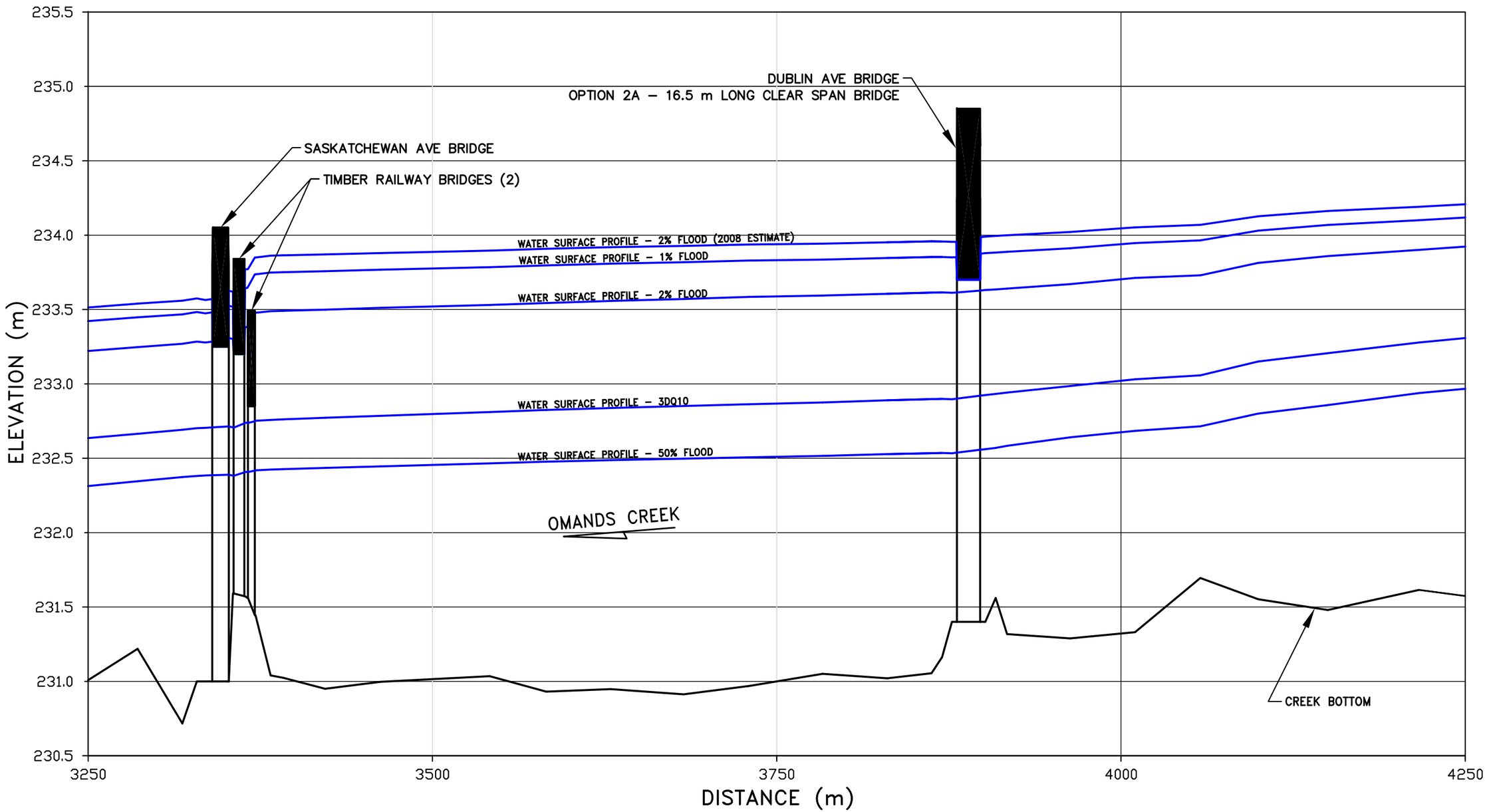

NOTES:
1) HEC-RAS MODEL DEVELOPED FROM JULY 2018 SURVEY DATA AND SASKATCHEWAN AVENUE HYDRAULIC MODEL (2015)
2) WATER SURFACE PROFILES REFLECT HYDRAULIC CONDITIONS WITH OPTION 2A – 16.5 m LONG CLEAR SPAN BRIDGE WITH UNDERSIDE OF GIRDER SET AT EXISTING BRIDGE EL 233.71

DUBLIN AVENUE BRIDGE REPLACEMENT
OMANDS CREEK – WATER SURFACE PROFILES
OPTION 2A – CLEAR SPAN BRIDGE
FIGURE 8

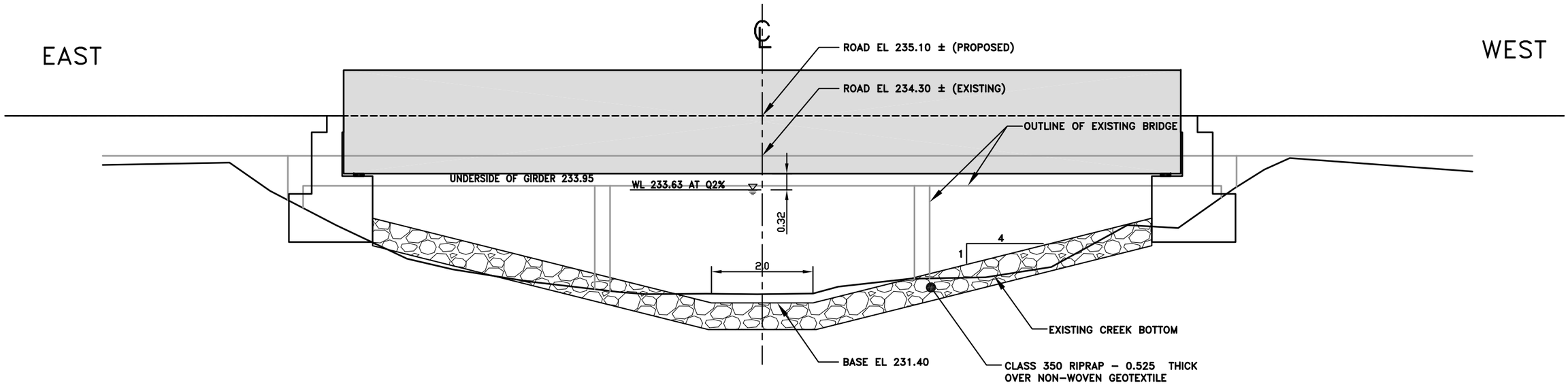

UPSTREAM ELEVATION

SCALE 1:100

NOTES

1) PROPOSED BRIDGE CONSTRUCTED WITH NO SKEW
2) THE CLASS 350 RIPRAP WILL BE WELL-GRADED, ROUNDED, CLEAN FIELD STONE OR QUARRIED CRUSHED ROCK WITH THE FOLLOWING GRADATION: 100% < 350 mm, 50% > 200 mm AND 80% > 100 mm.
3) 30% BY VOLUME OF GRANULAR WILL BE BLENDED WITH THE CLASS 350 RIPRAP PRIOR TO PLACEMENT IN ORDER TO FILL THE INTERSTITIAL SPACE/ROCK VOIDS WITHIN THE ROCK.
4) THE GRANULAR FOR THE STRUCTURE SHOULD BE CLEAN GRAVEL OR CLEAN CRUSHED ROCK WITH THE FOLLOWING GRADATION: 100%< 100 mm, 50% > 20 mm AND 80% > 3 mm.
5) THE GRANULAR BEDDING SHOULD BE CLEAN GRAVEL OR CLEAN CRUSHED ROCK WITH THE FOLLOWING GRADATION: 100< 19 mm, 50% > 9 mm AND 80% > 2 mm.
6) THE GEOTEXTILE SHALL BE NON-WOVEN CLASS II HEAVY DUTY GEOTEXTILE

SCALE (METRES)

5 0 5 10

DUBLIN AVENUE BRIDGE REPLACEMENT
OPTION 2B – CLEAR SPAN BRIDGE – RAISED
UPSTREAM ELEVATION
FIGURE 9

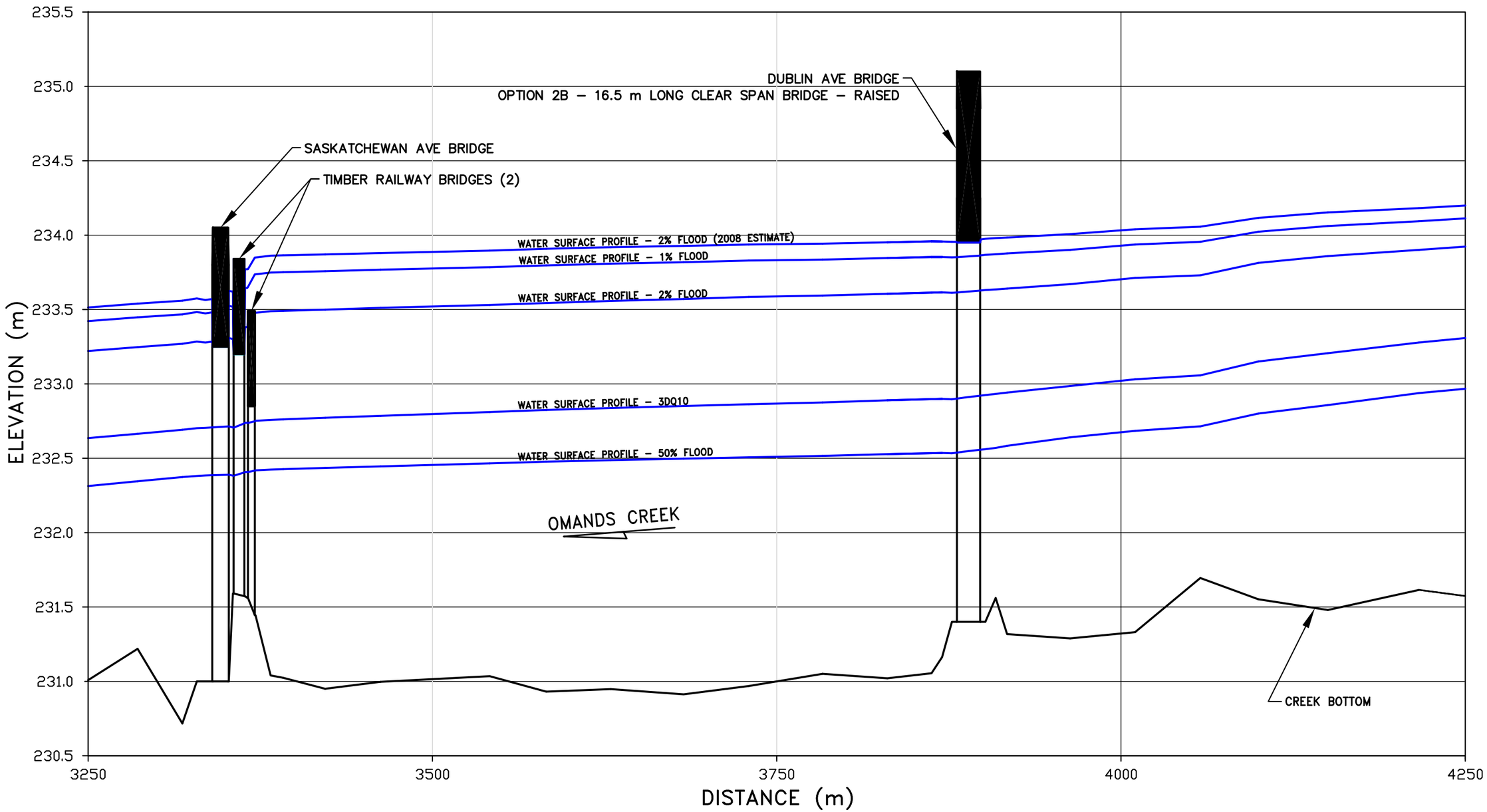

NOTES:
1) HEC–RAS MODEL DEVELOPED FROM JULY 2018 SURVEY DATA AND SASKATCHEWAN AVENUE HYDRAULIC MODEL (2015)
2) WATER SURFACE PROFILES REFLECT HYDRAULIC CONDITIONS WITH OPTION 2B – 16.5 m LONG CLEAR SPAN BRIDGE WITH UNDERSIDE OF GIRDER RAISED TO EL 233.95

DUBLIN AVENUE BRIDGE REPLACEMENT
OMANDS CREEK – WATER SURFACE PROFILES
OPTION 2B – CLEAR SPAN BRIDGE – RAISED
FIGURE 10

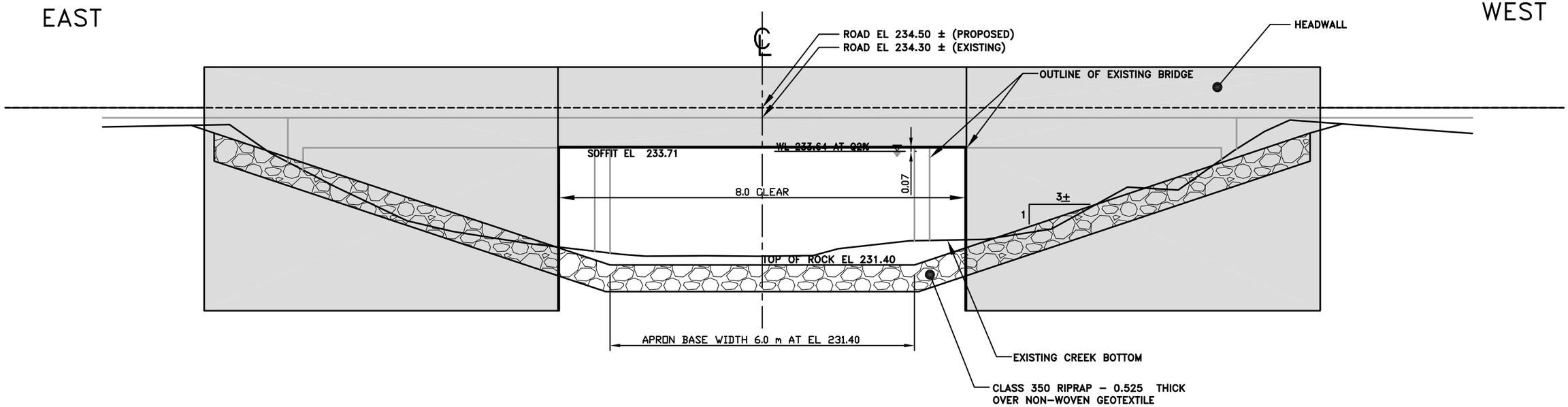

UPSTREAM ELEVATION

SCALE 1:100

NOTES

1) PROPOSED SOLID SLAB BRIDGE CONSTRUCTED WITH NO SKEW
2) THE CLASS 350 RIPRAP WILL BE WELL-GRADED, ROUNDED, CLEAN FIELD STONE OR QUARRIED CRUSHED ROCK WITH THE FOLLOWING GRADATION: 100% < 350 mm, 50% > 200 mm AND 80% > 100 mm.
3) 30% BY VOLUME OF GRANULAR WILL BE BLENDED WITH THE CLASS 350 RIPRAP PRIOR TO PLACEMENT IN ORDER TO FILL THE INTERSTITIAL SPACE/ROCK VOIDS WITHIN THE ROCK.
4) THE GRANULAR FOR THE STRUCTURE SHOULD BE CLEAN GRAVEL OR CLEAN CRUSHED ROCK WITH THE FOLLOWING GRADATION: 100%< 100 mm, 50% > 20 mm AND 80% > 3 mm.
5) THE GRANULAR BEDDING SHOULD BE CLEAN GRAVEL OR CLEAN CRUSHED ROCK WITH THE FOLLOWING GRADATION: 100< 19 mm, 50% > 9 mm AND 80% > 2 mm.
6) THE GEOTEXTILE SHALL BE NON-WOVEN CLASS II HEAVY DUTY GEOTEXTILE

SCALE (METRES)

5 0 5 10

DUBLIN AVENUE BRIDGE REPLACEMENT
OPTION 3A – SOLID SLAB BRIDGE
UPSTREAM ELEVATION
FIGURE 11

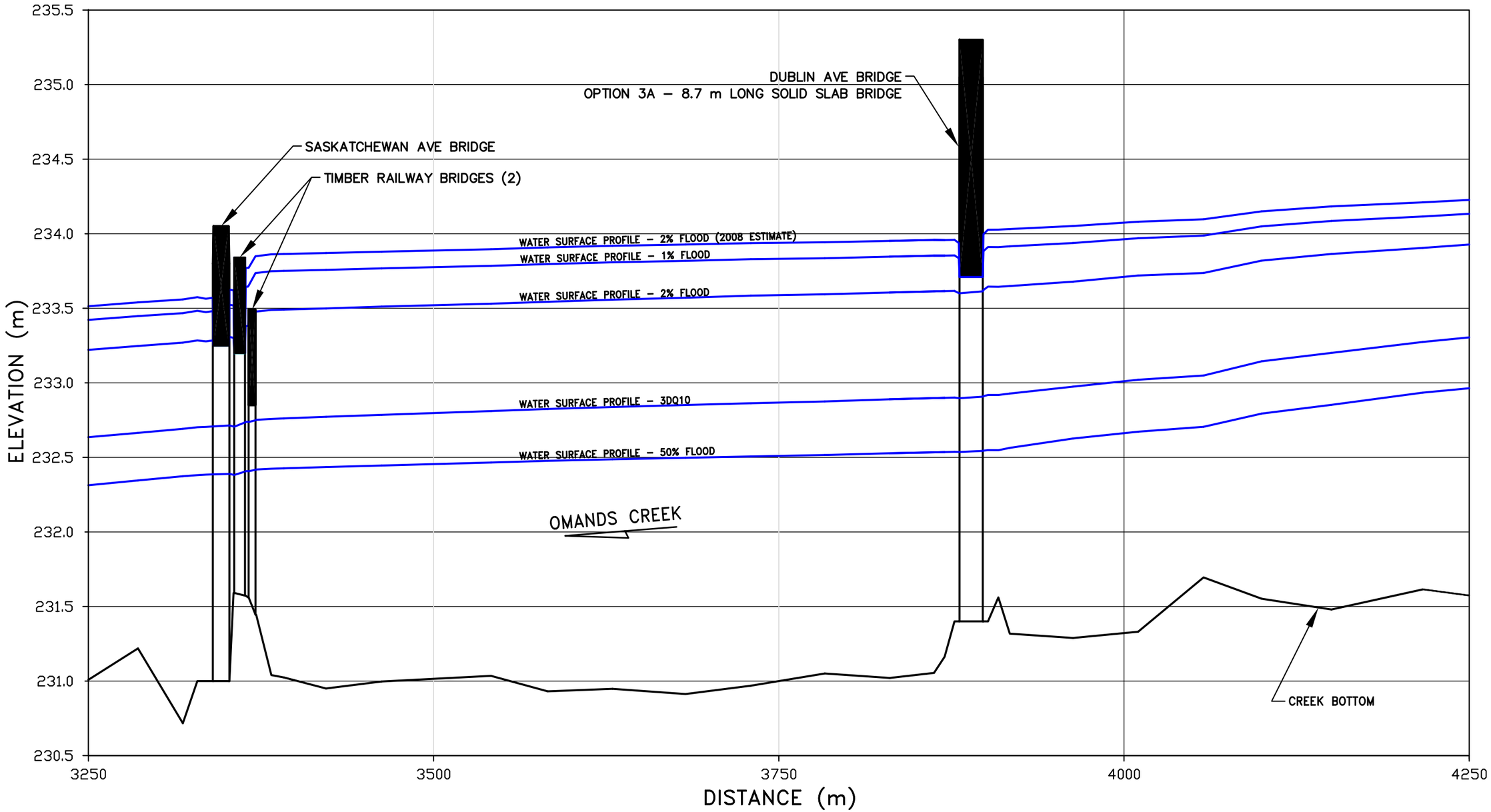

NOTES:
1) HEC–RAS MODEL DEVELOPED FROM JULY 2018 SURVEY DATA AND SASKATCHEWAN AVENUE HYDRAULIC MODEL (2015)
2) WATER SURFACE PROFILES REFLECT HYDRAULIC CONDITIONS WITH OPTION 3A – 8.7 m LONG SOLID SLAB BRIDGE WITH UNDERSIDE OF GIRDER SET AT EXISTING BRIDGE EL 233.71

DUBLIN AVENUE BRIDGE REPLACEMENT
OMANDS CREEK – WATER SURFACE PROFILES
OPTION 3A – SOLID SLAB BRIDGE
FIGURE 12

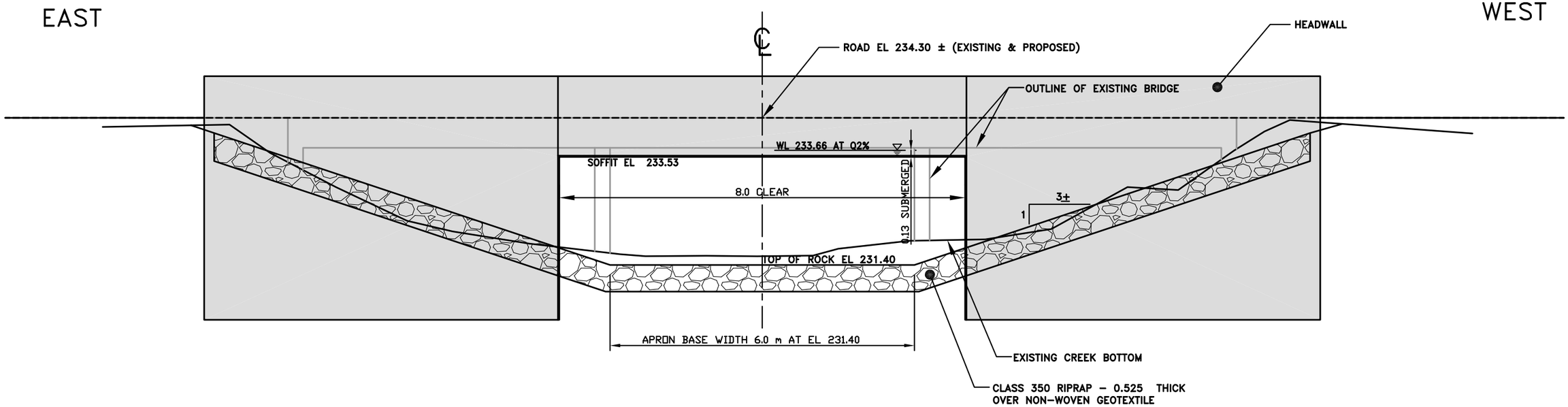

UPSTREAM ELEVATION

SCALE 1:100

NOTES

1) PROPOSED SOLID SLAB BRIDGE CONSTRUCTED WITH NO SKEW
2) THE CLASS 350 RIPRAP WILL BE WELL-GRADED, ROUNDED, CLEAN FIELD STONE OR QUARRIED CRUSHED ROCK WITH THE FOLLOWING GRADATION: 100% < 350 mm, 50% > 200 mm AND 80% > 100 mm.
3) 30% BY VOLUME OF GRANULAR WILL BE BLENDED WITH THE CLASS 350 RIPRAP PRIOR TO PLACEMENT IN ORDER TO FILL THE INTERSTITIAL SPACE/ROCK VOIDS WITHIN THE ROCK.
4) THE GRANULAR FOR THE STRUCTURE SHOULD BE CLEAN GRAVEL OR CLEAN CRUSHED ROCK WITH THE FOLLOWING GRADATION: 100%< 100 mm, 50% > 20 mm AND 80% > 3 mm.
5) THE GRANULAR BEDDING SHOULD BE CLEAN GRAVEL OR CLEAN CRUSHED ROCK WITH THE FOLLOWING GRADATION: 100< 19 mm, 50% > 9 mm AND 80% > 2 mm.
6) THE GEOTEXTILE SHALL BE NON-WOVEN CLASS II HEAVY DUTY GEOTEXTILE

SCALE (METRES)

5 0 5 10

DUBLIN AVENUE BRIDGE REPLACEMENT
OPTION 3B – SOLID SLAB BRIDGE – LOWERED
UPSTREAM ELEVATION
FIGURE 13

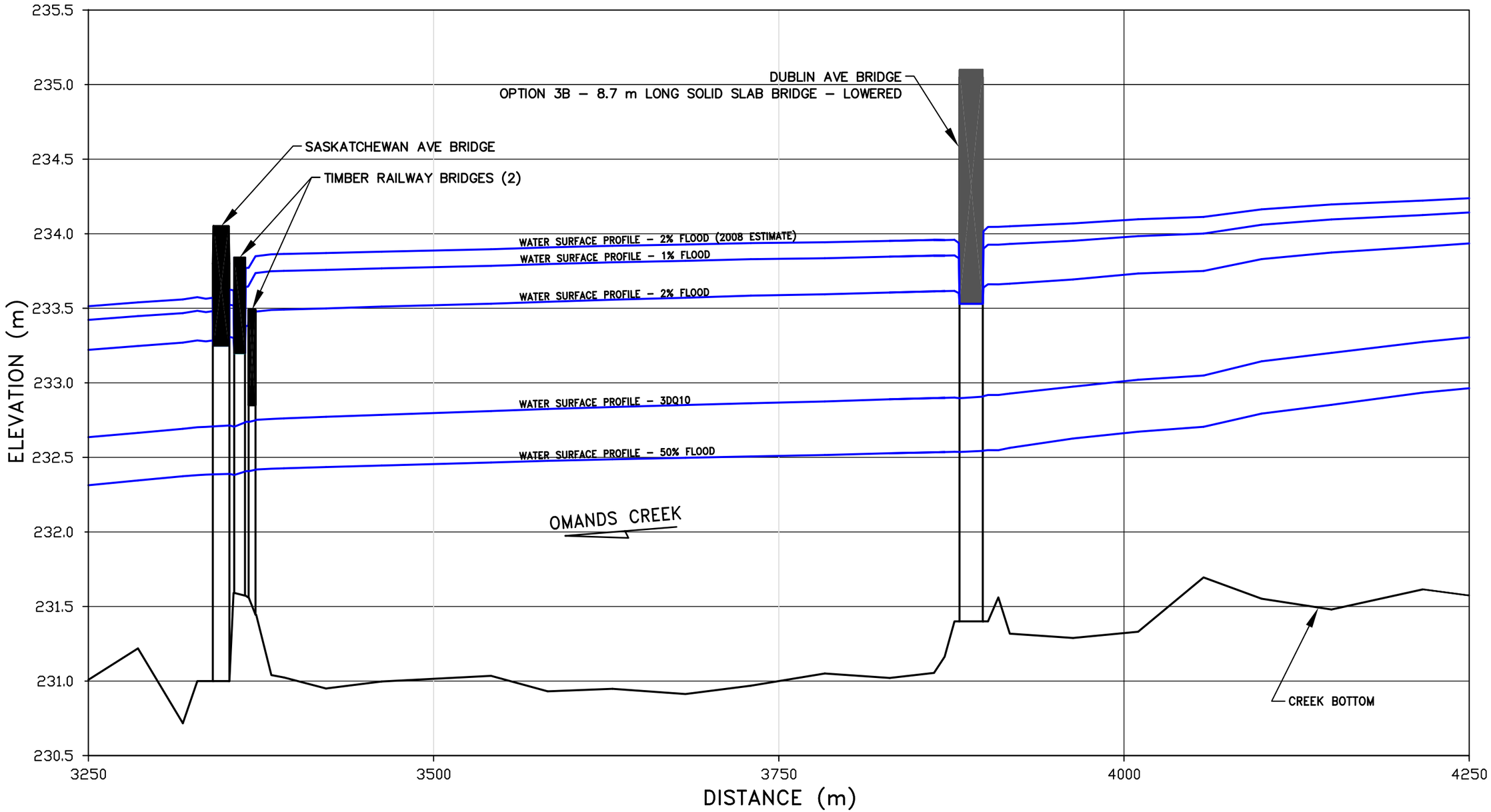

NOTES:
1) HEC–RAS MODEL DEVELOPED FROM JULY 2018 SURVEY DATA AND SASKATCHEWAN AVENUE HYDRAULIC MODEL (2015)
2) WATER SURFACE PROFILES REFLECT HYDRAULIC CONDITIONS WITH OPTION 3B – 8.7 m LONG SOLID SLAB BRIDGE WITH UNDERSIDE OF GIRDER LOWERED TO EL 233.53

DUBLIN AVENUE BRIDGE REPLACEMENT
OMANDS CREEK – WATER SURFACE PROFILES
OPTION 3B – SOLID SLAB BRIDGE – LOWERED
FIGURE 14

Photographs

Photo No. 1 Omands Creek downstream of Dublin Avenue

Photo No. 2 Downstream side of Dublin Avenue Bridge

All photographs taken July 5, 2018

Photo No. 3 Upstream side of Dublin Avenue Bridge

Photo No. 4 Omands Creek upstream of Dublin Avenue

Appendix A
Summary Table of Frequency Flow Results
Omands Creek at Metro Route 90 - 05MJ007

Table 1. Omands Creek at Metro Rte. 90 05MJ007 Flood Frquency

FREQ (%)	RETURN PERIOD (YEARS)	DAILY Q (CMS)	INSTANTANEOUS Q (CMS)
1	100	19.0	22.2
2	50	15.8	18.6
3	33	14.0	16.5
5	20	12.0	14.3
10	10	9.4	11.3
20	5	7.0	8.5
30	3	5.6	6.9
50	2	3.8	4.8
3D-Q10		7.2	

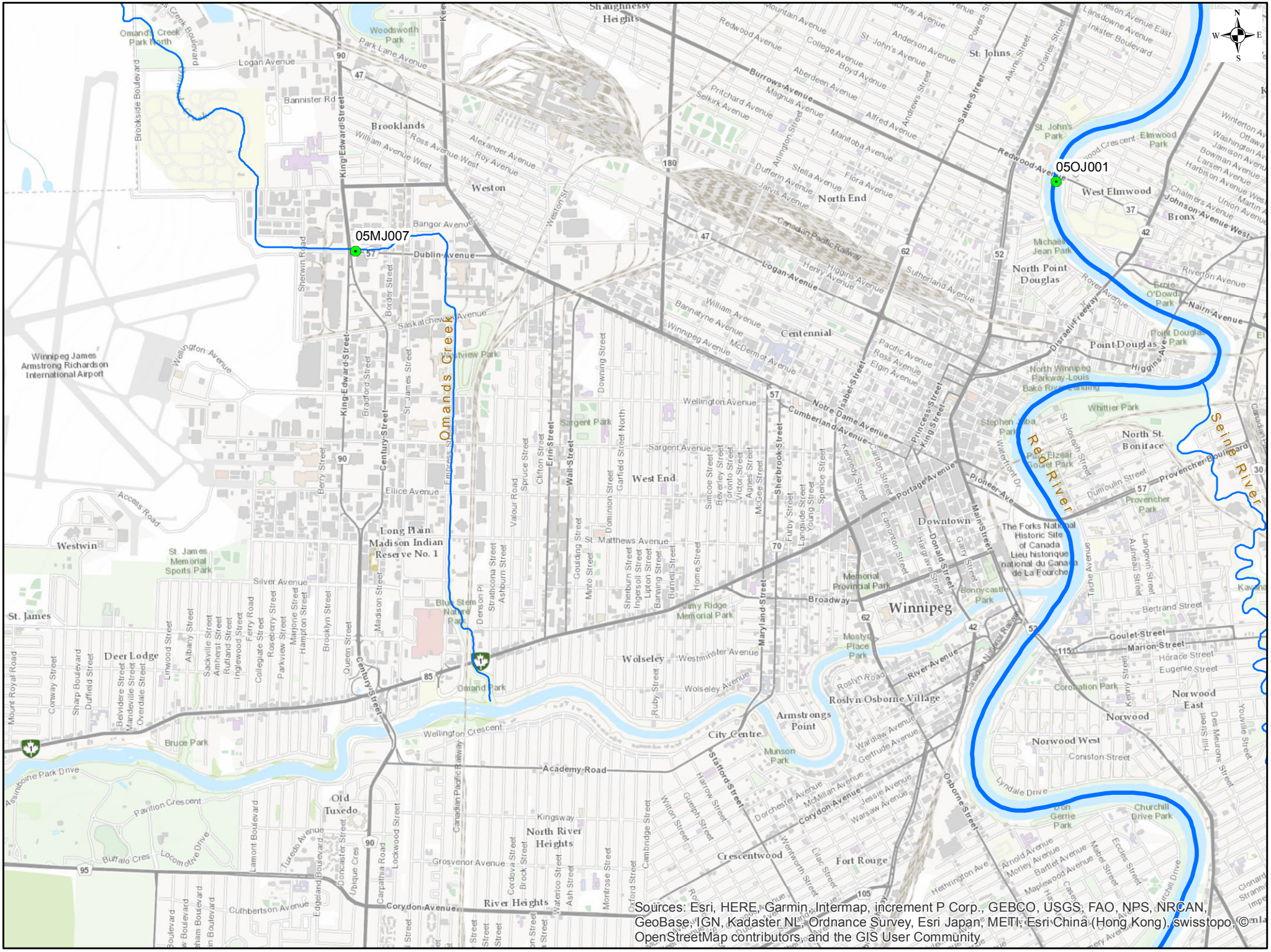

OMANDS CREEK
AT STATION 05MJ007

0 0.325 0.65 1.3 Miles

Manitoba
Copyright © 2016 Manitoba Infrastructure

Appendix B
Fish Habitat Classification Map

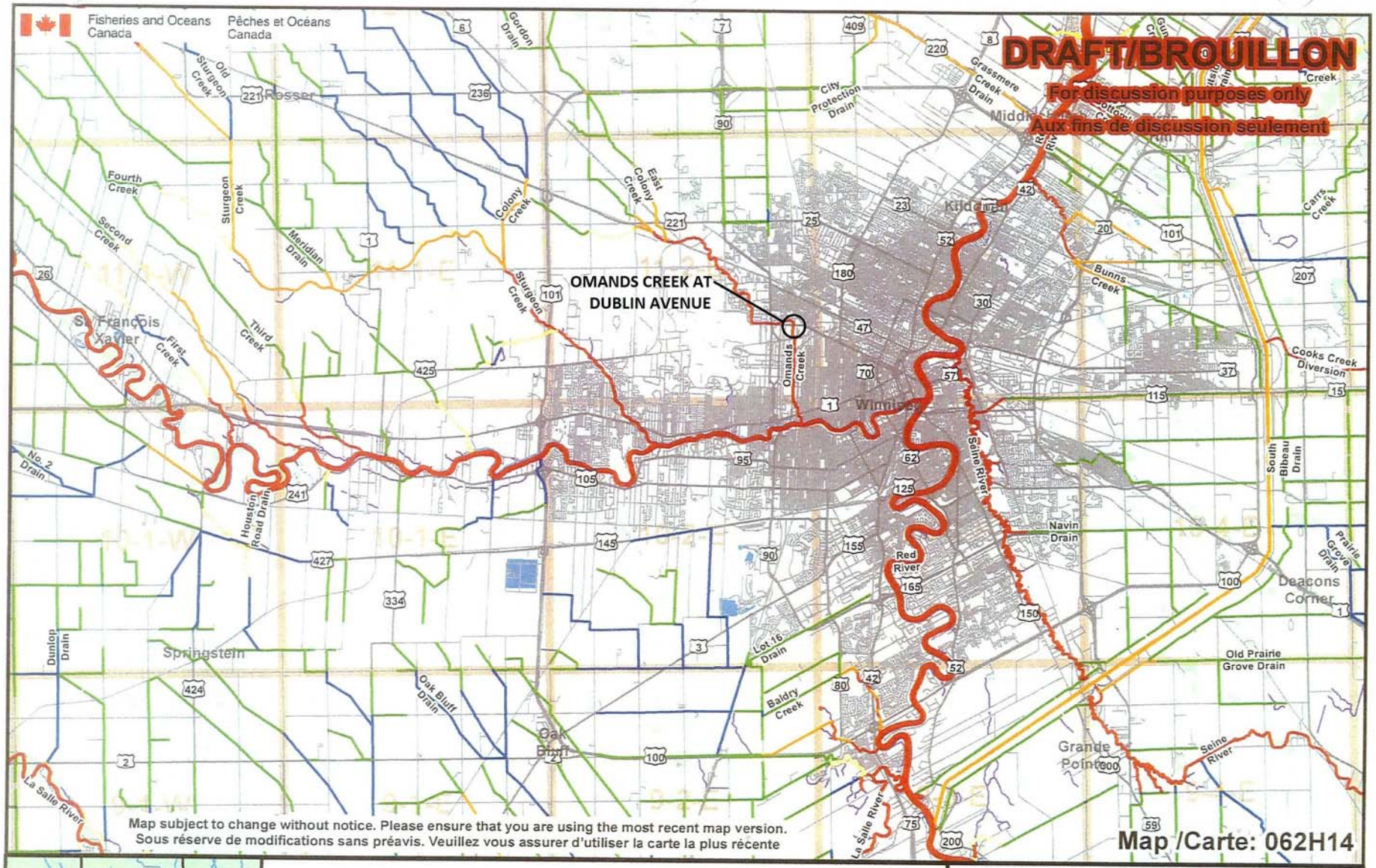

062I04	062I03	062I02
062H13	062H14	062H15
062H12	062H11	062H10

Kilometers 0 1 2 4 6 8 10 Kilomètres

Miles 0 1 2 4 6 Milles

Map not to be used for navigation/
Ne pas utiliser pour la navigation

©Her Majesty the Queen in Right of Canada 2007
©Sa majesté la Reine du Chef du Canada 2007

Habitat Type/ Type d'habitat	Color/ Couleur
A	
B	
C	
D	
E	
Unclassified/ Non classifié	

Fish Habitat Classification for Manitoba Agricultural Watersheds/ Classification de l'habitat du poisson par rapport aux bassins hydrographiques agricoles au Manitoba

Version 1.0

Valid until March 31, 2008
Valide jusqu'au 31 mars 2008

Canada