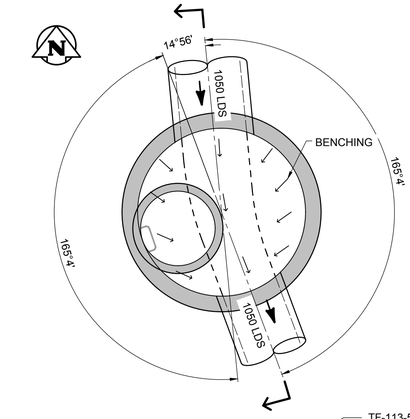

PLAN

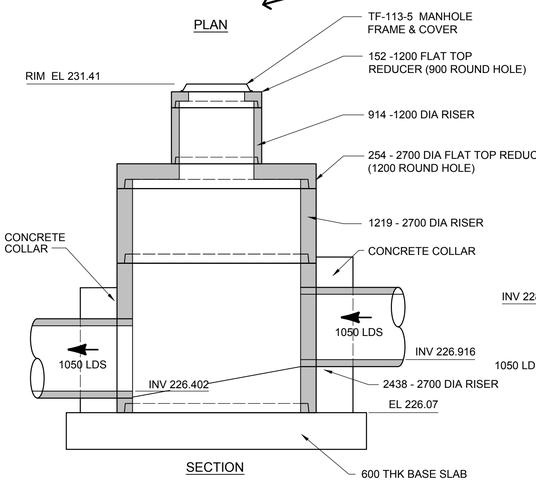

SECTION

1 MANHOLE S700

1 : 50

- BOURKEVALE PARK

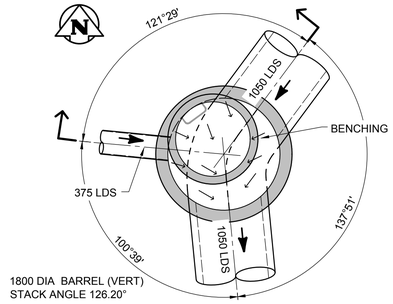

PLAN

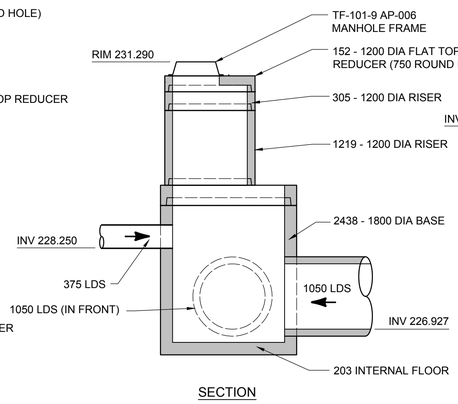

SECTION

2 MANHOLE S701

1 : 50

- BOURKEVALE PARK

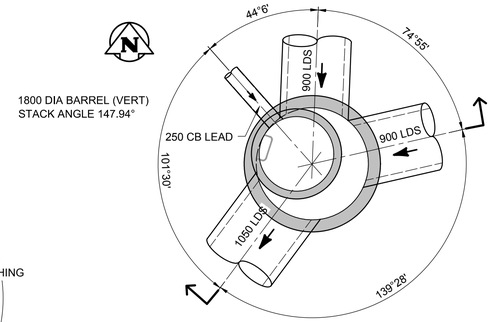

PLAN

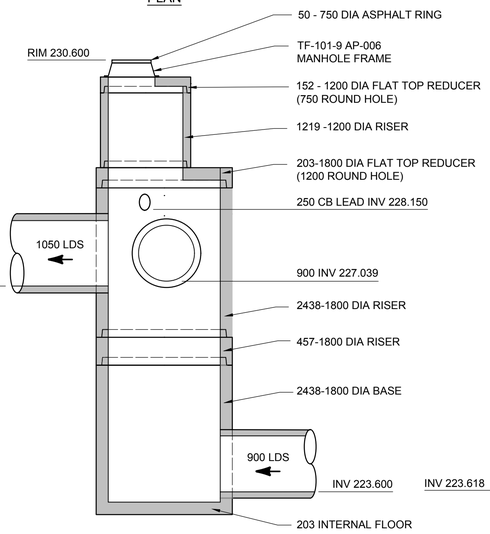

SECTION

3 MANHOLE S702

1 : 50

- FERRY & ASSINIBOINE

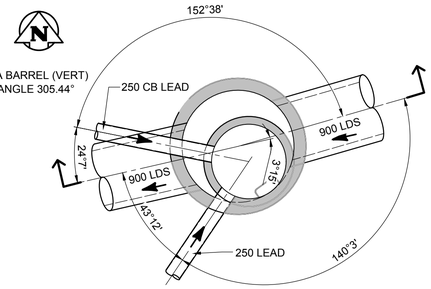

PLAN

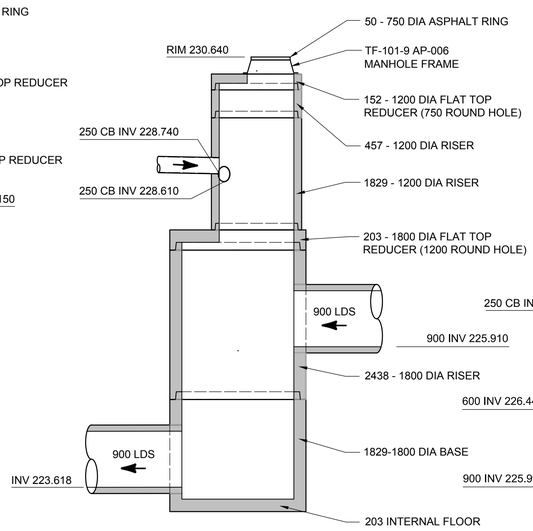

SECTION

4 MANHOLE S703

1 : 50

- ASSINIBOINE & FERRY EAST PROPERTY LINE

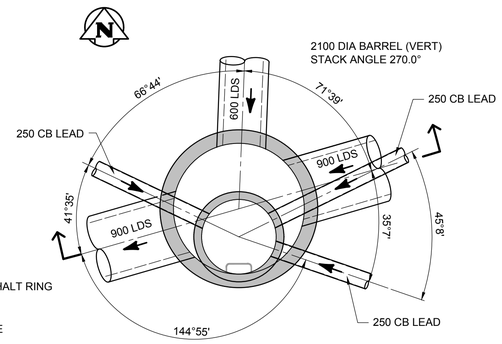

PLAN

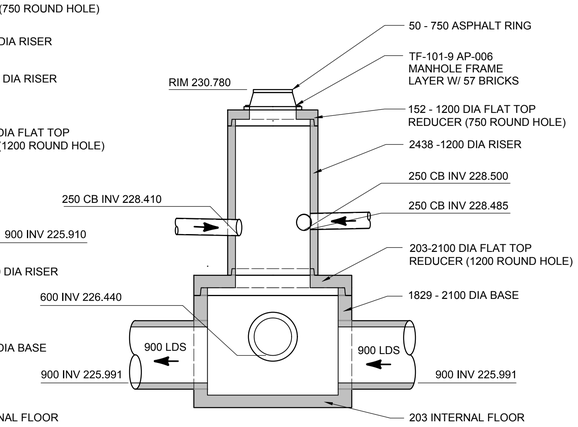

SECTION

5 MANHOLE S704

1 : 50

- ASSINIBOINE & COLLEGIATE

BID OPPORTUNITY No. 840-2019

NO.	REVISIONS	DATE	BY
	B.M. ELEV.		
00	ISSUED FOR TENDER	19.09.26	TRC

TETRA TECH

DESIGNED BY ML | CHECKED BY KJM, TRC
DRAWN BY GMD | APPROVED BY GS
HOR. SCALE: 1 : 50 | RELEASED FOR CONSTRUCTION
VERTICAL:
DATE 2019-09-26 | DATE

PROVINCE OF MANITOBA
T.R. CHRISTIANSEN
Member
34138
REGISTERED PROFESSIONAL ENGINEER

CONSULTANT DRAWING NO.
1000120300-DWG-C0207

Winnipeg

THE CITY OF WINNIPEG
WATER AND WASTE DEPARTMENT

FERRY ROAD AND RIVERBEND
COMBINED SEWER RELIEF WORKS
CONTRACT 7A

MANHOLE DETAILS

SHEET 1 OF 2

CITY DRAWING NUMBER LD-9540
SHEET 10 OF 12
C0710

ENGINEERS GEOSCIENTISTS MANITOBA
Certificate of Authorization
Tetra Tech Canada Inc.
No. 6499

X:\A-G\CITY OF WINNIPEG - WATER & WASTE DEPARTMENT - 0012110001203.00 - FERRY ROAD\CONTRACT 7\CAD\PRODUCTION DRAWINGS\7A\C0710 C0711 1000120300-DWG-C0207 MANHOLE DETAILS.DWG 2019-09-26 9:50 AM Dingle, Gary