GENERAL

.1 All WORK TO BE PERFORMED IN ACCORDANCE WITH THE MANITOBA BUILDING CODE 2011, MANITOBA WORKPLACE SAFETY AND HEALTH, LOCAL CODES, BYLAWS, ORDINANCES. AND SAFETY REGULATIONS.
.2 THE COMPLETE WORK TO BE GOVERNED BY THE DICTATES OF GOOD PRACTICE IN ALL DETAILS OF MATERIALS AND METHODS EVEN IF NOT MINUTELY SPECIFIED.
.3 THE DRAWINGS DESCRIBE THE COMPLETED PROJECT AND DO NOT INDICATE COMPONENTS THAT MAY BE NECESSARY FOR CONSTRUCTION SAFETY. THE CONTRACTOR IS RESPONSIBLE FOR SAFETY IN AND ABOUT THE JOB SITE DURING CONSTRUCTION, AND THE DESIGN AND ERECTION OF ALL TEMPORARY AND PERMANENT STRUCTURES, FORMWORK, FALSEWORK, SHORING, ETC., REQUIRED TO COMPLETE THE PROJECT. MAINTAIN THE SITE, AT LEAST ON A DAILY BASIS, FREE FROM ACCUMULATIONS OF WASTE MATERIAL AND DEBRIS. DISPOSE OF WASTE MATERIAL IN ACCORDANCE WITH LOCAL REGULATIONS.

LOADING

ALL LOADS AND FORCES SHOWN ARE SERVICE (UNFACTORED) LOADS IN KILOPASCAL (kPa) AND kN UNLESS NOTED OTHERWISE.

.1 DEAD LOADS
SELF WEIGHT, MATERIALS OF CONSTRUCTION, MECHANICAL, ELECTRICAL AND PERMANENT EQUIPMENT.

.2 LIVE LOADS

A) SUPERIMPOSED LIVE LOADS (UNFACTORED SERVICE)
MANHOLE COVER — HS 20 TRUCK

B) LATERAL EARTH PRESSURE
EARTH PRESSURE COEFFICIENT, K — 0.5
BACKFILL DENSITY — 2000 kg/m³

CAST-IN-PLACE CONCRETE

.1 ALL CONCRETE MIXES, PLACING, CURING, AND TESTING TO BE IN ACCORDANCE WITH CSA-A23.1-09/A23.2-09 CONCRETE MATERIALS AND METHODS OF CONCRETE CONSTRUCTION/METHODS OF TEST AND STANDARD PRACTICES FOR CONCRETE
.2 CONCRETE AND MIXTURES TO CONFORM TO CSA A3000-03 CEMENTITOUS MATERIALS COMPENDIUM
.3 CONCRETE MIXES TO BE IN ACCORDANCE WITH CSA-A23.1-09, ALTERNATIVE 1;

NO.	LOCATION	CLASS OF EXPOSURE	MAX WATER TO CEMENTIOUS MATERIAL RATIO	MIN. f'c (MPa)	AIR CONTENT CATEGORY	CURING TYPE
1	ALL CONCRETE	S2	0.45	32 @ 56d	2	2

.4 BEFORE PLACING SHOP DRAWINGS TO BE REVIEWED FOR EQUIPMENT, OPENINGS, ANCHOR BOLTS, EMBEDS, ETC. TO ENSURE COMPLETENESS.
.5 CONCRETE SLAB ARE SMOOTH TROWEL FINISH.
.6 TESTING:
A) AN INDEPENDENT INSPECTION/TESTING AGENCY WILL BE ENGAGED BY THE OWNER. RESULTS OF FIELD TESTS WILL BE REPORTED IMMEDIATELY TO THE CONTRACTOR. INSPECTION AND TESTING DOES NOT RELIEVE THE CONTRACTOR OF RESPONSIBILITY FOR QUALITY CONTROL AND CONTRACTUAL OBLIGATIONS.
B) TESTING FIRM WILL PREPARE THREE TEST CYLINDERS FROM EACH 50 CU.m. OF CONCRETE, OR FRACTION THEREOF, FOR EACH DAY, TYPE OF CONCRETE, OR TYPE OF STRUCTURAL COMPONENT. ONE SLUMP TEST AND ONE ENTRAINED AIR TEST FOR EACH SET OF CYLINDERS.
.7 USE COLD WEATHER CONCRETING METHODS WHEN THE MEAN AMBIENT TEMPERATURE FALLS BELOW +5°C. ADDITIONAL TEST CYLINDERS WILL BE PREPARED DURING COLD WEATHER CONCRETING AND FIELD CURED UNDER SAME CONDITIONS AS CONCRETE WHICH THEY REPRESENT.

CONCRETE REINFORCING

.1 CONCRETE REINFORCEMENT 400 MPA DEFORMED BARS.
.2 ALL STEEL TO BE DETAILED IN ACCORDANCE WITH CSA A23.1-09 CONCRETE MATERIALS AND STANDARD THE MANUAL OF PRACTICE BY THE REINFORCING INSTITUTE OF CANADA 2004.
.3 CLEAR COVER TO REINFORCING TO BE:
CONCRETE CAST AGAINST EARTH 75mm
ALL OTHER CONCRETE 50mm
.4 BEAMS AND SLABS: LAP TOP STEEL MIDSPAN AND BOTTOM STEEL OVER SUPPORTS.
.5 PROVID LAPS TO CSA A23.3 OR THE FOLLOWING MINIMUMS.
10M - 400mm
15M - 500mm
20M - 650mm
.6 ALL REINFORCING TO BE HELD IN PLACE AND TIED WITH PROPER ACCESSORIES, HI-CHAIRS AND SPACERS. DETAILED, SUPPLIED AND INSTALLED ALL ACCESSORIES. HI-CHAIRS TO HAVE 4 LEGS AND TO BE STAPLED/ NAILED TO THE FORMWORK.
.7 REINFORCING STEEL NOT TO BE WELDED, HEATED OR BENT ON-SITE WITHOUT PRIOR APPROVAL OF THE CONTRACT ADMINISTRATOR.

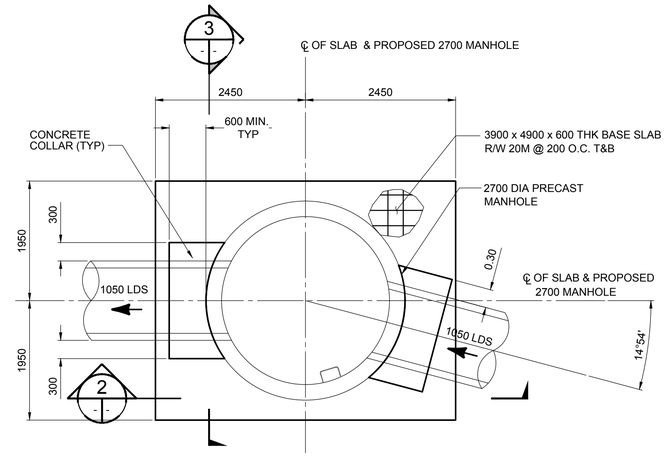

1 CONCRETE SLAB - PLAN
1 : 50

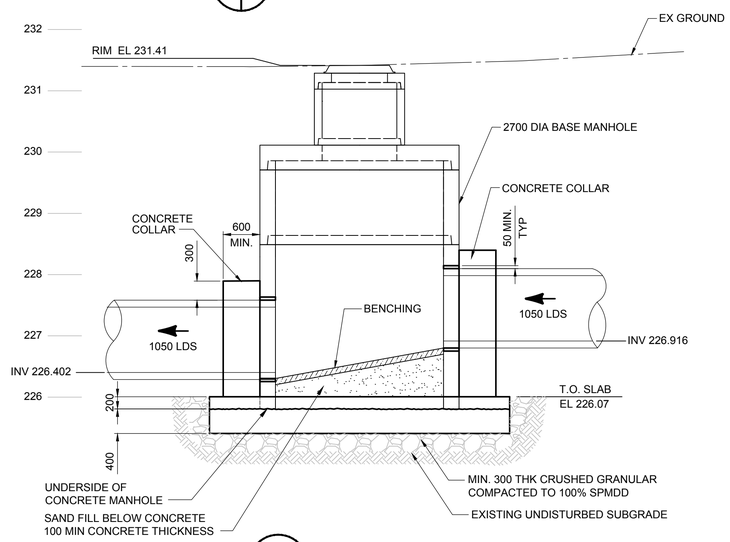

2 SECTION
1 : 50

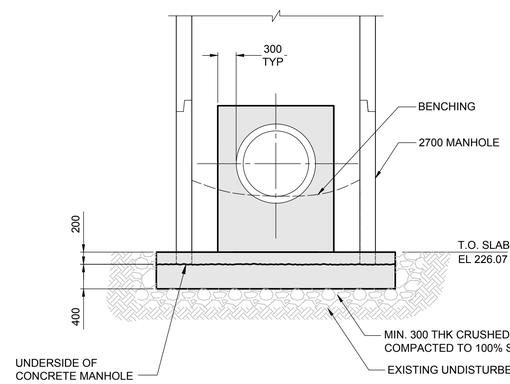

3 SECTION
1 : 50

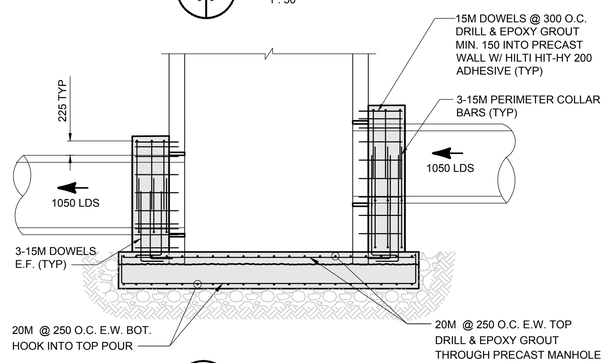

4 SECTION
1 : 50

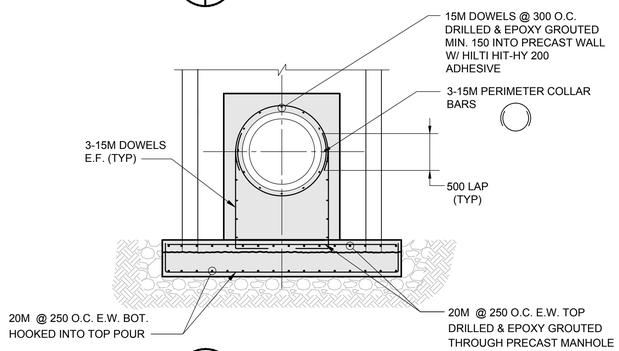

5 SECTION
1 : 50

BID OPPORTUNITY No. 840-2019

ENGINEERS GEOSCIENTISTS MANITOBA
Certificate of Authorization
Tetra Tech Canada Inc.
No. 6499

B.M. CITY OF WINNIPEG 38-069
ELEV. 233.792m

NO.	REVISIONS	DATE	BY
00	ISSUED FOR TENDER	19.09.26	TRC

TETRA TECH

DESIGNED BY	CM	CHECKED BY	KJM, TRC
DRAWN BY	GMD	APPROVED BY	GS
HOR. SCALE: / VERTICAL:	1 : 50	RELEASED FOR CONSTRUCTION	
DATE	2019-09-26	DATE	

PROVINCE OF MANITOBA — T.R. CHRISTIANSEN Member 34138 — REGISTERED PROFESSIONAL ENGINEER

CONSULTANT DRAWING NO.
1000120300-DWG-C0209

Winnipeg
THE CITY OF WINNIPEG
WATER AND WASTE DEPARTMENT

FERRY ROAD AND RIVERBEND
COMBINED SEWER RELIEF WORKS
CONTRACT 7A

BOURKEVALE PARK
MANHOLE S700
BASE AND COLLAR DETAILS

CITY DRAWING NUMBER LD-9542
SHEET 12 OF 12
C0712

X:\A-G\CITY OF WINNIPEG - WATER & WASTE DEPARTMENT - 0012\100012\03.00 - FERRY ROAD\CONTRACT 7\CAD\PRODUCTION DRAWINGS\7A\C0712 1000120300-DWG-C0209 MH S700.DWG 2019-09-26 9:52 AM Dingle, Gary