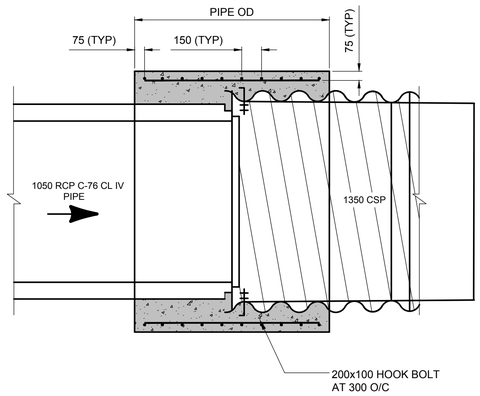

ELEVATION

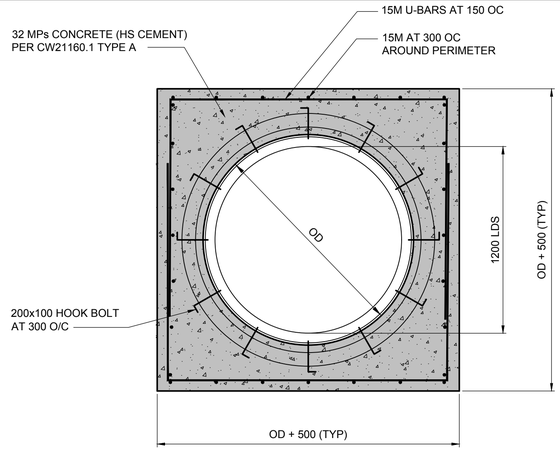

SECTION

1 - - CONCRETE COLLAR
1 : 20

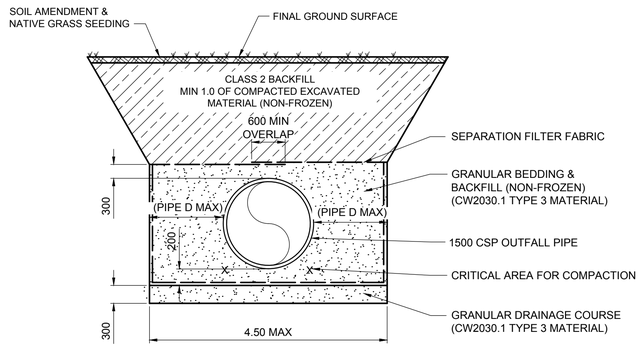

2 - - 1350 CSP TRENCH
1 : 50

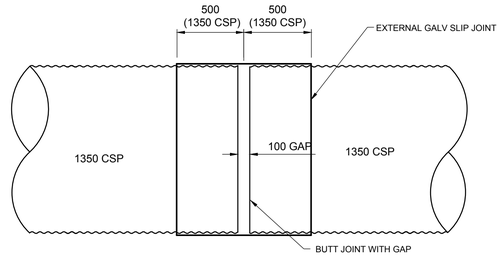

3 - - EXTERNAL SLIP JOINT
1 : 25

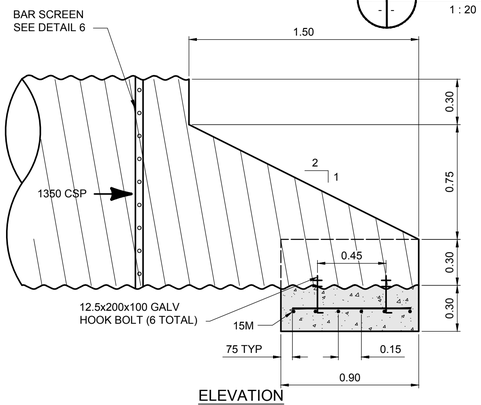

ELEVATION

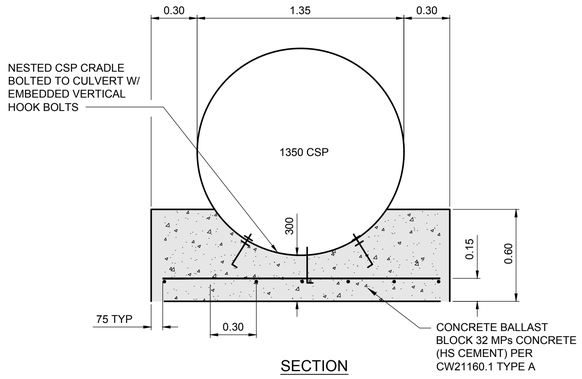

SECTION

4 - - 1350 CSP STEP BEVEL & BALLAST DETAIL
1 : 20

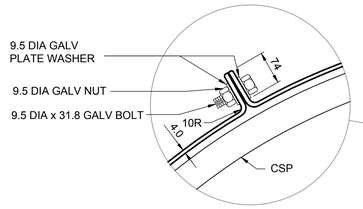

FIXED CONNECTION

- 2 REQ'D AT 120° ORIENTATION OR 2 REQ'D AT 180° ORIENTATION

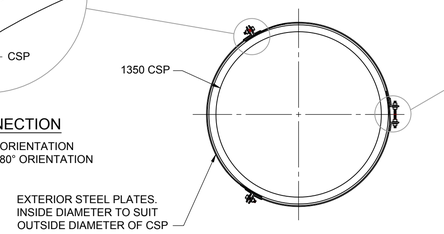

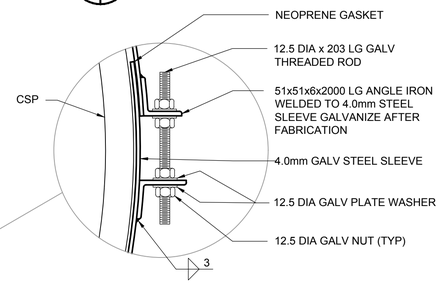

ADJUSTABLE CONNECTION

5 - - SECTION THROUGH SLIP JOINT
1 : 25

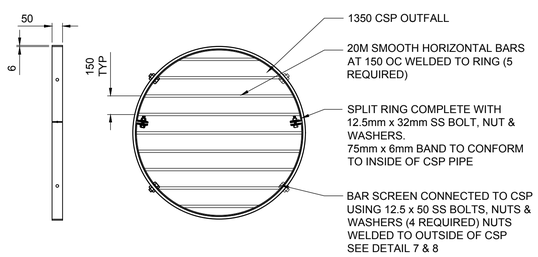

6 - - BAR SCREEN (FOR 1350 CSP)
1 : 25
- GALVANIZE ENTIRE ASSEMBLY AFTER FABRICATION

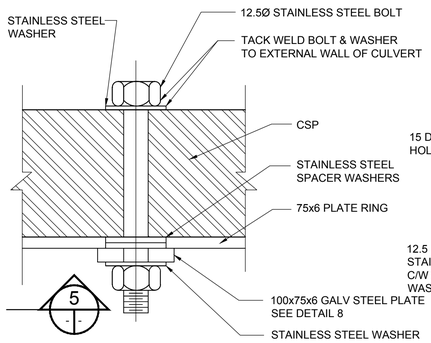

5 - -

7 - - BAR SCREEN BOLTING DETAIL
NTS

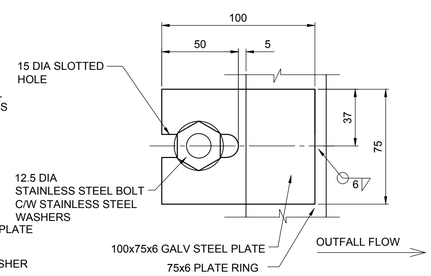

8 - - BAR SCREEN REMOVAL PLATE DETAIL
NTS

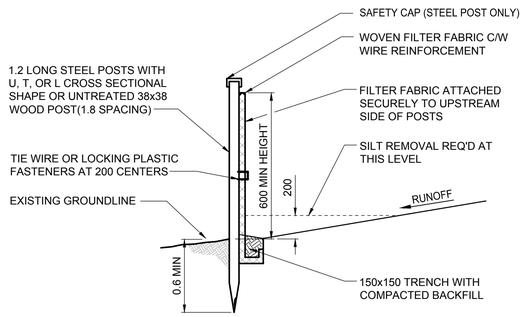

9 - - TYPICAL SILT FENCE DETAIL
NTS

NOTE:
J-HOOKS OR `SMILES` ARE TO BE USED FOR INSTALLATION.

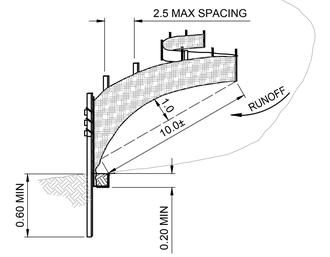

10 - - TYPICAL FENCING PLACEMENT
NTS

BID OPPORTUNITY No. 840-2019

ENGINEERS GEOSCIENTISTS MANITOBA
Certificate of Authorization
Tetra Tech Canada Inc.
No. 6499

B.M. CITY OF WINNIPEG 38-069
ELEV. 233.792m

NO.	REVISIONS	DATE	BY
00	ISSUED FOR TENDER	19.09.26	TRC

TETRA TECH

DESIGNED BY	TT	CHECKED BY	KJM, TRC
DRAWN BY	GMD	APPROVED BY	GS
HOR. SCALE: / VERTICAL:	AS NOTED	RELEASED FOR CONSTRUCTION	
DATE	2019-09-25	DATE	

PROVINCE OF MANITOBA
T.R. CHRISTIANSEN
Member
34138
REGISTERED PROFESSIONAL ENGINEER

CONSULTANT DRAWING NO.
1000120300-DWG-C0206

Winnipeg
THE CITY OF WINNIPEG
WATER AND WASTE DEPARTMENT

FERRY ROAD AND RIVERBEND
COMBINED SEWER RELIEF WORKS
CONTRACT 7A

OUTFALL DETAILS

CITY DRAWING NUMBER
LD-9539

SHEET 9 OF 12

C0709

2019-09-25 9:29 AM X:\A-G\CITY OF WINNIPEG - WATER & WASTE DEPARTMENT - 0012\100012\03.00 - FERRY ROAD\CONTRACT 7\CAD\PRODUCTION DRAWINGS\7A\C0709 1000120300-DWG-C0206 OUTFALL DETAILS.DWG\Dingle, Gary