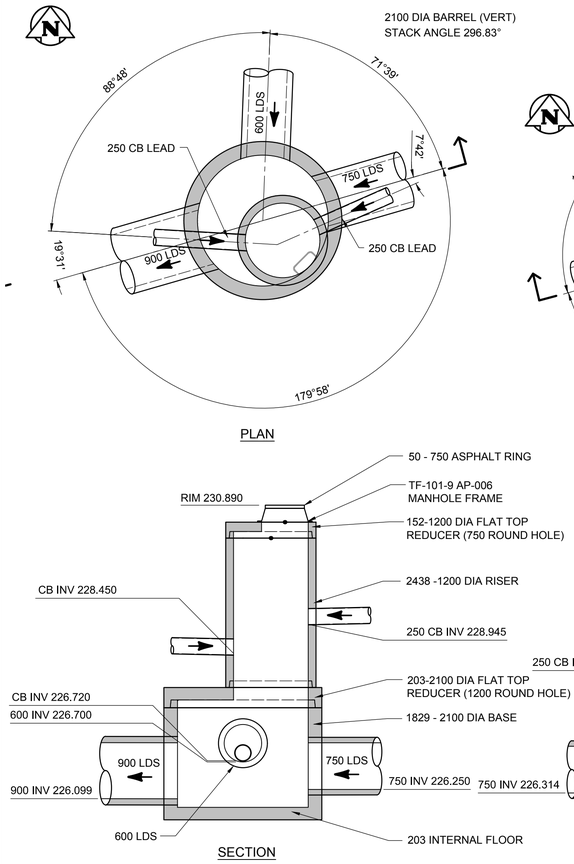

1 MANHOLE S705

1 : 50

- ASSINIBOINE & ROSEBERRY

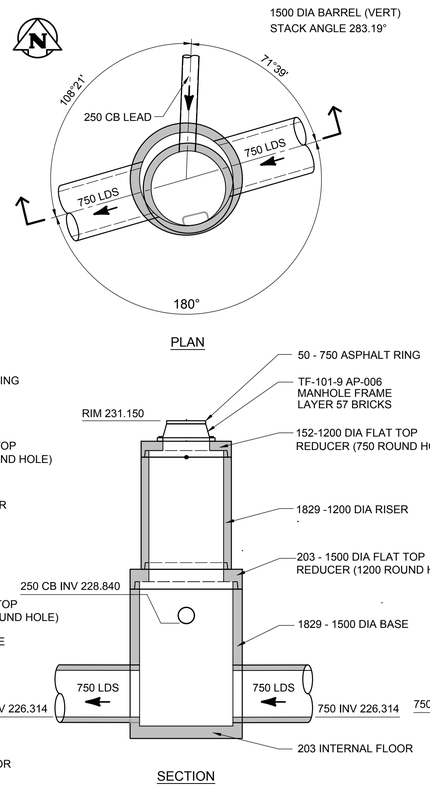

2 MANHOLE S706

1 : 50

- ON ASSINIBOINE BETWEEN ROSEBERRY & PARKVIEW

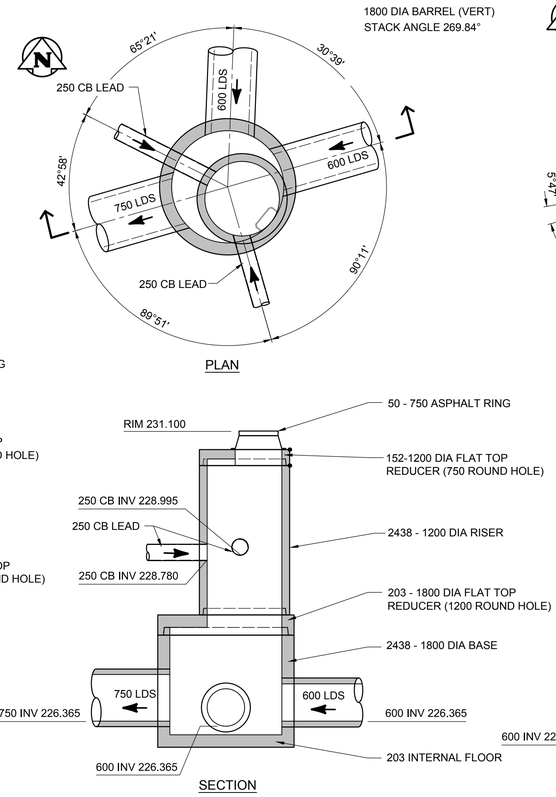

3 MANHOLE S707

1 : 50

- ASSINIBOINE & PARKVIEW

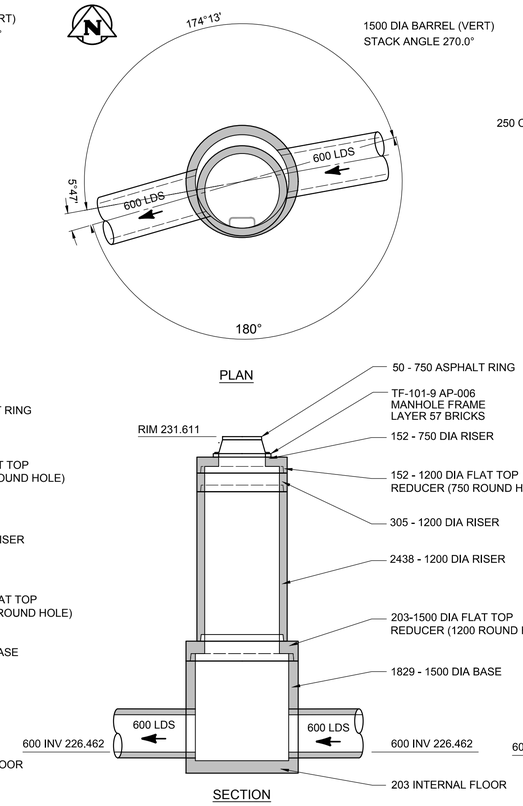

4 MANHOLE S708

1 : 50

- ON ASSINIBOINE BETWEEN PARKVIEW & RIVEROAKS

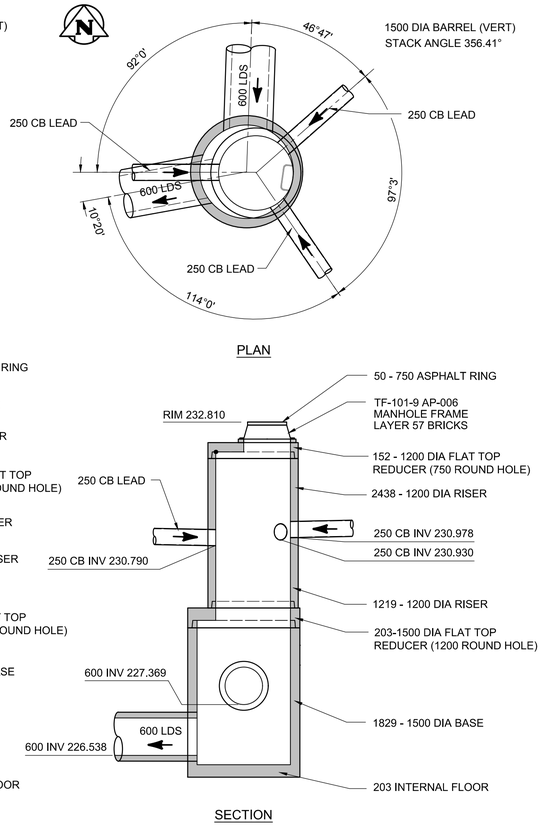

5 MANHOLE S709

1 : 50

-PARKVIEW & RIVEROAKS

BID OPPORTUNITY No. 840-2019

ENGINEERS GEOSCIENTISTS MANITOBA
Certificate of Authorization
Tetra Tech Canada Inc.
No. 6499

B.M.
ELEV.

NO.	REVISIONS	DATE	BY
00	ISSUED FOR TENDER	19.09.26	TRC

TETRA TECH

DESIGNED BY	ML	CHECKED BY	KJM, TRC
DRAWN BY	GMD	APPROVED BY	GS
HOR. SCALE: VERTICAL:	1 : 50	RELEASED FOR CONSTRUCTION	
DATE	2019-09-26	DATE	

PROVINCE OF MANITOBA
T.R. CHRISTIANSEN
Member
34138
REGISTERED PROFESSIONAL ENGINEER

CONSULTANT DRAWING NO.
1000120300-DWG-C0208

Winnipeg

THE CITY OF WINNIPEG
WATER AND WASTE DEPARTMENT

FERRY ROAD AND RIVERBEND
COMBINED SEWER RELIEF WORKS
CONTRACT 7A

MANHOLE DETAILS

SHEET 2 OF 2

CITY DRAWING NUMBER
LD-9541

SHEET 11 OF 12

C0711

X:\A-G\CITY OF WINNIPEG - WATER & WASTE DEPARTMENT - 0012\100001203.00 - FERRY ROAD\CONTRACT 7\CAD\PRODUCTION DRAWINGS\7A\C0710-C0711 1000120300-DWG-C0207 MANHOLE DETAILS.DWG 2019-09-26 9:50 AM Dingle, Gary