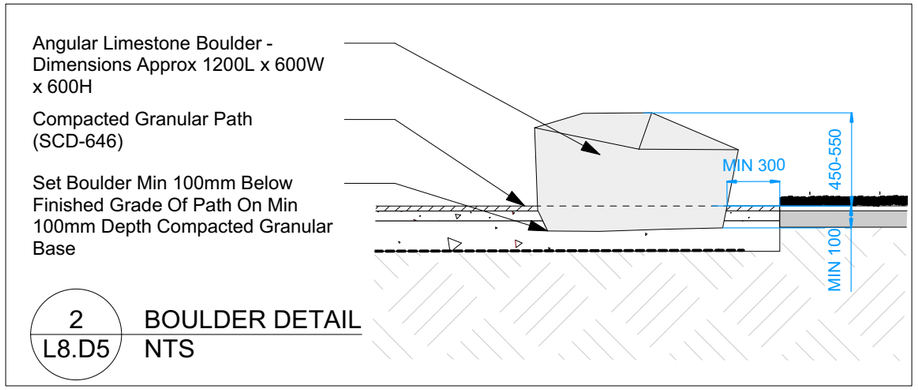

2 / L8.D5 BOULDER DETAIL
NTS

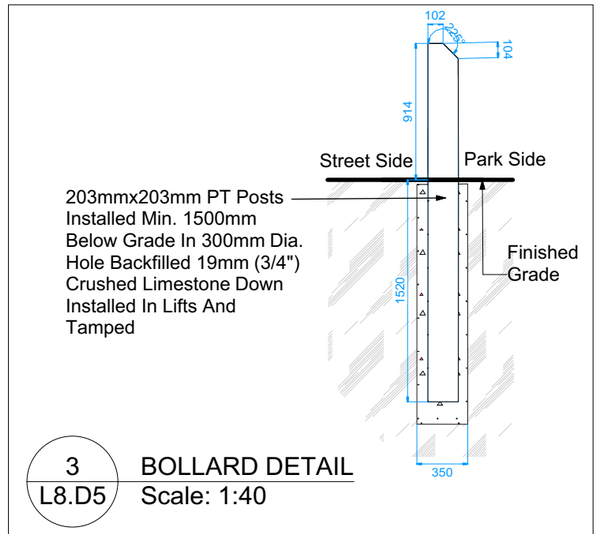

3 / L8.D5 BOLLARD DETAIL
Scale: 1:40

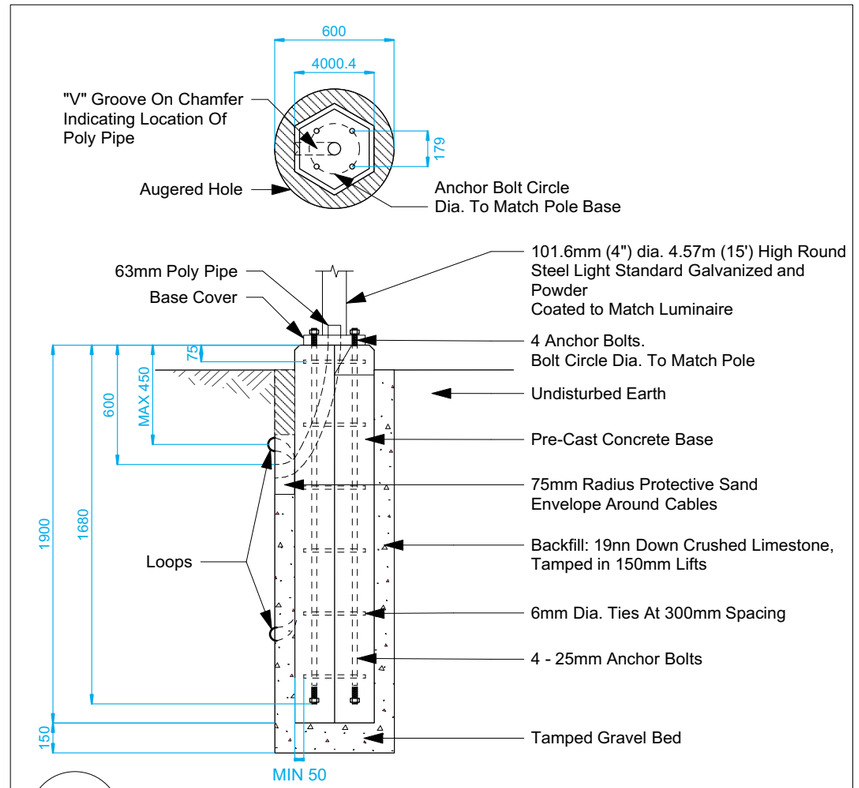

4 / L8.D5 PARK LIGHT PRECAST BASE DETAIL
NTS

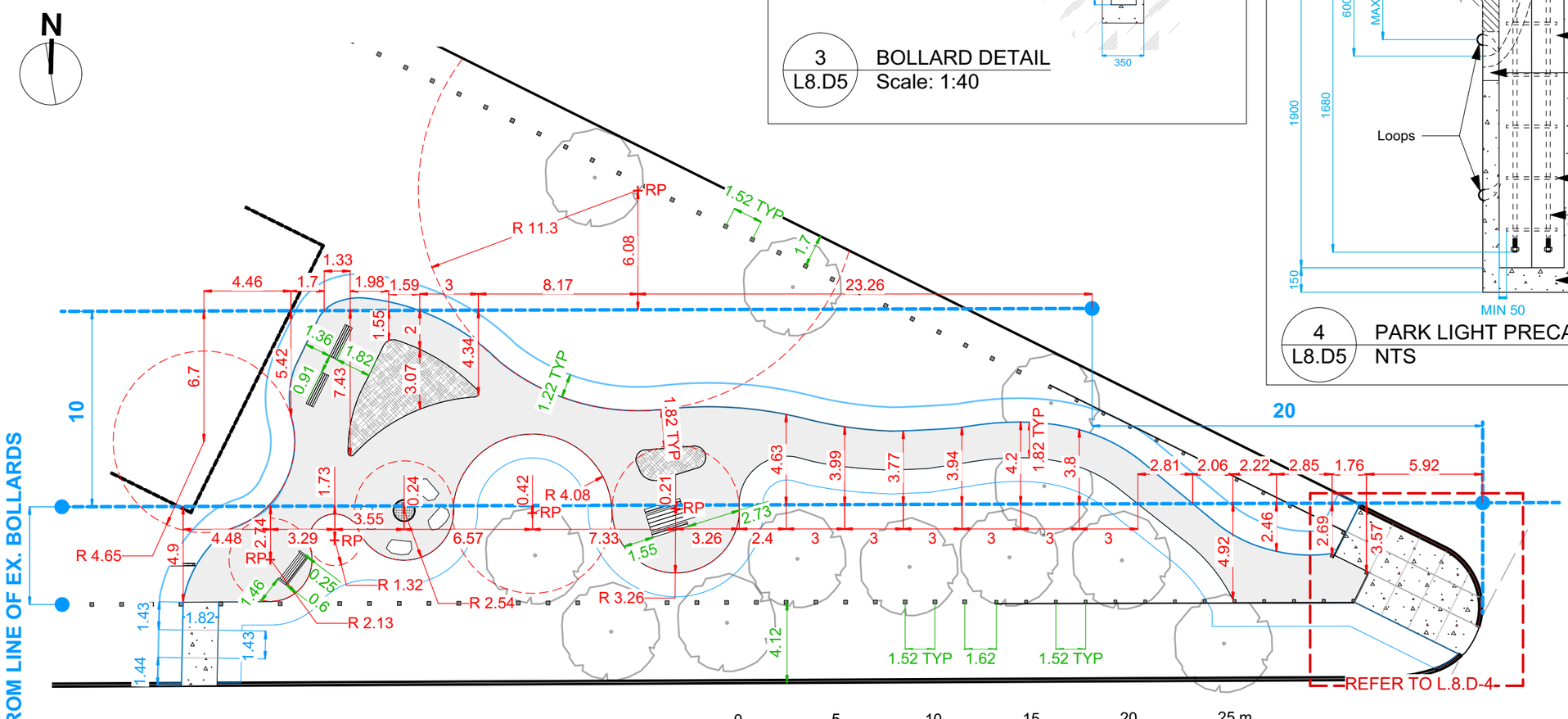

1 / L8.D5 LAYOUT PLAN
Scale: 1:250

LAYOUT NOTES

1. DIMENSIONS ARE IN METRES EXCEPT FENCE DETAILS L8.D-3, CIP CONCRETE PAVEMENT AND CURB DETAIL L8.D4 BOLLARD DETAIL L8.D-5, PARK LIGHT PRECAST BASE DETAIL L8.D-5 LIGHTING PILE AND BOULDER DETAIL L8.D-5
2. DIMENSIONS TO STREET CURB ARE TO OUTSIDE OF CURB
3. DIMENSIONS IN RED ARE FOR GRANULAR PATH AND SEATING AREA
4. DIMENSIONS IN GREEN ARE FOR FENCING, CIP CONCRETE CURB, SITE FURNITURE AND BOLLARDS
5. FENCE DIMENSIONS ARE TO POST CENTRES
   RP: RADIUS POINT
   R: RADIUS

CONTRACTOR TO CONFIRM ALL DIMENSIONS AND REPORT ANY DISCREPANCIES TO CONTRACT ADMINISTRATOR PRIOR TO CONSTRUCTION. LOCATION OF UNDERGROUND STRUCTURES AS SHOWN ARE BASED ON THE BEST INFORMATION AVAILABLE BUT NO GUARANTEE IS GIVEN THAT ALL EXISTING UTILITIES ARE SHOWN OR THAT THE GIVEN LOCATIONS ARE EXACT. CONFIRMATION OF EXISTENCE AND EXACT LOCATION OF ALL SERVICES MUST BE OBTAINED FROM THE INDIVIDUAL UTILITIES BEFORE PROCEEDING WITH CONSTRUCTION.

Winnipeg

THE CITY OF WINNIPEG
Planning, Property and Development Department
Planning and Land Use Division
Unit 15 - 30 Fort Street, Winnipeg, MB, (R3C 4X5)

DESIGNED BY	IM	CHECKED BY	
DRAWN BY	IM	APPROVED BY	
HORIZ. SCALE	1:250		
VERT. SCALE			
DATE	February 2020		

MANAGER, PARK AND OPEN SPACES — DATE

MANAGER, PLANNING AND LAND USE DIVISION — DATE

DRAWING TITLE
Lismore Park
Park Improvements
Layout Plan

SITE ADDRESS 1 Oddy Street

DRAWING NO.
L8.D-5

BID OPPORTUNITY NO.
132-2020

06-01-23 Template.mcd Monday, January 23, 2006