MATERIALS

WOOD SLATS:
- VERTICAL GRAIN CLEAR SITCA SPRUCE OR CLEAR CEDAR
- FINISH - SIKKENS CETOL No. 078 NATURAL **or** PAINTED FINISH: GREEN, WALNUT, CEDAR OR GREY (AS SPECIFIED)

METAL LEG OPTIONS:
- **BLACK POWDERCOATED** - (Metal suitably cleaned to remove any grease, wax etc. for proper paint bonding to occur. Base coat Zinc rich primer. Baked with a final thickness of paint between 5 - 8 mil

or

- **GALVANIZED**

Drawing Title:

TACHE STYLE METAL FRAME PICNIC TABLE

Drawing No:

SCD-122

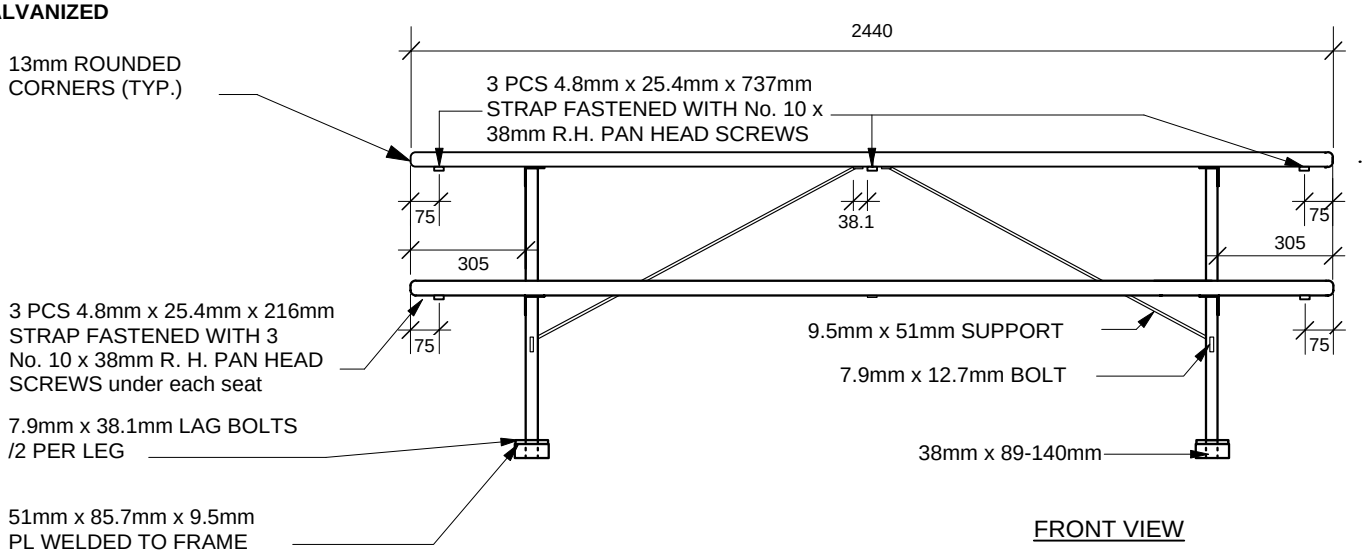

FRONT VIEW

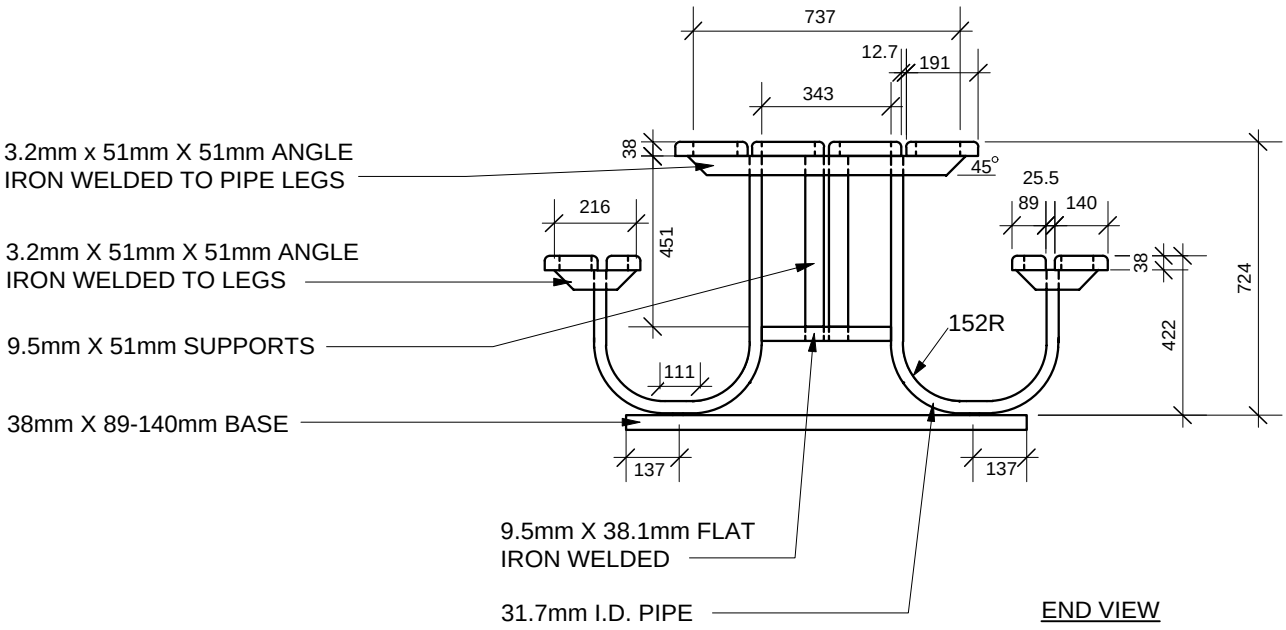

END VIEW

NOTE:
ALL TABLE TOP AND SEAT BOARDS TO BE FASTENED TO ANGLE IRONS WITH 8mm CARRIAGE BOLTS, SECURED WITH WASHER AND NUT.

DIMENSIONS SHOWN ARE IN MILLIMETRES UNLESS OTHERWISE SPECIFIED

REVISION: 1
DATE: January 12, 2012
SCALE: N.T.S.
DRAWN BY: SP

The City of Winnipeg
Planning, Property and Development Department
Parks, Waterways & Community Initiatives Division
Unit 15 - 30 Fort Street, Winnipeg, MB, R3C 4X5