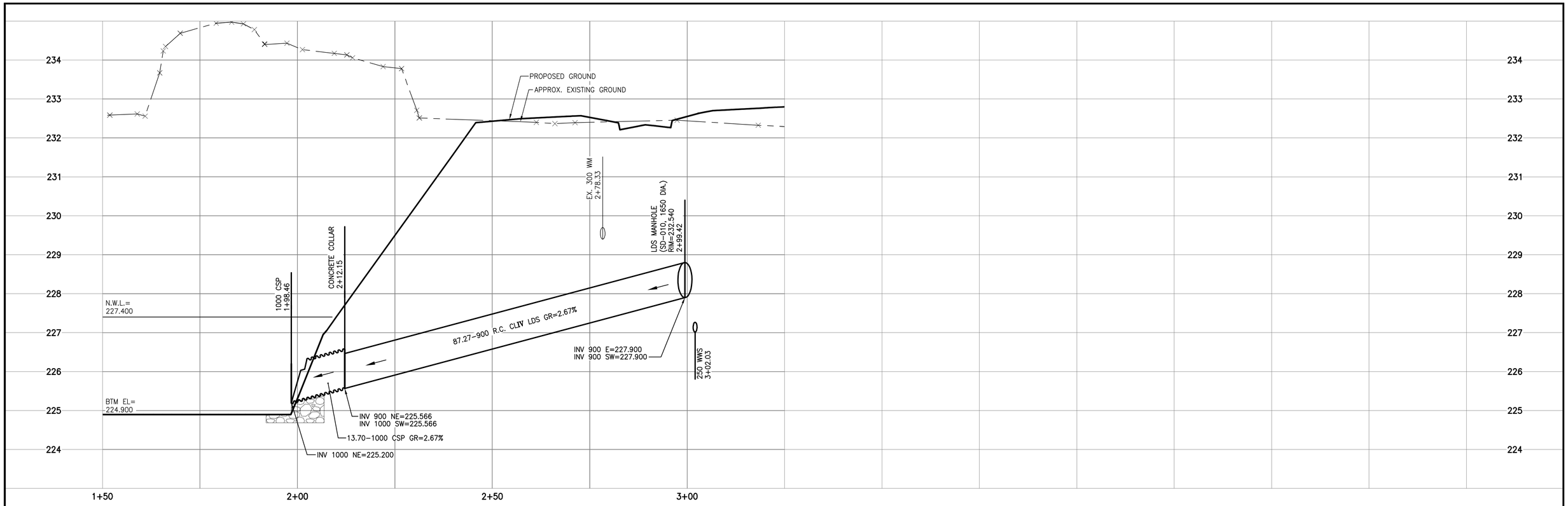

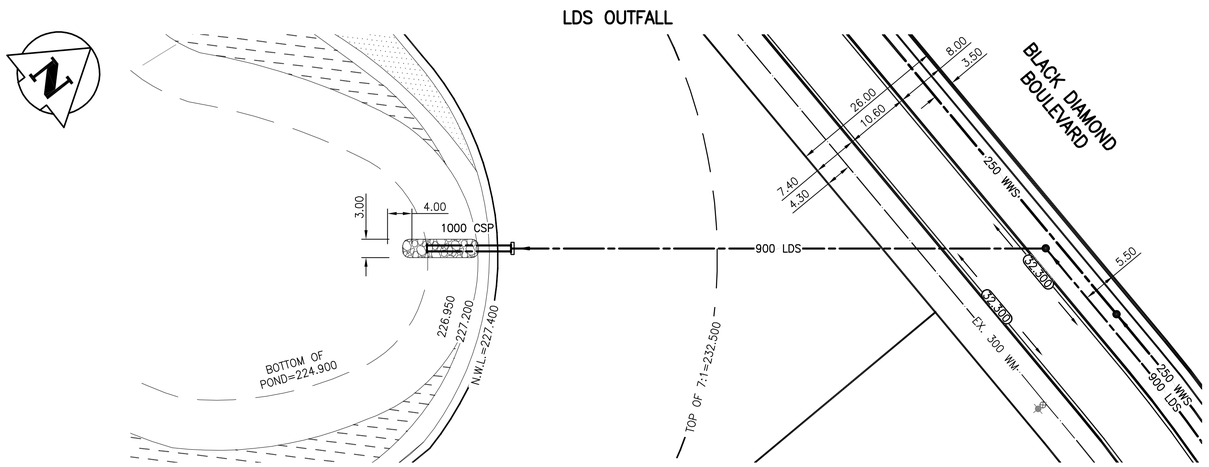

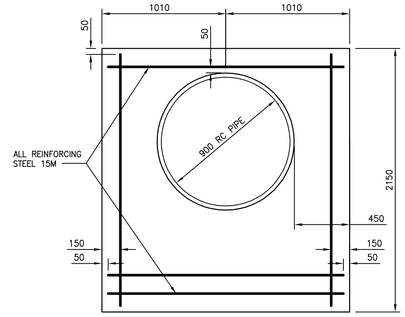

DETAILS OF CONCRETE COLLAR
FOR 900 LDS OUTFALL
N.T.S.

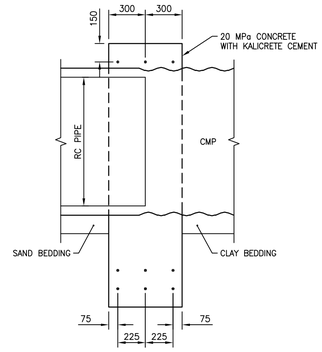

WARNING

IF POWER EQUIPMENT OR EXPLOSIVES ARE TO BE USED FOR EXCAVATION ON THIS PROJECT THE CONTRACTOR MUST:

1) NOTIFY THE GAS COMPANY OF THE PROPOSED LOCATION OF EXCAVATION.

2) TAKE PRECAUTION TO AVOID DAMAGE TO GAS COMPANY INSTALLATIONS.

SEE PROVINCIAL REGULATION 140/92 FOR DETAILS

METRIC

WHOLE NUMBERS INDICATE MILLIMETRES
DECIMALIZED NUMBERS INDICATE METRES

NOTES:

1. CHAINAGES SHOWN ARE ALONG CENTERLINE OF ROAD.
2. SUBDRAINS 18.00m EACH SIDE OF CATCH BASINS (SD-245).
3. ALL PIPE UNDER EXISTING AND FUTURE PAVEMENT ARE INSTALLED BY TRENCHLESS METHODS.
4. ALL LONG ASSEMBLY HYDRANTS (SD-006)
   ALL SHORT ASSEMBLY HYDRANTS (SD-007).

BENCHMARK: N.W. Cor. of Mazenod Rd. & G.W.W.D. R.O.W., 19 mm dia. x 4.6 m I.B. in Valve Box, 3.0 m W. of W.L. of Mazenod Rd. & 4.0 m N. of N. rail of tracks in G.W.W.D. R.O.W.

1:500H 0 5 15 25m
1:50V 0 0.5 1.5 2.5m

ENGINEERS GEOSCIENTISTS MANITOBA
Certificate of Authorization
Stantec Consulting Ltd.
No. 1301

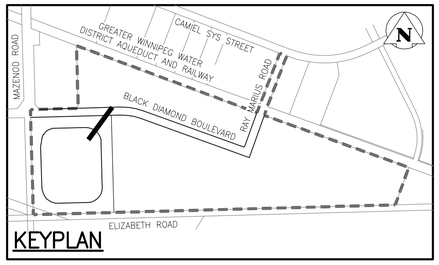

KEYPLAN

150 WM	WATERMAIN	150 WM		HYDRO		150 WM	WATERMAIN	150 WM
	HYDRANT			M.T.S.			HYDRANT, VALVE	
	VALVE			CONCRETE		300 LDS	LAND DRAINAGE SEWER	300 LDS
300 LDS	LAND DRAINAGE SEWER	300 LDS		ASPHALT		250 WWS	WASTE WATER SEWER	250 WWS
250 WWS	WASTE WATER SEWER	250 WWS		SIDEWALK			℄ PROFILE	
	MANHOLE			PROPERTY LINE			NORTH OR WEST GUTTER	
	CATCH BASIN			SURVEY BAR			SOUTH OR EAST GUTTER	
	CURB INLET			DITCH			NORTH OR WEST ℙ	
	JUNCTIONS		31.334	ROAD ELEVATION	32.231		SOUTH OR EAST ℙ	
	CULVERT						NORTH OR WEST DITCH	
	GAS						SOUTH OR EAST DITCH	
EXISTING	LEGEND-PLAN	PROPOSED	EXISTING	LEGEND-PLAN	PROPOSED	EXISTING	LEGEND-PROFILE	PROPOSED

LOCATION APPROVED
UNDERGROUND STRUCTURES

SUPV. U/G STRUCTURES COMMITTEE — DATE

NOTE:
LOCATION OF UNDERGROUND STRUCTURES AS SHOWN ARE BASED ON THE BEST INFORMATION AVAILABLE BUT NO GUARANTEE IS GIVEN THAT ALL EXISTING UTILITIES ARE SHOWN OR THAT THE GIVEN LOCATIONS ARE EXACT. CONFIRMATION OF EXISTENCE AND EXACT LOCATION OF ALL SERVICES MUST BE OBTAINED FROM THE INDIVIDUAL UTILITIES BEFORE PROCEEDING WITH CONSTRUCTION.

B.M. 32-005
ELEV. 231.677

NO.	REVISIONS	YY.MM.DD.	BY
1	SUBMITTED FOR CITY REVIEW	20.03.27	P.J.S.

Stantec
500 - 311 Portage Avenue, Winnipeg MB Canada R3B 2B9
Tel. 204.489.5900 Fax. 204.453.9012 www.stantec.com

DESIGNED BY	P.J.S.	CHECKED BY	J.D.K.
DRAWN BY	L.D.	APPROVED BY	P.J.S.
HOR. SCALE:	1:500	RELEASED FOR CONSTRUCTION:	
VERTICAL:	1:50		
DATE	2020 .02 .18	DATE	

ENGINEER'S SEAL
PROVINCE OF MANITOBA
P.J. SUNDERLAND
REGISTERED PROFESSIONAL ENGINEER

CONSULTANT DRAWING NO.
C-207

Winnipeg

THE CITY OF WINNIPEG

ST. BONIFACE INDUSTRIAL PARK - PH 2 - STAGE 2&3

LDS OUTFALL

SHEET 10 OF 11

CAD FILE DRAWING NUMBER
09351C-207_PH2-2&3.DWG

CITY DRAWING NUMBER

\\A\1168\active\11680935\1\0300_drawing\0302_sheet_files\02_civil\phase_2-stage_2&3 (2017cad)\09351c-207_ph2-2&3.dwg
2020/03/26 4:05 PM By: Duecks, Lathonda