A1 SIZE – 594mm x 841mm

GENERAL NOTES:

1. ALL EQUIPMENT AND CABLING SHOWN IS NEW AND IS TO BE PROVIDED BY THE CONTRACTOR UNLESS OTHERWISE INDICATED AS EXISTING.
2. MCC–F71 AND MCC–F72 EMPTY SPACES ARE NOT SHOWN ON THIS DRAWING. REFER TO DRAWING 1–0173F–E0010 FOR AVAILABLE SPACES.

SPECIFIC NOTES:

1. ROUTE AND TERMINATE PREVIOUSLY DISCONNECTED EXISTING CONDUCTORS AT MCC–F71. CABLES SHALL BE SPACED A MINIMUM OF 100% CABLE DIAMETER USING MANUFACTURED SPACER BLOCKS. PROVIDE AND INSTALL NEW STRUT SUPPORTS COMPLETE WITH SPACER BLOCKS AT INTERVALS NOT EXCEEDING 1.5M.
2. EXISTING PADMOUNT 300 kVA TRANSFORMER TO BE REUSED. TRANSFORMER TO BE TAPPED DOWN TO 585V DUE TO 550V MOTOR LOADS.
3. EXISTING CUSTOMER SERVICE TERMINATION ENCLOSURE (CSTE) INCLUDING REMOTE METER ENCLOSURE TO BE REUSED.
4. PROVIDE AND INSTALL NEW 600V MOTOR CONTROL CENTRE.
5. MCC SUPPLIER TO PROVIDE AND INSTALL CONTROL TRANSFORMER FOR POWERING DIGITAL TRIP UNIT.
6. PROVIDE AND INSTALL NEW ELECTRIC DUCT HEATER.
7. PROVIDE AND INSTALL NEW FAN.
8. PROVIDE AND INSTALL NEW UNIT HEATER.
9. RE–CONNECT NEW POWER WIRING TO EXISTING FLOOD PUMP MOTOR.
10. PROVIDE AND INSTALL NEW 600:120/240V DRY–TYPE TRANSFORMER.
11. PROVIDE AND INSTALL NEW 120/240V PANELBOARD.
12. METERING CURRENT TRANSFORMERS ARE TO BE LOCATED OUTSIDE OF SERVICE ENTRANCE COMPARTMENT FOR CUSTOMER ACCESS.
13. PROVIDE AND INSTALL NEW LOAD–BREAK RATED DISCONNECT SWITCH. SWITCH SHALL BE RATED FOR ZONE 1, GROUP IIA HAZARDOUS LOCATIONS AND BE CAPABLE OF BEING LOCKED IN THE OPENED POSITION.
14. RE–CONNECT NEW POWER WIRING TO EXISTING FAN.

BREAKER PROTECTION SETTINGS

CIRCUIT BREAKER	MODEL	TRIP UNIT	FRAME	SENSOR/ TRIP UNIT	LTPU (Ir)	LTD (tr)	STPU (Isd)	STD (tsd)	INST (Ii)
MCC–F71.MCB	POWERPACT L SERIES	MICROLOGIC 5.3A (AMMETER)	800A	600A	600A	4 SEC.	5.5	0.2	5 (3000A)
MCC–F71.CB–F72	POWERPACT L SERIES	MICROLOGIC 3.3S	400A	400A	400A	4 SEC.	5.5	–	5 (2000A)
MCC–F71.MCP–F62	POWERPACT H SERIES	MICROLOGIC T–M	150A	(IN) 30A	(FLA) 1.5	–	–	–	(IM) AUTO – 1X
MCC–F71.MCP–F65	POWERPACT H SERIES	MICROLOGIC T–M	150A	(IN) 30A	(FLA) 1.5	–	–	–	(IM) AUTO – 1X
MCC–F71.MCP–F66	POWERPACT H SERIES	MICROLOGIC T–M	150A	(IN) 30A	(FLA) 6	–	–	–	(IM) AUTO – 1X
MCC–F72.CB–F01	POWERPACT J SERIES	MICROLOGIC 3.2	250A	250A	–	–	–	–	4X
MCC–F72.CB–F02	POWERPACT J SERIES	MICROLOGIC 3.2	250A	200A	–	–	–	–	4X
MCC–F72.CB–F03	POWERPACT J SERIES	MICROLOGIC 3.2	250A	250A	–	–	–	–	4X

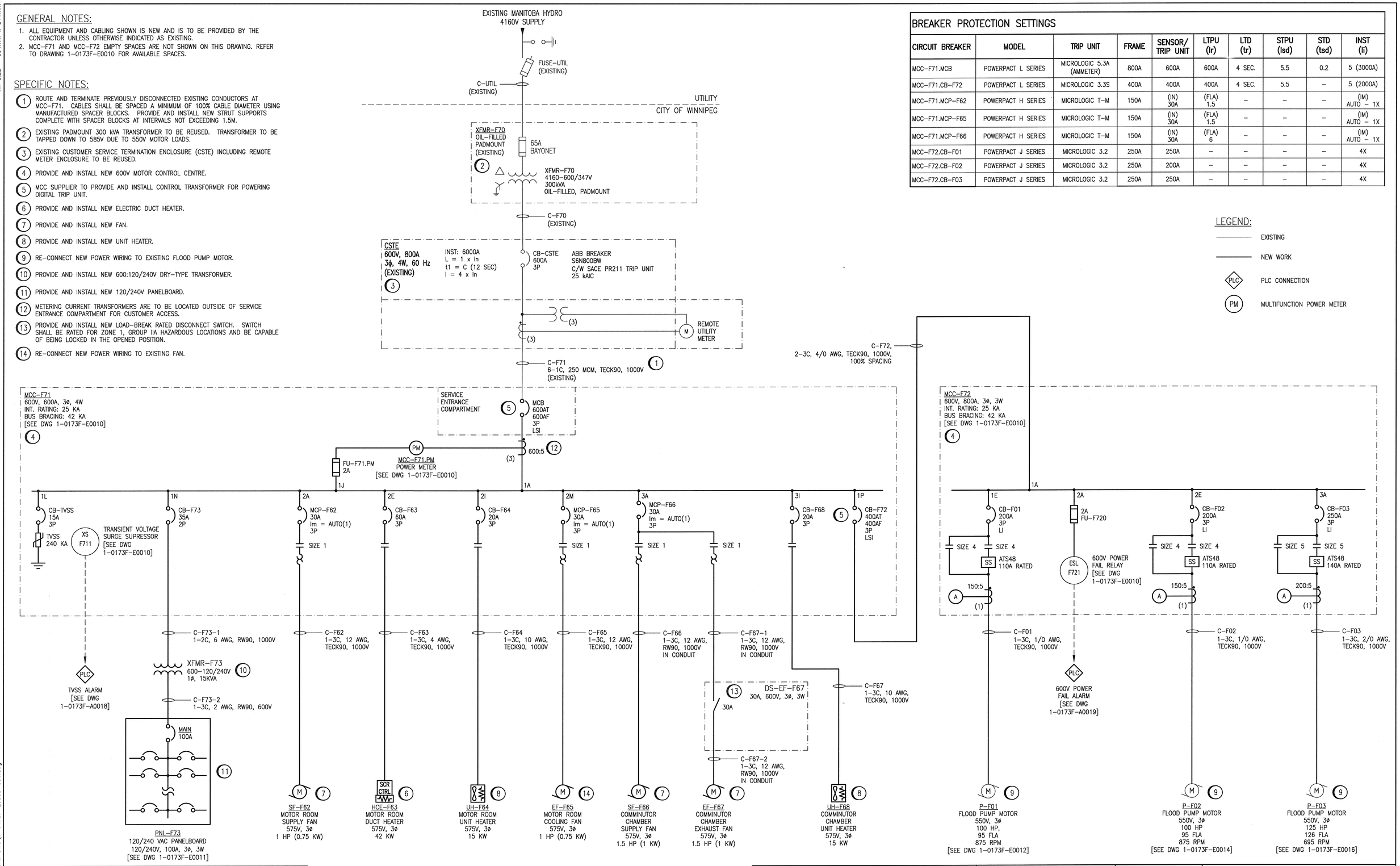

LEGEND:

- EXISTING
- NEW WORK
- PLC CONNECTION
- PM MULTIFUNCTION POWER METER

DRAWING NUMBER	REFERENCE DRAWINGS
1–0173F–E0011	ELECTRICAL SCHEDULES PNL–F73, LUMINAIRE AND EMERGENCY LIGHTING
1–0173F–E0010	MCC ELEVATION AND DETAILS MCC–F71 AND MCC–F72
1–0173F–E0007	ELECTRICAL PLAN LAYOUT WET WELL AND DRY WELL AREA
1–0173F–E0006	ELECTRICAL PLAN LAYOUT MOTOR ROOM & COMMINUTOR CHAMBER AREA

APEGM Certificate of Authorization SNC-Lavalin Inc. No. 4489

NO.	REVISIONS	DATE	DESIGN	CHECK
00	ISSUED FOR CONSTRUCTION	2020/08/19	KS	BC

SNC·LAVALIN

SNC–LAVALIN INC.
148 Nature Park Way
Winnipeg, MB, Canada R3P 0X7
204–786–8080

DESIGNED BY: K. SAPIAK	CHECKED BY: B. CLEVEN
DRAWN BY: K. SAPIAK	APPROVED BY: B. CLEVEN
SCALE: N.T.S.	ISSUED FOR CONSTRUCTION BY: K. ZUREK
DATE: 2020/03/17	DATE: 2020/08/19
CONSULTANT NO.:	

ENGINEER'S SEAL
PROVINCE OF MANITOBA
2020-08-19
K. K. SAPIAK
Member
33675
REGISTERED PROFESSIONAL ENGINEER

Winnipeg
THE CITY OF WINNIPEG
WATER AND WASTE DEPARTMENT

POLSON FLOOD PUMPING STATION
2020 UPGRADES
ELECTRICAL SINGLE LINE DIAGRAM

CITY DRAWING NUMBER	SHEET	REV.	SIZE
1–0173F–E0005	001	00	A1

1–0173F–E0005–001.dwg

LAST SAVE: 2020/08/19 – 7:10am
PATH: M:\672795\4ENG\47ELE\DD – General DWG\1–0173F–E0005–001.dwg