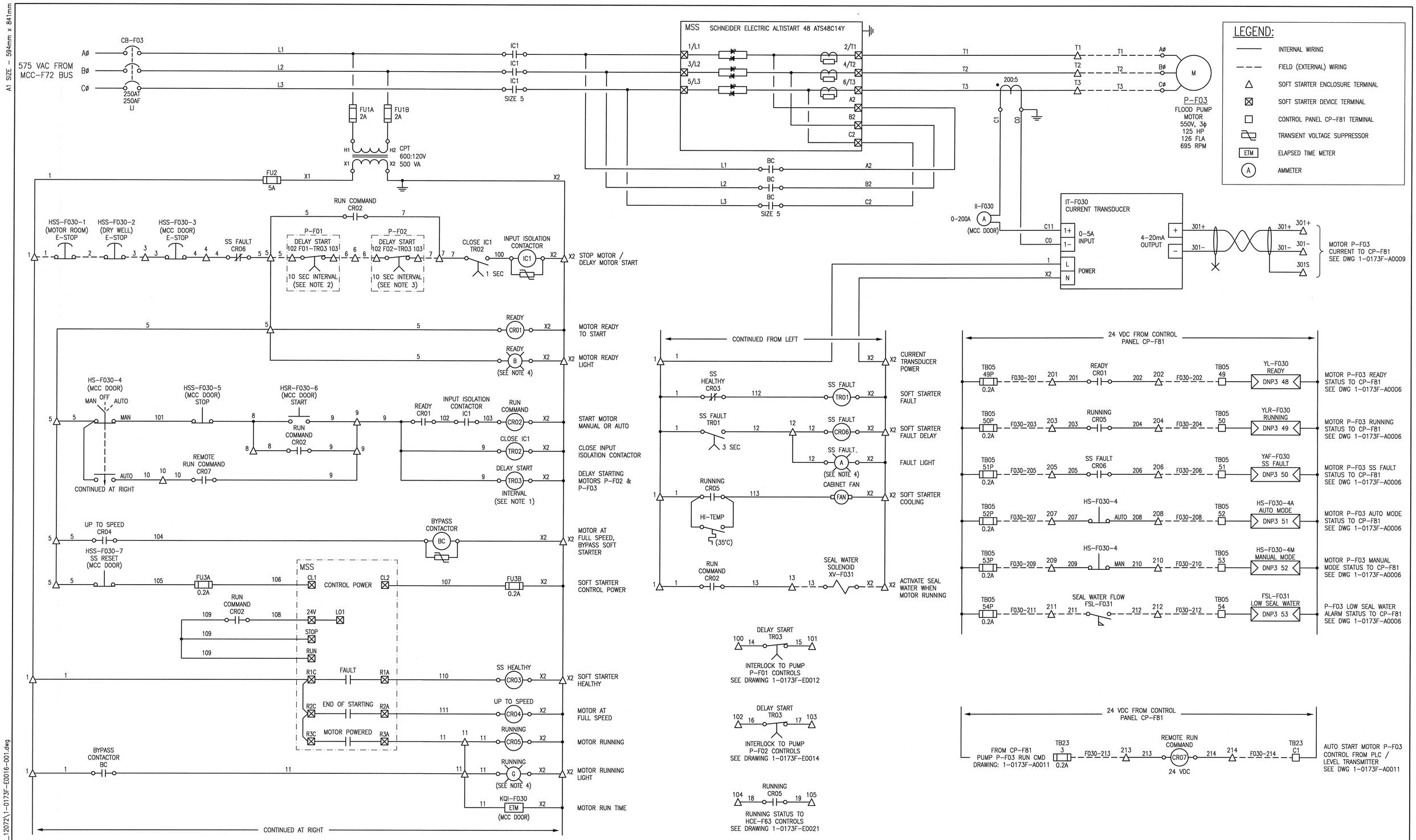

DRAWING NUMBER	REFERENCE DRAWINGS
1-0173F-E0017	CONNECTION DIAGRAM MS-F03 FLOOD PUMP
1-0173F-E0005	ELECTRICAL SINGLE LINE DIAGRAM

GENERAL NOTES:

1. THE INTERVAL TIMING RELAY IS TO BE INTERLOCKED WITH P-F01 AND P-F02 MOTOR STARTERS TO PREVENT MULTIPLE PUMPS FROM STARTING AT THE SAME TIME AND POTENTIALLY TRIPPING OUT THE ENTIRE DISTRIBUTION.
2. THE TIMING INTERVAL CONTACT SHALL REMAIN CLOSED AND OPEN ONCE WHEN PUMP P-F01 ELECTRIC MOTOR IS STARTED. ONCE THE DELAY PERIOD IS FINISHED, THE TIMING INTERVAL CONTACT SHALL CLOSE.
3. THE TIMING INTERVAL CONTACT SHALL REMAIN CLOSED AND OPEN ONCE WHEN PUMP P-F02 ELECTRIC MOTOR IS STARTED. ONCE THE DELAY PERIOD IS FINISHED, THE TIMING INTERVAL CONTACT SHALL CLOSE.
4. LIGHT IS MOUNTED ON MCC DOOR AND SHALL HAVE PUSH-TO-TEST FEATURE WIRED IN THAT IS NOT SHOWN ON THIS DRAWING.

APEGM Certificate of Authorization
SNC-Lavalin Inc.
No. 4489

NO.	REVISIONS	DATE	DESIGN	CHECK
00	ISSUED FOR CONSTRUCTION	2020/08/19		

SNC·LAVALIN
SNC-LAVALIN INC.
148 Nature Park Way
Winnipeg, MB, Canada R3P 0X7
204-786-8080

DESIGNED BY: K. SAPIAK	CHECKED BY: B. CLEVEN
DRAWN BY: K. SAPIAK	APPROVED BY: B. CLEVEN
SCALE: N.T.S.	ISSUED FOR CONSTRUCTION BY: K. ZUREK
DATE: 2020/05/29	DATE: 2020/08/19
CONSULTANT NO.:	

ENGINEER'S SEAL
PROVINCE OF MANITOBA
2020-08-19
K. K. SAPIAK
Member 33678
REGISTERED PROFESSIONAL ENGINEER

Winnipeg
THE CITY OF WINNIPEG
WATER AND WASTE DEPARTMENT

POLSON FLOOD PUMPING STATION
2020 UPGRADES
MOTOR STARTER SCHEMATIC
MS-F03
FLOOD PUMP

CITY DRAWING NUMBER	SHEET	REV.	SIZE
1-0173F-E0016	001	00	A1

1-0173F-E0016-001.dwg

A1 SIZE – 594mm x 841mm

LAST SAVE: 2020/08/19 – 8:00am
PATH: C:\Users\konly\appdata\local\temp\AcPublish_12072\1-0173F-E0016-001.dwg