A1 SIZE – 594mm x 841mm

MCC–F71 REQUIREMENTS:

IDENTIFIER: MCC–F71		
ENCLOSURE TYPE: NEMA 1A	MOUNTING: FRONT	DEPTH: 508mm
SUPPLY VOLTAGE: 600V, 3ø, 4W, 60 Hz		INCOMING NEUTRAL TERMINATION: YES
CONTROL VOLTAGE: 120V, 60 Hz	WIRING: CLASS I, TYPE Bd OR Bt AS SHOWN ON THE DRAWINGS	
MINIMUM BUS RATING:	HORIZONTAL: 600A	VERTICAL: AS REQ'D
SUITABLE FOR SERVICE ENTRANCE: NO		NEUTRAL BUS: YES
BUS BRACING: 42kA	SCCR: 25 kA	SERIES SCCR PERMITTED: NO
BUS MATERIAL: TIN PLATED COPPER		
MANUFACTURER: SCHNEIDER ELECTRIC		MODEL: MODEL 6

MCC–F72 REQUIREMENTS:

IDENTIFIER: MCC–F72		
ENCLOSURE TYPE: NEMA 1A	MOUNTING: FRONT	DEPTH: 508mm
SUPPLY VOLTAGE: 600V, 3ø, 3W, 60 Hz		INCOMING NEUTRAL TERMINATION: NO
CONTROL VOLTAGE: 120V, 60 Hz	WIRING: CLASS I, TYPE Bd OR Bt AS SHOWN ON THE DRAWINGS	
MINIMUM BUS RATING:	HORIZONTAL: 600A	VERTICAL: AS REQ'D
SUITABLE FOR SERVICE ENTRANCE: NO		NEUTRAL BUS: NO
BUS BRACING: 42kA	SCCR: 25 kA	SERIES SCCR PERMITTED: NO
BUS MATERIAL: TIN PLATED COPPER		
MANUFACTURER: SCHNEIDER ELECTRIC		MODEL: MODEL 6

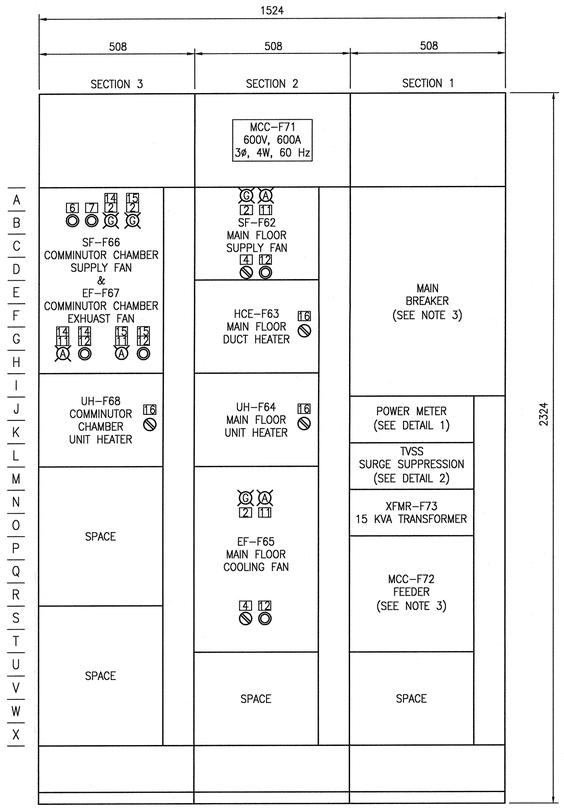

MCC–F71 ELEVATION
SCALE: 1 : 10

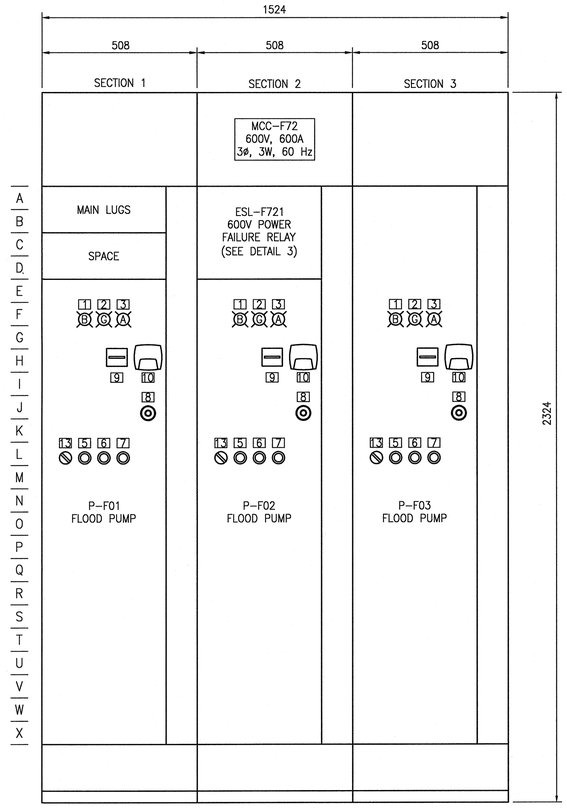

MCC–F72 ELEVATION
SCALE: 1 : 10

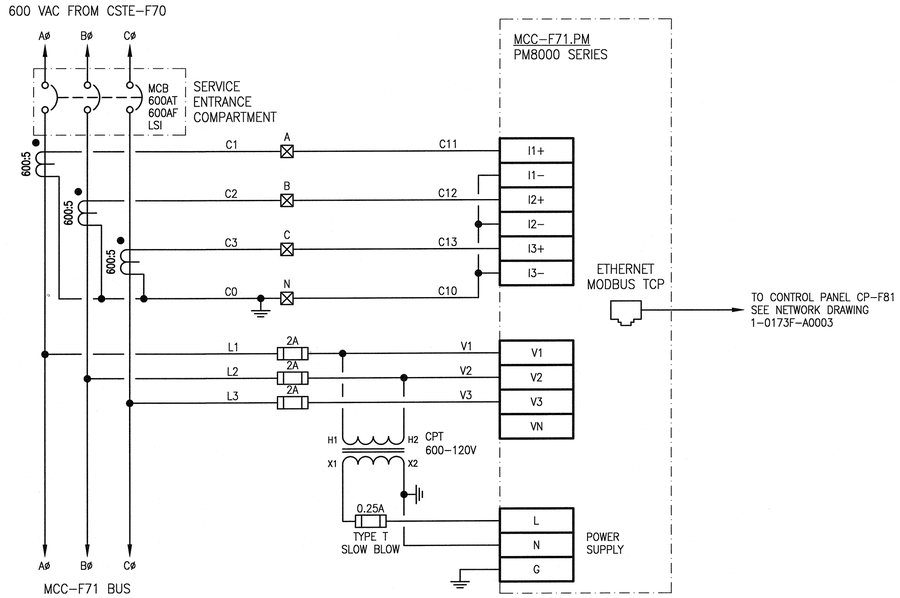

1 – MCC–F71 POWER METER
SCALE: N.T.S.

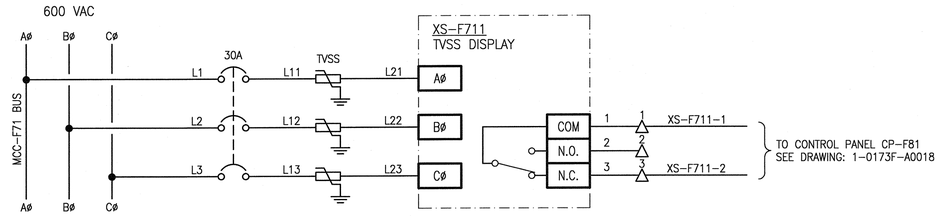

2 – XS–F711 TRANSIENT VOLTAGE SURGE SUPRESSOR
SCALE: N.T.S.

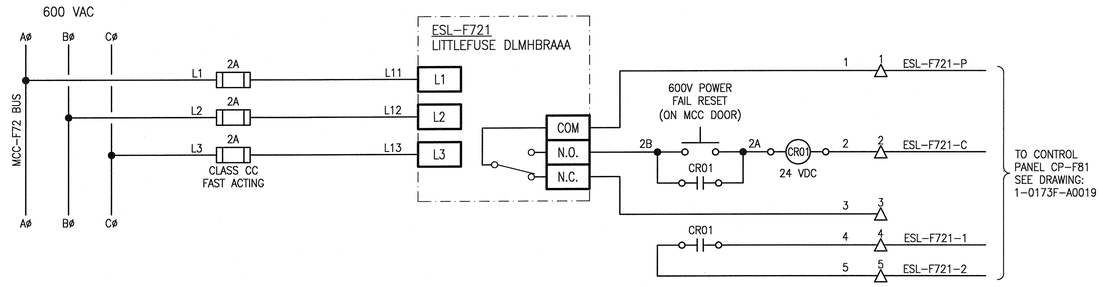

3 – ESL–F721 POWER FAILURE RELAY
SCALE: N.T.S.

LAMACOID SCHEDULE

LEGEND	LAMACOID ENGRAVING
1	READY
2	RUNNING
3	SS FAULT
4	HAND OFF AUTO
5	SS RESET
6	START
7	STOP
8	E–STOP
9	MOTOR RUN TIME
10	MOTOR CURRENT
11	OVERLOAD
12	O/L RESET
13	MAN OFF AUTO
14	SF–F66
15	EF–F67
16	INTERLOCK BYPASSED / INTERLOCK ENABLED

LEGEND:

- CT SHORTING BLOCK TERMINAL
- FEED THROUGH TERMINAL BLOCK
- BLUE PILOT LIGHT
- GREEN PILOT LIGHT
- AMBER PILOT LIGHT
- 3–POSITION SWITCH
- PUSH BUTTON
- EMERGENCY STOP BUTTON
- PUSH BUTTON
- HOUR METER
- ANALOG CURRENT METER

0.25 0 0.25 0.5m
1 : 10

GENERAL NOTES:

1. MOTOR CONTROL CENTRES ARE TO BE ARRANGED EXACTLY AS INDICATED. ARRANGE PUSH BUTTONS, HAND–OFF–AUTO, PILOT LIGHTS, EMERGENCY STOPS AND LAMACOID POSITIONS EXACTLY AS SHOWN.
2. ALL LAMACOIDS SHALL BE WHITE BACKGROUND WITH BLACK TEXT.
3. FACILITY HAS LARGE FLOOD PUMP LOADS THAT RARELY RUN. THE DIGITAL TRIP PLUG DISPLAY SHALL BE DISPLAYED AT ALL TIMES THE MCC IS ENERGIZED. SUPPLIER SHALL PROVIDE A CONTROL TRANSFORMER TO POWER BREAKER TRIP PLUG DISPLAY.

APEGM Certificate of Authorization
SNC-Lavalin Inc.
No. 4489

DRAWING NUMBER	REFERENCE DRAWINGS
1–0173F–E0006	ELECTRICAL PLAN LAYOUT MOTOR ROOM & COMMINUTOR CHAMBER AREA
1–0173F–E0005	ELECTRICAL SINGLE LINE DIAGRAM

NO.	REVISIONS	DATE	DESIGN	CHECK
00	ISSUED FOR CONSTRUCTION	2020/08/19	KS	BC

SNC·LAVALIN
SNC–LAVALIN INC.
148 Nature Park Way
Winnipeg, MB, Canada R3P 0X7
204–786–8080

DESIGNED BY: K. SAPIAK	CHECKED BY: B. CLEVEN
DRAWN BY: K. SAPIAK	APPROVED BY: B. CLEVEN
SCALE: AS SHOWN	ISSUED FOR CONSTRUCTION BY: K. ZUREK
DATE: 2020/03/17	DATE: 2020/08/19
CONSULTANT NO.:	

ENGINEER'S SEAL
PROVINCE OF MANITOBA
2020-08-19
K. K. SAPIAK
Member
33675
REGISTERED PROFESSIONAL ENGINEER
Rev.00

Winnipeg
THE CITY OF WINNIPEG
WATER AND WASTE DEPARTMENT

POLSON FLOOD PUMPING STATION
2020 UPGRADES
MCC ELEVATIONS AND DETAILS
MCC–F71 AND MCC–F72

CITY DRAWING NUMBER	SHEET	REV.	SIZE
1–0173F–E0010	001	00	A1

1–0173F–E0010–001.dwg

LAST SAVE: 2020/08/19 – 7:10am
PATH: M:\672795\4ENG\47ELE\DD – General DWG\1–0173F–E0010–001.dwg