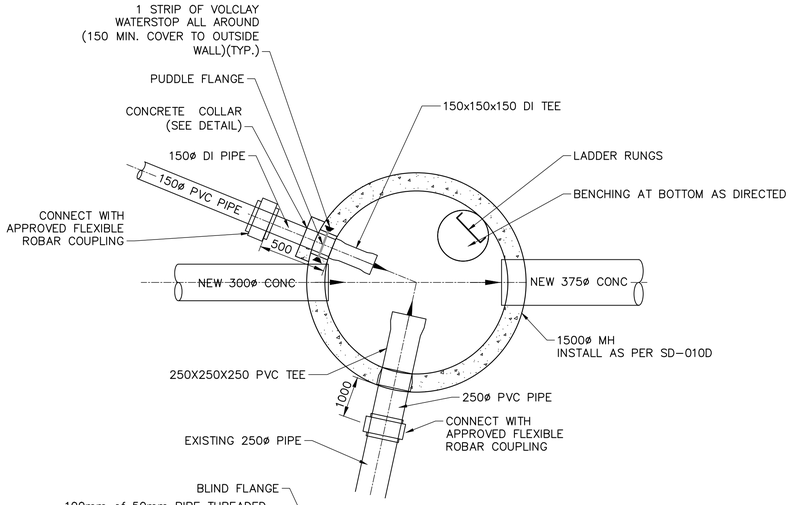

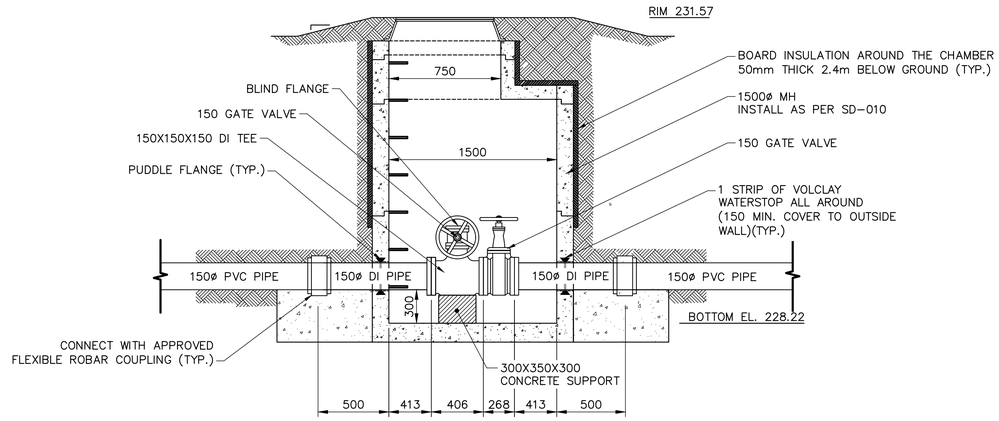

BY-PASS MANHOLE

SCALE: NTS

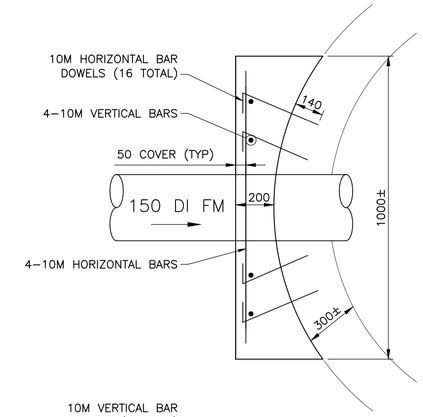

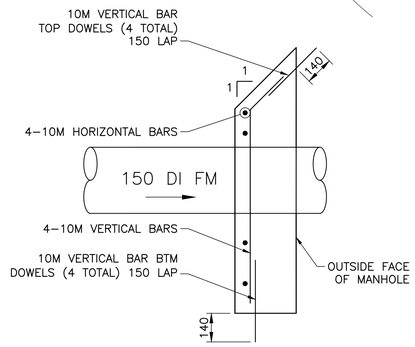

OUTER CONCRETE COLLAR DETAIL

NOT TO SCALE

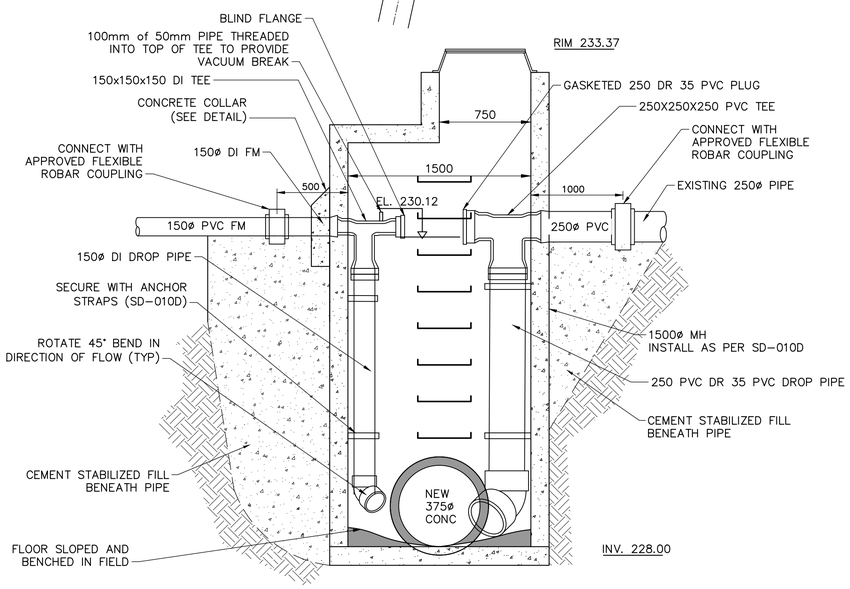

FORCEMAIN TIE-IN MANHOLE

SCALE: 1:25

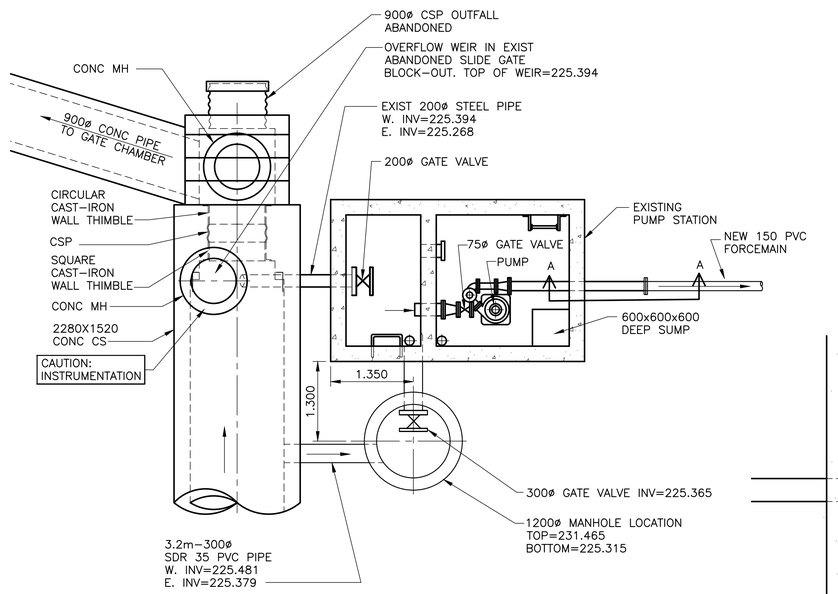

CHATAWAY LIFT STATION PLAN

SCALE: 1:50

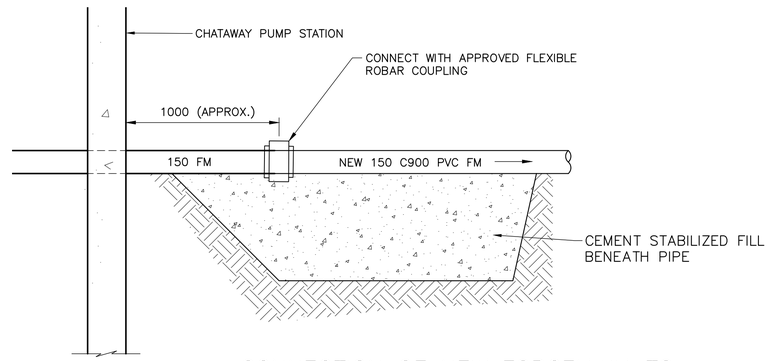

CONNECTION OF NEW FORCEMAIN TO EXISTING LIFT STATION SECTION A-A

SCALE: 1:20

FOR INDEX PAGE SEE DWG LD-XXXX

METRIC

WHOLE NUMBERS INDICATE MILLIMETRES
DECIMALIZED NUMBERS INDICATE METRES

0.0 5.0 10.0 15.0 20.0 25.0

WARNING

IF POWER EQUIPMENT OR EXPLOSIVES ARE TO BE USED FOR EXCAVATION ON THIS PROJECT THE CONTRACTOR MUST:

1) NOTIFY THE GAS COMPANY OF THE PROPOSED LOCATION OF EXCAVATION.

2) TAKE PRECAUTION TO AVOID DAMAGE TO GAS COMPANY INSTALLATIONS.

SEE PROVINCIAL REGULATION 210/72 FOR DETAILS

LOCATION APPROVED
UNDERGROUND STRUCTURES

SUPV. U/G STRUCTURES COMMITTEE — DATE

NOTE:

LOCATION OF UNDERGROUND STRUCTURES AS SHOWN ARE BASED ON THE BEST INFORMATION AVAILABLE BUT NO GUARANTEE IS GIVEN THAT ALL EXISTING UTILITIES ARE SHOWN OR THAT THE GIVEN LOCATIONS ARE EXACT. CONFIRMATION OF EXISTENCE AND EXACT LOCATION OF ALL SERVICES WAS OBTAINED FROM THE INDIVIDUAL UTILITIES BEFORE PROCEEDING WITH CONSTRUCTION.

B.M.
ELEV.

NO.	REVISIONS	DATE	BY
0	ISSUED FOR TENDER	20/10/05	RBO

KGS GROUP

DESIGNED BY	TLE	CHECKED BY	RBO
DRAWN BY	PwD	APPROVED BY	RBO
SCALE: HORIZONTAL	1:250	RELEASED FOR CONSTRUCTION	
VERTICAL	1:50		
DATE	2020 10 05	DATE	–

PLOT DATE: 2020 10 05

ENGINEER'S SEAL

CONSULTANT DRAWING NUMBER
CU-05

TENDER No.: 1173-2019
CONTRACT NUMBER: X

Winnipeg

THE CITY OF WINNIPEG
WATER AND WASTE DEPARTMENT
ENGINEERING DIVISION

WELLINGTON CRESCENT
RIVERBANK, PATH AND ROADWAY PROJECT
FORCEMAIN
DETAILS
S-MA70018599

SHEET 24 OF 69

CITY DRAWING NUMBER
12599

FILE PATH: R:\Projects\2018\18-0107-011\Dwg\Mun\
FILE NAME: 18-0107-011_CALL UG.dwg