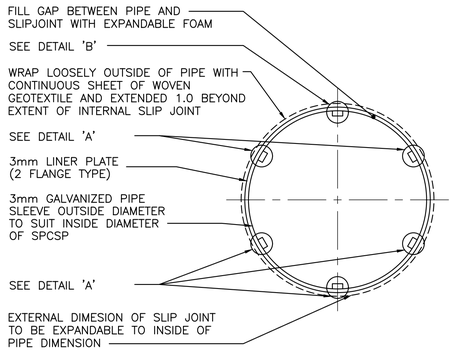

INTERNAL SLIP JOINT DETAIL
SCALE: NTS

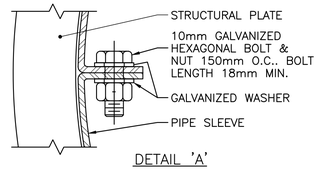

DETAIL 'A'

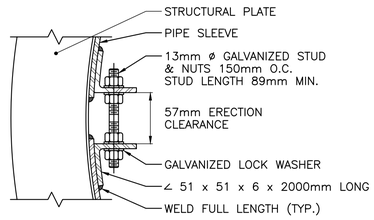

DETAIL 'B'

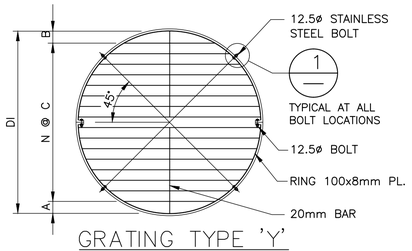

GRATING TYPE 'Y'
SCALE: NTS

OUTFALL DEBRIS GRATE											
LOCATION	PIPE		END CONDITION	GRATING							
	DIAMETER D	MATERIAL		DIAMETER D1	TYPE	BAR DIA.	A	B	C	N	WEIGHT (lbs)
PARK BOULEVARD (S-MA60041656)	2400	SPCSP	1	2385±	Y	25	145	140	150	14	355
DONCASTER STREET (S-MA70019277)	2120	SPCSP	2	2105±	Y	25	155	150	150	12	295

NOTE:
1. ALL PLATES AND BARS ARE CSA G40.21-300W.
2. ALL COMPONENTS ARE GALVANIZED.
3. ALL BOLTS ARE TYPE 316 STAINLESS STEEL CONFORMING TO ASTM A320 GRADE B8M

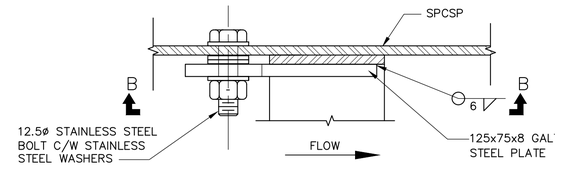

SECTION A-A
SCALE: 1:2

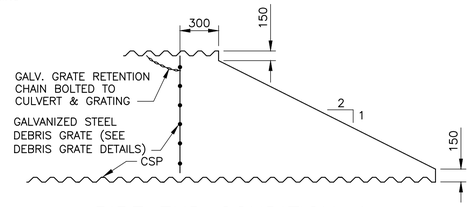

PIPE END CONDITION-1
SCALE: NTS

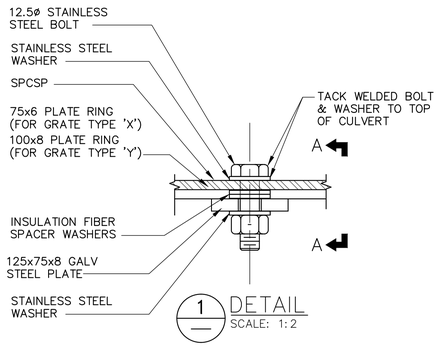

1 DETAIL
SCALE: 1:2

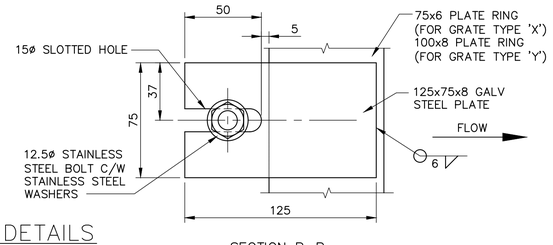

SECTION B-B
SCALE: 1:2

DEBRIS GRATE DETAILS

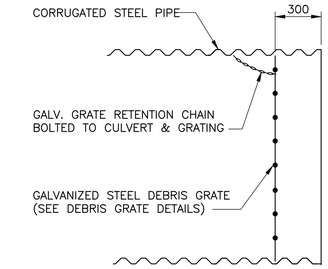

PIPE END CONDITION-2
SCALE: NTS

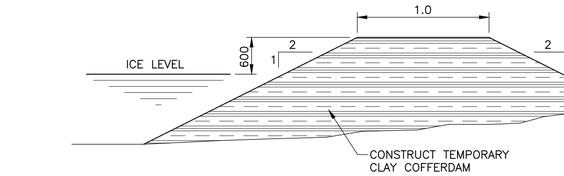

TEMPORARY COFFERDAM DETAIL
SCALE: NTS

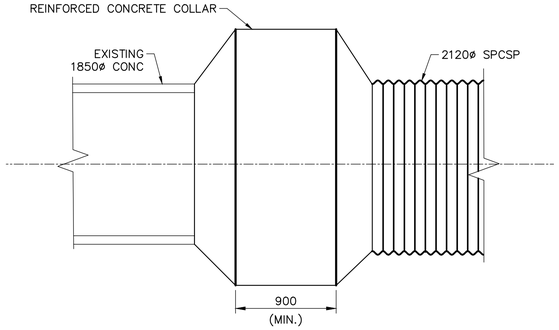

PLAN

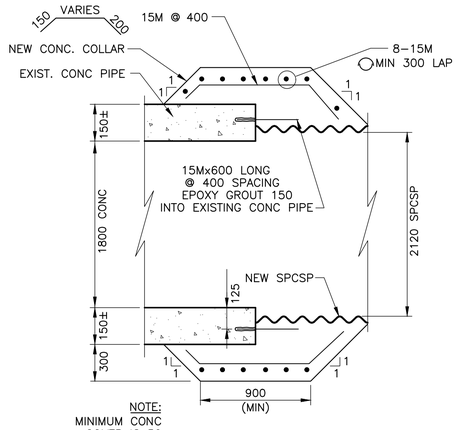

NOTE:
MINIMUM CONC COVER IS 50

SECTION

DONCASTER CONCRETE COLLAR DETAIL
SCALE: NTS

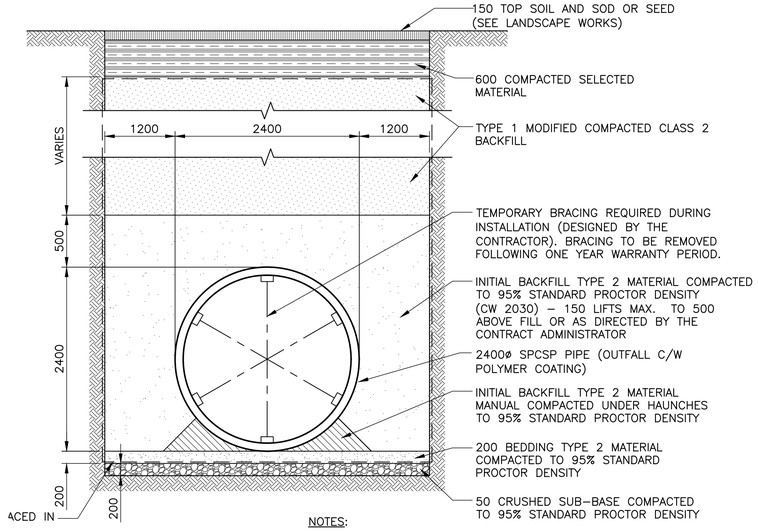

PARK BLVD. OUTFALL PIPE BEDDING DETAIL S-MA60004165
SCALE: NTS

NOTES:
1. NO STOCKPILING OF MATERIAL WITHIN 107.0 OF (A.S.R.L.). ALL EXCAVATED MATERIAL TO BE REMOVED FROM SITE.
2. THE CONTRACTOR TO PROVIDE TEMPORARY SHORING WHERE REQUIRED IN ACCORDANCE WITH SPECIFICATIONS.
3. CONTRACTOR TO SUPPLY HEATING AND HOARDING TO ACHIEVE COMPACTION OF BEDDING AND BACKFILL.

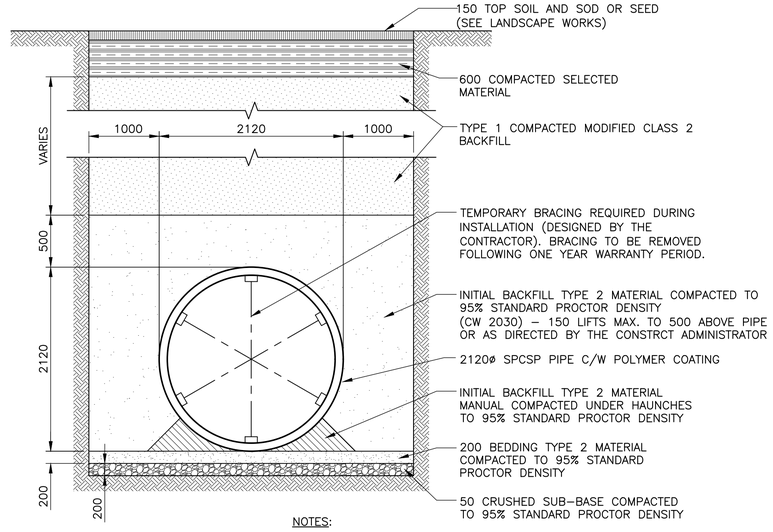

DONCASTER OUTFALL PIPE BEDDING DETAIL S-MA70019277
SCALE: NTS

NOTES:
1. NO STOCKPILING OF MATERIAL WITHIN 107.0 OF (A.S.R.L.). ALL EXCAVATED MATERIAL TO BE REMOVED FROM SITE.
2. THE CONTRACTOR TO PROVIDE TEMPORARY SHORING WHERE REQUIRED IN ACCORDANCE WITH SPECIFICATIONS.
3. CONTRACTOR TO SUPPLY HEATING AND HOARDING TO ACHIEVE COMPACTION OF BEDDING AND BACKFILL.

FOR INDEX PAGE SEE DWG LD-XXXX

SCALE: 1:50m (A1) — 0, 1.0, 2.0, 3.0, 4.0m
SCALE: 1:250m (A1) — 0, 5.0, 10.0, 15.0, 20.0m

METRIC
WHOLE NUMBERS INDICATE MILLIMETRES
DECIMALIZED NUMBERS INDICATE METRES

WARNING

IF POWER EQUIPMENT OR EXPLOSIVES ARE TO BE USED FOR EXCAVATION ON THIS PROJECT THE CONTRACTOR MUST:

1) NOTIFY THE GAS COMPANY OF THE PROPOSED LOCATION OF EXCAVATION.

2) TAKE PRECAUTION TO AVOID DAMAGE TO GAS COMPANY INSTALLATIONS.

SEE PROVINCIAL REGULATION 140/92 FOR DETAILS

LOCATION APPROVED
UNDERGROUND STRUCTURES

SUPV. U/G STRUCTURES COMMITTEE — DATE

NOTE:

LOCATION OF UNDERGROUND STRUCTURES AS SHOWN ARE BASED ON THE BEST INFORMATION AVAILABLE BUT NO GUARANTEE IS GIVEN THAT ALL EXISTING UTILITIES ARE SHOWN OR THAT THE GIVEN LOCATIONS ARE EXACT. CONFIRMATION OF EXISTENCE AND EXACT LOCATION OF ALL SERVICES WAS OBTAINED FROM THE INDIVIDUAL UTILITIES BEFORE PROCEEDING WITH CONSTRUCTION.

B.M.
ELEV.

NO.	REVISIONS	DATE	BY
0	ISSUED FOR TENDER	20/10/05	RBO

KGS GROUP

DESIGNED BY	NGV	CHECKED BY	RBO
DRAWN BY	PwD	APPROVED BY	RBO
SCALE: HORIZONTAL	1:250	RELEASED FOR CONSTRUCTION	
VERTICAL	1:50		
DATE	2020 10 05	DATE	–

PLOT DATE: 2020 10 05

ENGINEER'S SEAL

CONSULTANT DRAWING NUMBER
CU-03

TENDER No.: 1173-2019
CONTRACT NUMBER: X

FILE PATH: R:\Projects\2018\18-0107-011\Dwg\Mun\
FILE NAME: 18-0107-011_CALL UG.dwg

Winnipeg

THE CITY OF WINNIPEG
WATER AND WASTE DEPARTMENT
ENGINEERING DIVISION

WELLINGTON CRESCENT
RIVERBANK, PATH AND ROADWAY PROJECT
OUTFALLS
MISCELLANEOUS DETAILS
S-MA60004165 AND S-MA70019277

SHEET 22 OF 69

CITY DRAWING NUMBER
1-3030-C0017-001