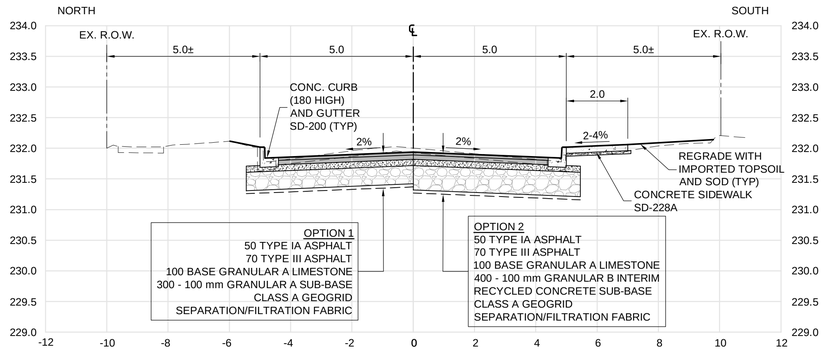

A 02 25 DOWKER AVENUE - STA. 1+275
SCALE: H=1:100, V=1:50

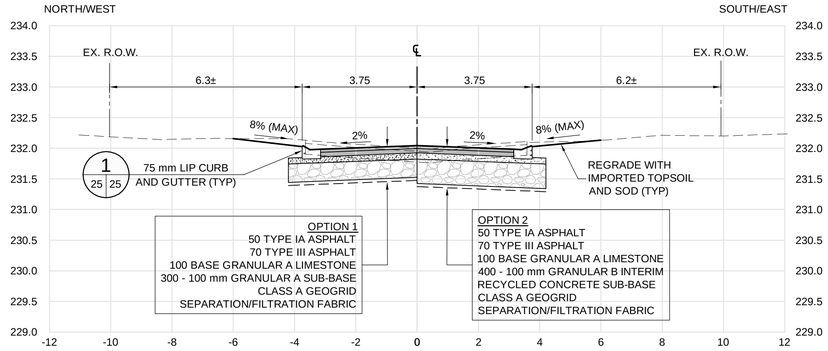

B 05 25 RILEY CRESCENT - STA. 1+175
SCALE: H=1:100, V=1:50

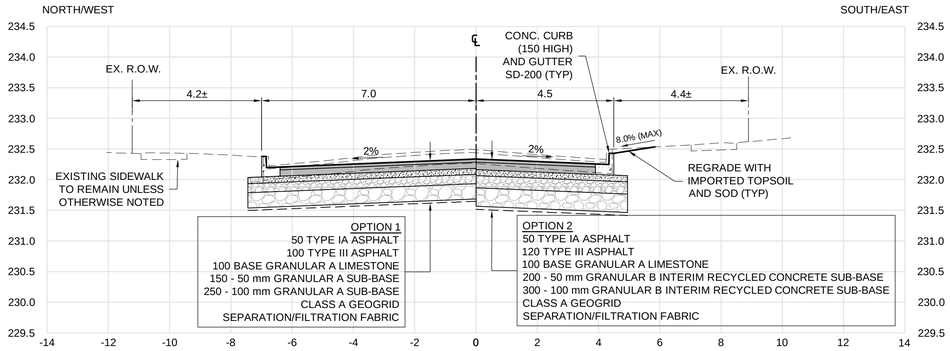

C 07 25 GROSVENOR AVENUE - STA. 1+060
SCALE: H=1:100, V=1:50

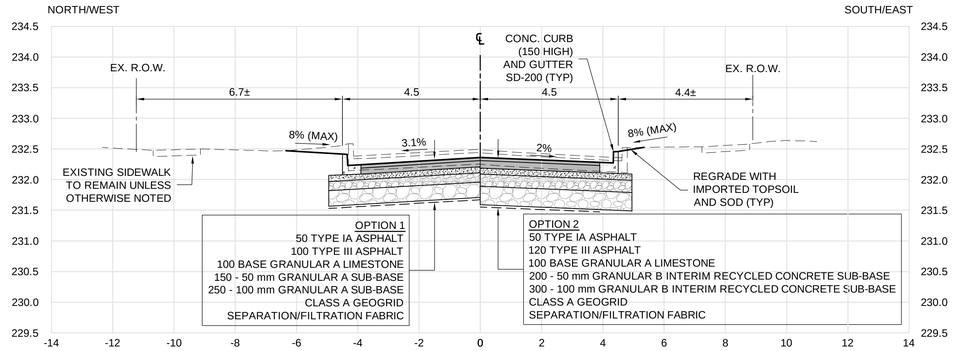

D 08 25 GROSVENOR AVENUE - STA. 1+120
SCALE: H=1:100, V=1:50

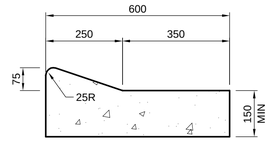

1 25 25 75 mm LIP CURB AND GUTTER
SCALE: 1:10

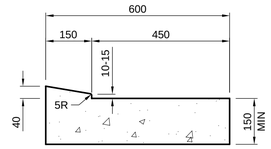

2 - - 40 mm LIP CURB AND GUTTER
SCALE: 1:10

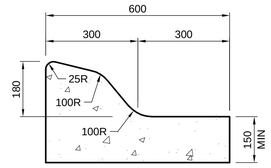

3 - - MODIFIED BARRIER CURB AND GUTTER
SCALE: 1:10

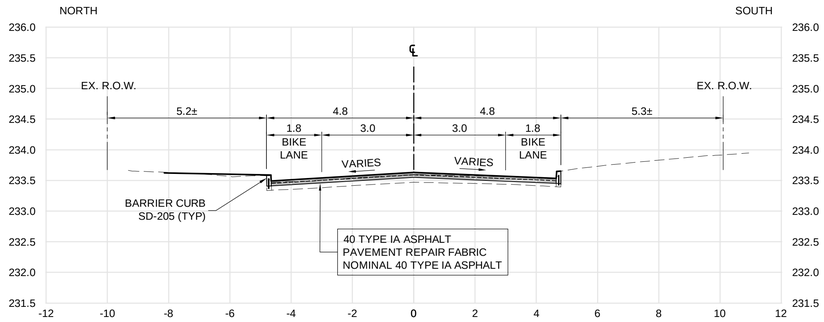

E 09 25 GROSVENOR AVENUE - STA. 1+100
SCALE: H=1:100, V=1:50

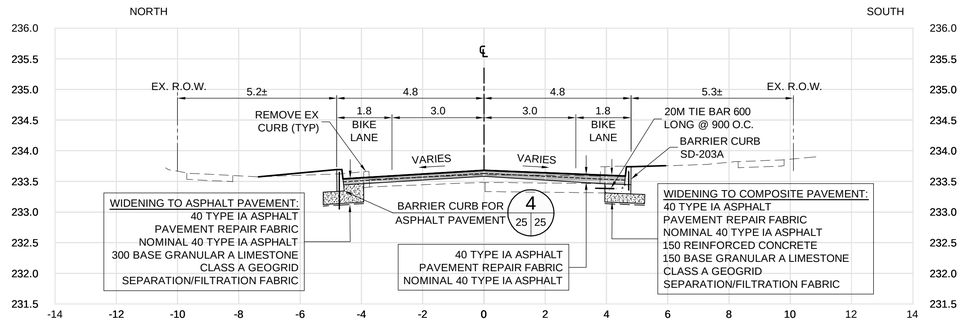

F 09 25 GROSVENOR AVENUE - STA. 1+110
SCALE: H=1:100, V=1:50

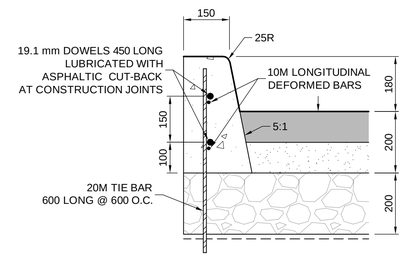

4 14,25 25 BARRIER CURB FOR ASPHALT PAVEMENT
SCALE: 1:10

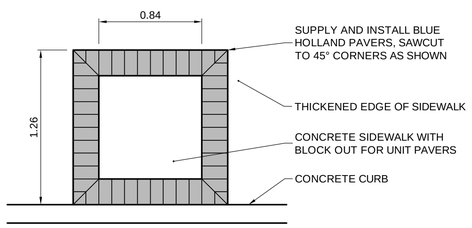

5 07 25 PAVING STONE INDICATOR SURFACE
SCALE: 1:50

PRELIMINARY ONLY
NOT FOR CONSTRUCTION

METRIC

WHOLE NUMBERS INDICATE MILLIMETRES
DECIMALIZED NUMBERS INDICATE METRES

UNDERGROUND STRUCTURES

SUPV. U/G STRUCTURES — DATE

LOCATION OF UNDERGROUND STRUCTURES AS SHOWN ARE BASED ON THE BEST INFORMATION AVAILABLE, BUT NO GUARANTEE IS GIVEN THAT ALL EXISTING UTILITIES ARE SHOWN OR THAT THE GIVEN LOCATIONS ARE EXACT. CONFIRMATION OF EXISTENCE AND EXACT LOCATION OF ALL SERVICES MUST BE OBTAINED FROM THE INDIVIDUAL UTILITIES BEFORE PROCEEDING WITH CONSTRUCTION.

B.M. ELEV.

NO.	REVISIONS	DATE	BY
0	ISSUED FOR TENDER	21/02/23	DBW

DESIGNED BY	JAT
DRAWN BY	TJH
CHECKED BY	JNC
APPROVED BY	DBW
HOR. SCALE	AS NOTED
VERTICAL	AS NOTED
DATE	

DILLON CONSULTING

RELEASED FOR CONSTRUCTION

DATE

ENGINEER'S SEAL

TENDER DRAWING

NOT TO BE USED FOR CONSTRUCTION

CONSULTANT PROJECT NUMBER
20-2958

Winnipeg

THE CITY OF WINNIPEG
PUBLIC WORKS DEPARTMENT

2021 LOCAL STREETS RENEWAL PROGRAM 21-R-05: DOWKER AVENUE, RILEY CRESCENT AND VARIOUS OTHER LOCATIONS

CITY DRAWING NUMBER

SHEET 25 OF 28

SECTIONS AND DETAILS (1 OF 2)

CONSULTANT DRAWING NUMBER

C:\pw working directory\projects 2020\40tjh\dms32250\202958-CT-CON-SECTIONS.dwg