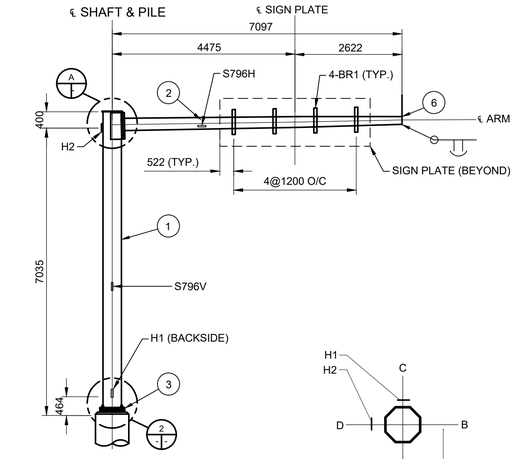

ELEVATION
1:60

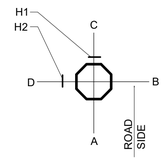

ORIENTATION
1:20

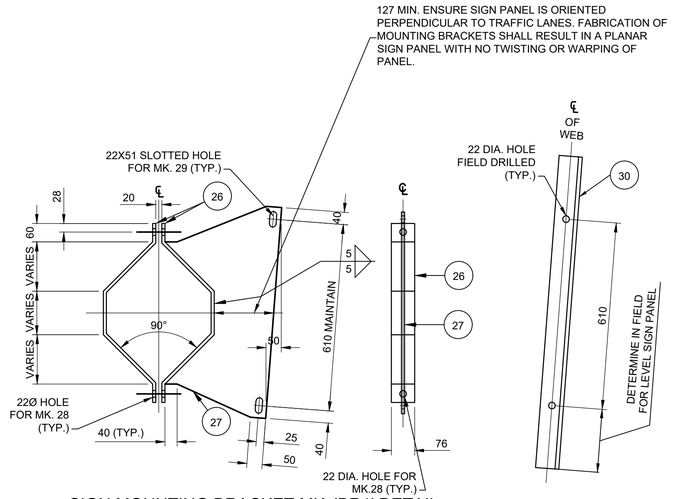

SIGN MOUNTING BRACKET MK. 'BR1' DETAIL

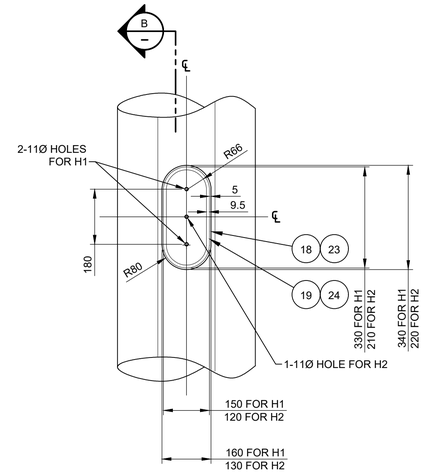

HANDHOLE ELEVATION
SCALE 1:10

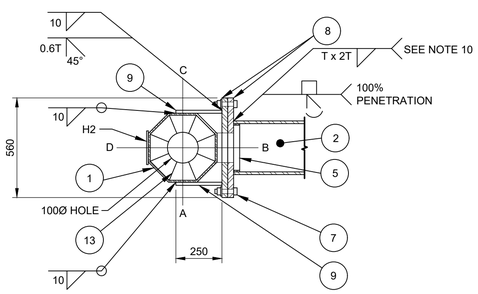

1 SECTION
SCALE 1:20

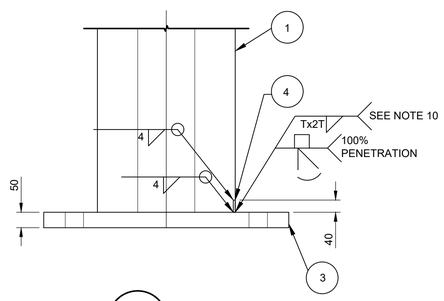

2 DETAIL
SCALE 1:10

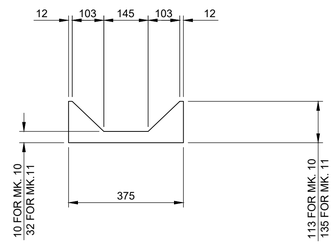

GUSSET PLATE MK. '10' & '11'

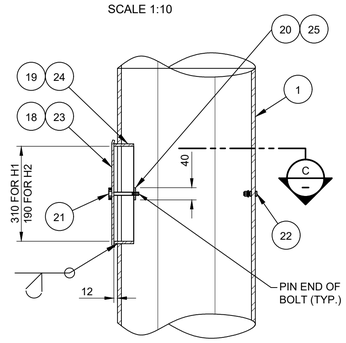

B HANDHOLE SECTION MK.'H1' & 'H2'
SCALE 1:10

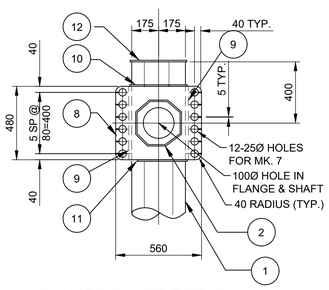

FLANGE PLATE DETAIL
1:20

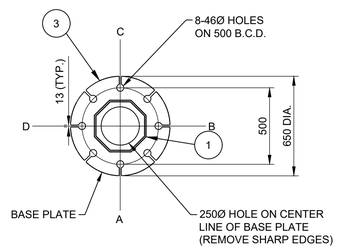

BASE PLATE DETAIL
1:20

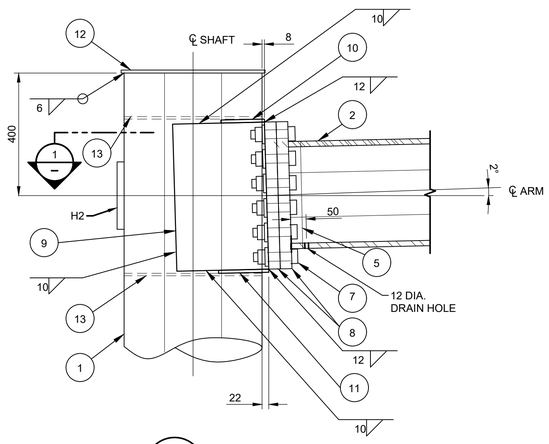

A DETAIL
SCALE 1:10

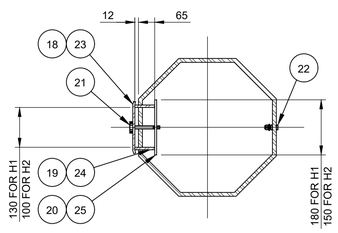

C HANDHOLE SECTION MK.'H1' & 'H2'
SCALE 1:10

BILL OF MATERIALS

MK.	QTY.	DESCRIPTION
1	1	OCTAGONAL SHAFT 350 A/F x 12.700
2	1	OCTAGONAL ARM 350 A/F TO 200 A/F x 12.700
3	1	BASE PLATE 650 DIA. x 50 THICK (GR. 300W)
4	1	BACKUP STRIP 40 x 6 (FOR SHAFT)
5	1	BACKUP STRIP 40 x 6 (FOR ARM)
6	1	END PLATE 200 A/F OCTAGONAL 6 THICK
7	12	22 DIA.x130LG. A325 BOLTS (GALV.) C/W 1-A563DH NUT & 1-F436-1 CLIPPED HARDENER WASHER
8	2	FLANGE PLATE 560 x 480 x 38 (GR. 300W)
9	2	SIDE GUSSET PLATE 20 x 640 x 250
10	1	TOP GUSSET PLATE 10 THICK
11	1	BOTTOM GUSSET PLATE 10 THICK
12	1	COVER PLATE 370 DIA x 10 THICK
13	2	OCTAGONAL INTERIOR GUSSET PLATE 8 THICK
		HANDHOLE MARK H1 (1 REQ'D.)
18	1	COVER PLATE 11 GA. x 160 x 340 (A569)
19	1	REINFORCING RING 150 x 330, R65 x 9.5 THK
* 20	2	CLAMP BAR 6 x 40 x 180
* 21	2	9.5 DIA. x 140 BOLT S/S (TYPE 316)
* 22	1	GROUND STUD ASSEMBLY 9.5 DIA. x 40
		HANDHOLE MARK H2 (1 REQ'D.)
23	1	COVER PLATE 11 GA. x 130 x 220 (A569)
24	1	REINFORCING RING 120 x 210, R65 x 9.5 THK
* 25	1	CLAMP BAR 6 x 40 x 150
* 21	1	9.5 DIA. x 140 BOLT S/S (TYPE 316)
* 22	1	GROUND STUD ASSEMBLY 9.5 DIA. x 40
		SIGN MOUNTING BRACKET BR1 (4 REQ'D.)
26	2	CLAMP BAR 10 x 76 (LENGTH TO SUIT)
27	1	BRACKET PL. 10 THICK
28	2	19 DIA. x 76 LG. ALL-THREAD ASTM F1554 GRADE 55 (GALV.) ROD
29	2	19 DIA. X 76 LG. ALL-THREAD ASTM F593 GRADE 316 HEX BOLT
30	1	ALUMINUM T-BAR 6061-T6 ASTM B221 102X76X8 LENGTH TO SUIT SIGN PANEL HEIGHT

* NOTES:
1. MARK NO. 28 C/W 2 NUTS, 2 WASHER AND 1 LOCK WASHER.
2. MARK NO. 29 C/W NUT AND LOCK WASHER.
3. MARK NO. 20 & 25 C/W DRILLED AND TAPPED AT THE CENTER OF PLATE FOR MK. 21
4. MARK NO. 21 C/W CUP WASHER.
5. MARK NO. 22 C/W 2-10Ø HEX NUT, 2 TERMINAL WASHERS, & 1 LOCK WASHER.

GENERAL NOTES

1. DESIGN DATA
   AASHTO LRFD SPECIFICATIONS FOR STRUCTURAL SUPPORTS FOR HIGHWAY SIGNS, LUMINAIRES, AND TRAFFIC SIGNALS, 1ST EDITION, 2015 WITH 2020 INTERIM REVISIONS.

   DESIGN WIND LOAD OF 1.50 kPa (31.3 PSF) IS BASED ON A BASIC WIND SPEED OF 54m/s (120MPH), AN EXPOSURE FACTOR (0.90) FOR A 7m HIGH VERTICAL ARM, A DIRECTIONAL FACTOR (0.85) FOR SUPPORTS WITH HORIZONTAL ARMS, A GUST EFFECT FACTOR OF 1.14 MIN. AND A DRAG COEFFICIENT OF 1.20 FOR OCTOGONAL MEMBERS.

   FATIGUE WIND LOADS WERE ASSESSED BASED ON CATEGORY I REQUIREMENTS FOR GALLOPING (1.0 KPA) NATURAL WIND GUSTS (0.3 KPA) AND TRUCK INDUCED GUSTS (1.1 KPA).
2. ALL PLATE MATERIALS SHALL BE CSA G40.21 - 350W STRUCTURAL STEEL UNLESS OTHERWISE NOTED.
3. ALL MATERIALS EXCEPT STAINLESS STEEL AND ALUMINUM ARE HOT-DIP GALVANIZED IN ACCORDANCE WITH ASTM A123 TO A MIN. NET RETENTION OF 610 g/m² UNLESS NOTED OTHERWISE.
4. ALL AREAS OF DAMAGED GALVANIZING SHALL BE REPAIRED WITH SELF-FLUXING LOW TEMPERATURE ZINC BASED ALLOY ROD OR SPRAY-ON COATING IN ACCORDANCE WITH PRODUCTS LISTED IN THE SPECIFICATION.
5. SIGNS
   ONE SIGN PANEL
   SIZE 4644 mm. X 2440 mm. SUPPLIED AND INSTALLED BY THE CONTRACTOR IN ACCORDANCE WITH THE SPECIFICATIONS.
6. ALL MATERIALS TO FIT AFTER GALVANIZING.
7. INSTALL HOLES IN THE GUSSET PLATES FOR DRAINAGE DURING GALVANIZING AS DETAILED
8. PROVIDE "RAISED" IDENTIFICATION NO. WITH WELDING ELECTRODE FOR THE SIGN STRUCTURE.
9. GRIND ALL SHARP POINTS AND EDGES.
10. FILLET REINFORCING WELD SHALL BE AN UNEQUAL LEG WELD WITH THE LONG LEG OF THE WELD ALONG THE HORIZONTAL ARM TERMINATING APPROXIMATELY 30° FROM THE ARM SURFACE.

NOTES:

1. PROVIDE "RAISED IDENTIFICATION NO. WITH WELDING ELECTRODE FOR THE SIGN STRUCTURE.
2. GRIND ALL SHARP POINTS AND EDGES.

TYPICAL STRUCTURE IDENTIFICATION NUMBER SIZE

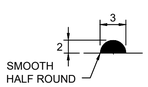

SECTION 'D'-'D'

ENGINEERS GEOSCIENTISTS MANITOBA
Certificate of Authorization
Stantec Consulting Ltd.
No. 1301

150 WM	WATERMAIN	150 WM		HYDRO				
	HYDRANT			M.T.S.				
	VALVE			CONCRETE				
300 LDS	LAND DRAINAGE SEWER	300 LDS		ASPHALT				
250 WWS	WASTE WATER SEWER	250 WWS		SIDEWALK				
	MANHOLE			MILL JOINT				
	CATCH BASIN			PROPERTY LINE				
	CURB INLET/CATCH PIT			SURVEY BAR				
	TRANSIT STOP			DITCH				
	CULVERT		(31.334)	ELEVATION	(32.231)			
	GAS			SIDEWALK RAMP				
EXISTING	LEGEND-PLAN	PROPOSED	EXISTING	LEGEND-PLAN	PROPOSED	EXISTING	LEGEND-PROFILE	PROPOSED

LOCATION APPROVED
UNDERGROUND STRUCTURES

SUPV. U/G STRUCTURES COMMITTEE — DATE

NOTE:
LOCATION OF UNDERGROUND STRUCTURES AS SHOWN ARE BASED ON THE BEST INFORMATION AVAILABLE BUT NO GUARANTEE IS GIVEN THAT ALL EXISTING UTILITIES ARE SHOWN OR THAT THE GIVEN LOCATIONS ARE EXACT. CONFIRMATION OF EXISTENCE AND EXACT LOCATION OF ALL SERVICES MUST BE OBTAINED FROM THE INDIVIDUAL UTILITIES BEFORE PROCEEDING WITH CONSTRUCTION.

B.M.
ELEV.

NO.	REVISIONS	DATE	BY
0	ISSUED FOR TENDER	22.01.06	K.W.R.

Stantec
500 - 311 Portage Avenue, Winnipeg MB Canada
www.stantec.com

DESIGNED BY	E.M.F.	CHECKED BY	H.M.V.
DRAWN BY	M.K.	APPROVED BY	H.M.V.
HOR. SCALE: VERTICAL:	AS NOTED	RELEASED FOR CONSTRUCTION:	
DATE	2019/07/16	DATE	

PROVINCE OF MANITOBA — H.M. VOGEL — 2022.01.06 — MEMBER 23744 — REGISTERED PROFESSIONAL ENGINEER

CONSULTANT DRAWING N0.
S-702

Winnipeg
THE CITY OF WINNIPEG
PUBLIC WORKS DEPARTMENT
ENGINEERING DIVISION

2019-2023 STAFFORD/TAYLOR/CORYDON
TENDER 2
STAFFORD STREET
SB STAFFORD STREET AT PEMBINA HWY
S_796 FABRICATION DETAILS

SHEET 40 OF 53
CAD FILE DRAWING NUMBER 08020s-701-932.dwg
CITY DRAWING NUMBER S 796-2022-02

U:\113708020\0300_drawings\0320_sheet_files\02_civil\Tender2\08020s-701-932.dwg
2022/01/06 1:14 PM By: Kamlenonic, Vasko