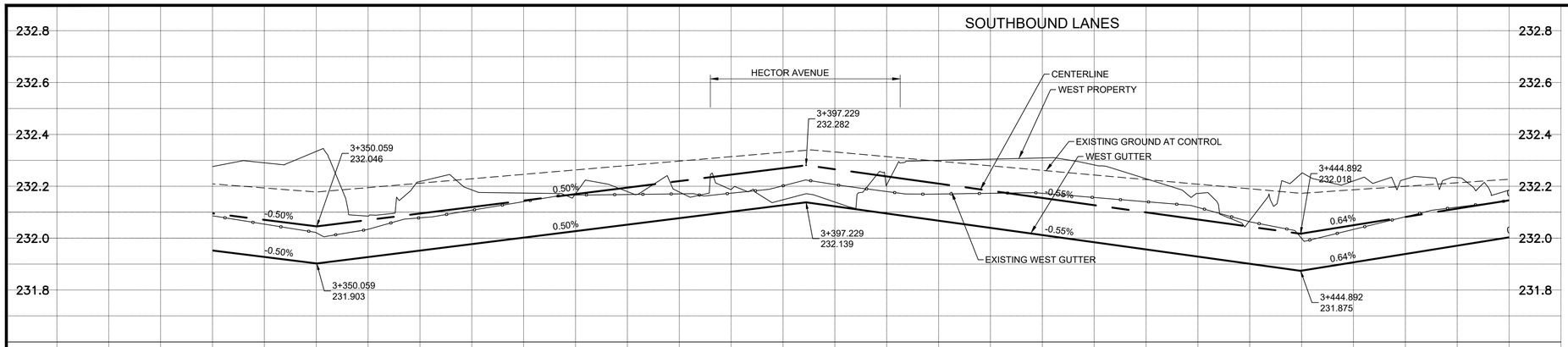


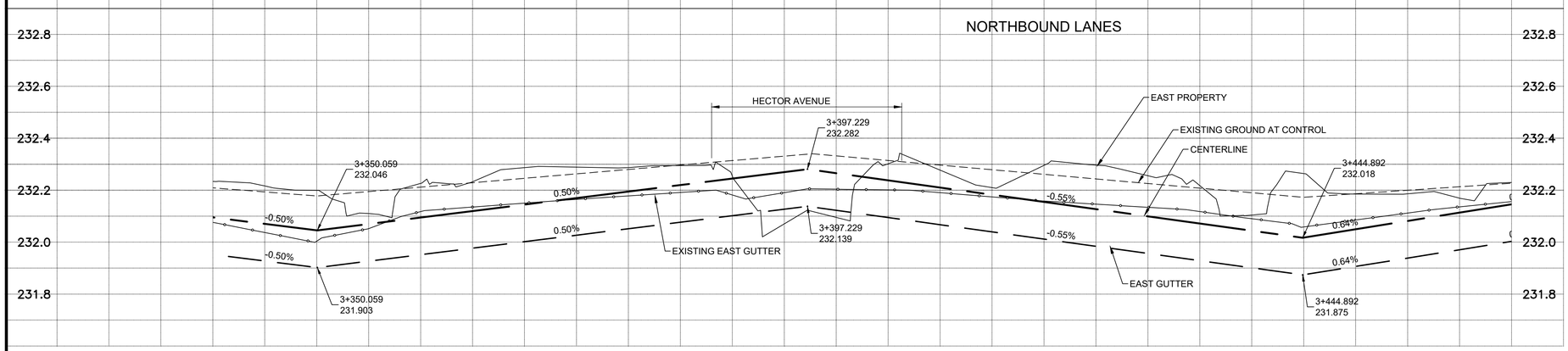


NOTES:

1. ADJUST EXISTING MANHOLES AS REQUIRED.
2. ADJUST ALL AFFECTED EXISTING WATERMAIN AND WATER SERVICE VALVES TO GRADE.
3. FOR CB LEADS AND UNDERGROUND INFO SEE SHEETS 29 TO 33.
4. INSTALL 18m OF SUBDRAIN EACH SIDE OF LOW POINTS AND HIGH SIDE OF FLYBYS AS PER SD-245 c/w CAPPED ENDS.
5. PRIVATE APPROACHES ARE 200mm REINFORCED CONCRETE WITH 100mm BASE COURSE, 225mm-50mm SUB-BASE AND NON-WOVEN GEOTEXTILE .
6. BULLNOSES, APPROACHES AND INTERSECTION RADII ARE TO BE INTEGRAL MODIFIED BARRIER CURB.
7. SEE DETAILS FOR EXCAVATION SUB-BASE PLACEMENT AND SUB-GRADE CROSS-FALL ON SHEET 28 FOR WORKING NEAR SHALLOW DUCT LINES.

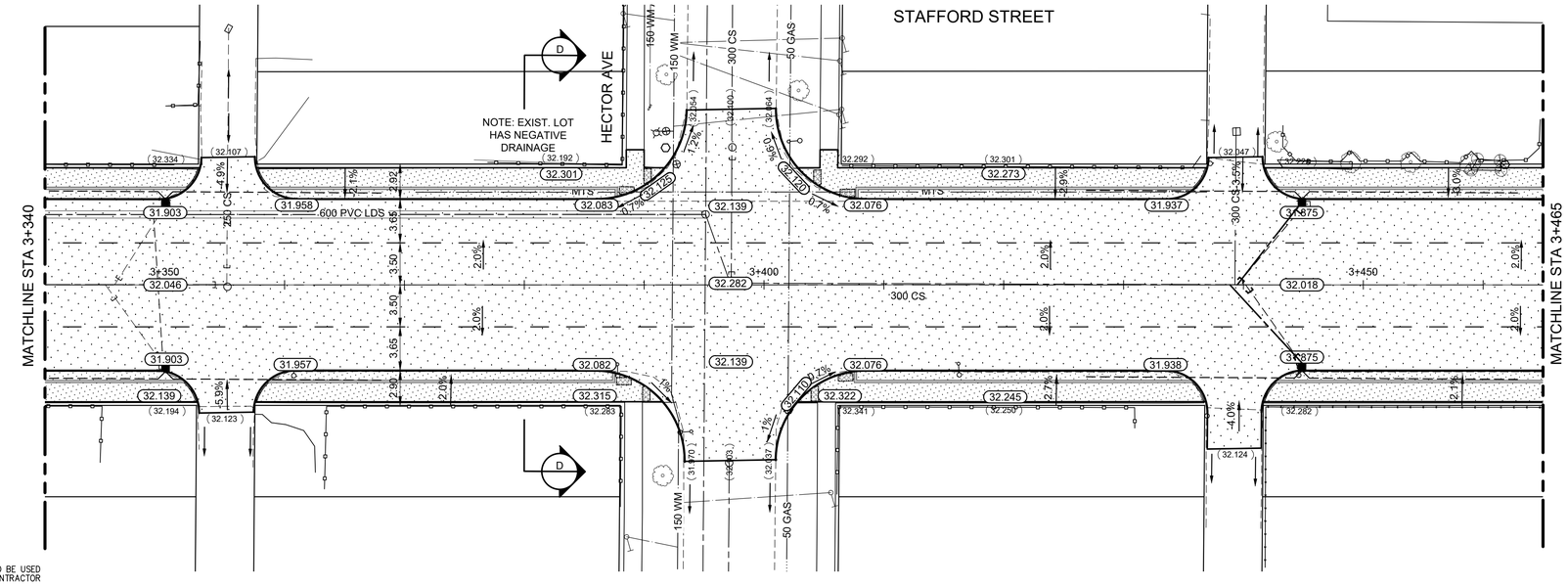


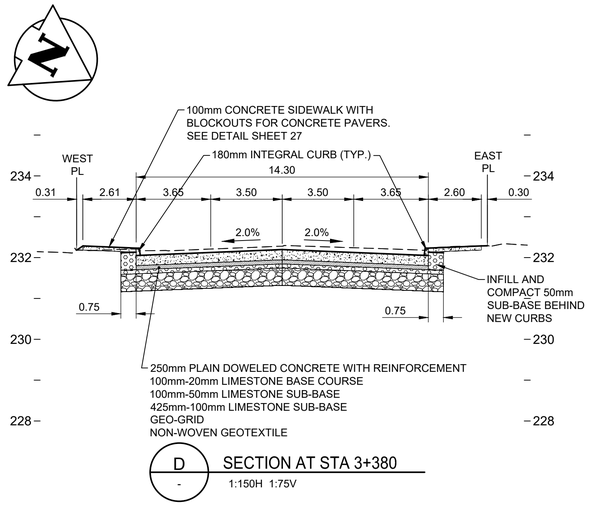


D - SECTION AT STA 3+380
1:150H 1:75V

ENGINEERS GEOSCIENTISTS MANITOBA
Certificate of Authorization
Stantec Consulting Ltd.
No. 1301

## WARNING

IF POWER EQUIPMENT OR EXPLOSIVES ARE TO BE USED FOR EXCAVATION ON THIS PROJECT THE CONTRACTOR MUST:
1) NOTIFY THE GAS COMPANY OF THE PROPOSED LOCATION OF EXCAVATION.
2) TAKE PRECAUTION TO AVOID DAMAGE TO GAS COMPANY INSTALLATIONS.
SEE PROVINCIAL REGULATION 140/92 FOR DETAILS

## METRIC

WHOLE NUMBERS INDICATE MILLIMETRES
DECIMALIZED NUMBERS INDICATE METRES

| EXISTING | LEGEND-PLAN | PROPOSED | EXISTING | LEGEND-PLAN | PROPOSED | EXISTING | LEGEND-PROFILE | PROPOSED |
|---|---|---|---|---|---|---|---|---|
| 150 WM | WATERMAIN | 150 WM | | HYDRO | | | ℄ PROFILE | |
| | HYDRANT | | | M.T.S. | | | NORTH OR WEST GUTTER | |
| | VALVE | | | CONCRETE | | | SOUTH OR EAST GUTTER | |
| 300 LDS | LAND DRAINAGE SEWER | 300 LDS | | ASPHALT | | | NORTH OR WEST PL | |
| 250 WWS | WASTE WATER SEWER | 250 WWS | | SIDEWALK | | | SOUTH OR EAST P L | |
| | MANHOLE | | | PROPERTY LINE | | | | |
| | CATCH BASIN | | | SURVEY BAR | | | | |
| | CURB INLET/CATCH PIT | | | DITCH | | | | |
| | TRANSIT STOP | | (31.334) | ELEVATION | 32.231 | | | |
| | CULVERT | | | SIDEWALK RAMP | | | | |
| | GAS | | | | | | | |

LOCATION APPROVED
UNDERGROUND STRUCTURES

SUPV. U/G STRUCTURES COMMITTEE — DATE

NOTE:
LOCATION OF UNDERGROUND STRUCTURES AS SHOWN ARE BASED ON THE BEST INFORMATION AVAILABLE BUT NO GUARANTEE IS GIVEN THAT ALL EXISTING UTILITIES ARE SHOWN OR THAT THE GIVEN LOCATIONS ARE EXACT. CONFIRMATION OF EXISTENCE AND EXACT LOCATION OF ALL SERVICES MUST BE OBTAINED FROM THE INDIVIDUAL UTILITIES BEFORE PROCEEDING WITH CONSTRUCTION.

B.M.
ELEV.

| NO. | REVISIONS | DATE | BY |
|---|---|---|---|
| 0 | ISSUED FOR TENDER | 22.01.06 | K.W.R. |

Stantec
500 - 311 Portage Avenue, Winnipeg MB Canada
www.stantec.com

| | | | |
|---|---|---|---|
| DESIGNED BY | T.G. | CHECKED BY | K.W.R. |
| DRAWN BY | M.K. | APPROVED BY | K.W.R. |
| HOR. SCALE: | 1:250 | RELEASED FOR CONSTRUCTION: | |
| VERTICAL: | 1:10 | | |
| DATE | 2021/01/25 | DATE | |

ENGINEER'S SEAL
PROVINCE OF MANITOBA
K.W. RAE
2022/01/06
REGISTERED PROFESSIONAL ENGINEER

CONSULTANT DRAWING N0.
C-223

Winnipeg
THE CITY OF WINNIPEG
PUBLIC WORKS DEPARTMENT
ENGINEERING DIVISION

2019-2023 STAFFORD/TAYLOR/CORYDON
TENDER 2
STAFFORD STREET
STA 3+340 TO STA 3+465
ROADWORKS - RECONSTRUCTION

SHEET 16 OF 53
CAD FILE DRAWING NUMBER 08020c-220-932.dwg
CITY DRAWING NUMBER P-3526-6

U:\137080\20\3000_drawing\3302_sheet_files\02_civil\Tender2\08020c-220-932.dwg
2021/12/24 4:49 PM By: Kontsevych, Tatiana