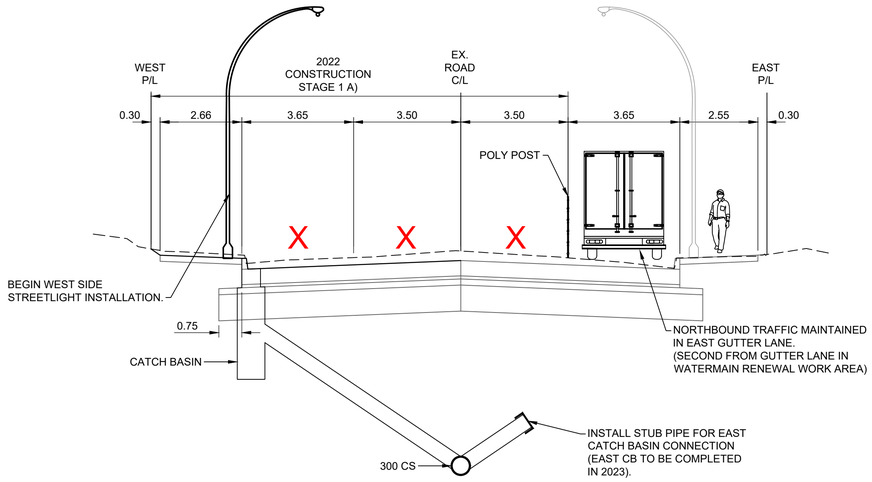

2022 CONSTRUCTION - STAGE 1 A

SCALE 1:100

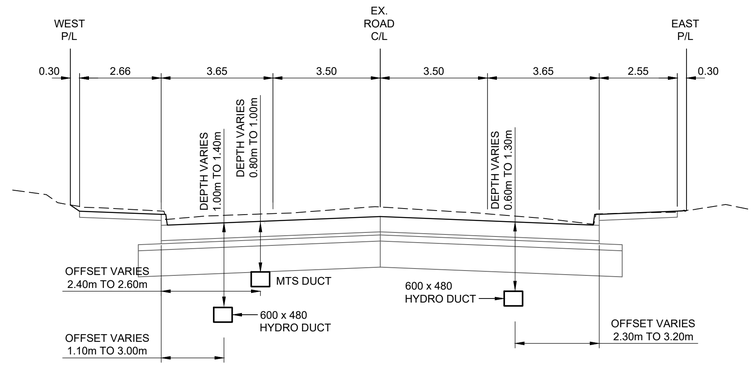

ROAD SECTION
UTILITY DUCT LOCATIONS

SCALE 1:100

NOTES

1. UTILITY DUCT DEPTHS AND OFFSETS ARE APPROXIMATE AND WILL NEED TO BE VERIFIED BY THE CONTRACTOR IN THE FIELD.

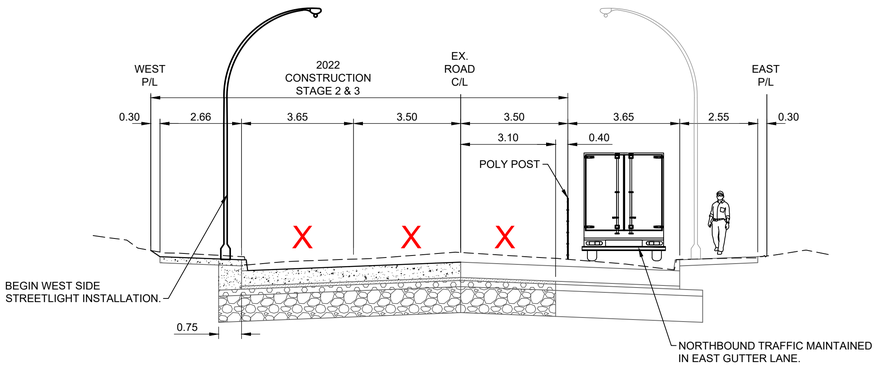

2022 CONSTRUCTION - STAGE 2 & 3
WEST ROADWORKS

SCALE 1:100

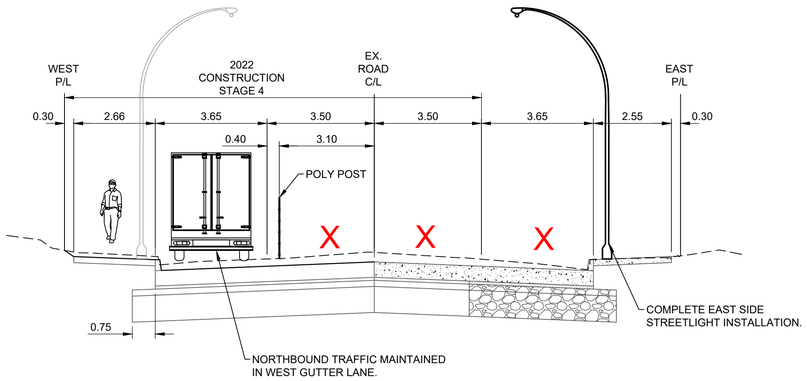

2022 CONSTRUCTION - STAGE 4
EAST ROADWORKS

SCALE 1:100

METRIC

WHOLE NUMBERS INDICATE MILLIMETRES
DECIMALIZED NUMBERS INDICATE METRES

WARNING

IF POWER EQUIPMENT OR EXPLOSIVES ARE TO BE USED FOR EXCAVATION ON THIS PROJECT THE CONTRACTOR MUST:

1) NOTIFY THE GAS COMPANY OF THE PROPOSED LOCATION OF EXCAVATION.

2) TAKE PRECAUTION TO AVOID DAMAGE TO GAS COMPANY INSTALLATIONS.

SEE PROVINCIAL REGULATION 140/92 FOR DETAILS

ENGINEERS GEOSCIENTISTS MANITOBA
Certificate of Authorization
Stantec Consulting Ltd.
No. 1301

EXISTING	LEGEND-PLAN	PROPOSED	EXISTING	LEGEND-PLAN	PROPOSED	EXISTING	LEGEND-PROFILE	PROPOSED
150 WM	WATERMAIN	150 WM		HYDRO				
	HYDRANT			M.T.S.				
	VALVE			CONCRETE				
300 LDS	LAND DRAINAGE SEWER	300 LDS		ASPHALT				
250 WWS	WASTE WATER SEWER	250 WWS		SIDEWALK				
	MANHOLE			MILL JOINT				
	CATCH BASIN			PROPERTY LINE				
	CURB INLET/CATCH PIT			SURVEY BAR				
	TRANSIT STOP			DITCH				
	CULVERT		(31.334)	ELEVATION	(32.231)			
	GAS			SIDEWALK RAMP				

LOCATION APPROVED
UNDERGROUND STRUCTURES

SUPV. U/G STRUCTURES COMMITTEE — DATE

NOTE:
LOCATION OF UNDERGROUND STRUCTURES AS SHOWN ARE BASED ON THE BEST INFORMATION AVAILABLE BUT NO GUARANTEE IS GIVEN THAT ALL EXISTING UTILITIES ARE SHOWN OR THAT THE GIVEN LOCATIONS ARE EXACT. CONFIRMATION OF EXISTENCE AND EXACT LOCATION OF ALL SERVICES MUST BE OBTAINED FROM THE INDIVIDUAL UTILITIES BEFORE PROCEEDING WITH CONSTRUCTION.

B.M.
ELEV.

NO.	REVISIONS	DATE	BY
0	ISSUED FOR TENDER	22.01.06	K.W.R.

Stantec
500 - 311 Portage Avenue, Winnipeg MB Canada
www.stantec.com

DESIGNED BY	T.G.	CHECKED BY	K.W.R.
DRAWN BY	A.M.	APPROVED BY	K.W.R.
HOR. SCALE: VERTICAL:	1:100	RELEASED FOR CONSTRUCTION:	
DATE	2021/02/16	DATE	

ENGINEER'S SEAL
PROVINCE OF MANITOBA
K.W. RAE
2022/01/06
REGISTERED PROFESSIONAL ENGINEER

CONSULTANT DRAWING N0.
C-717

Winnipeg
THE CITY OF WINNIPEG
PUBLIC WORKS DEPARTMENT
ENGINEERING DIVISION

2019-2023 STAFFORD/TAYLOR/CORYDON
TENDER 2
STAFFORD STREET
ROAD STAGING SECTIONS
2022 CONSTRUCTION - STAGES 1,2,3,& 4

SHEET 43 OF 53
CAD FILE DRAWING NUMBER 08020c-716-932.dwg
CITY DRAWING NUMBER P-3526-30

U:\113706020\3300_drawing\3320_sheet_files\02_civil\Tender2\08020c-716-932.dwg
2021/12/31 1:40 PM By: Kondesovic, Vasilic

xx / 932