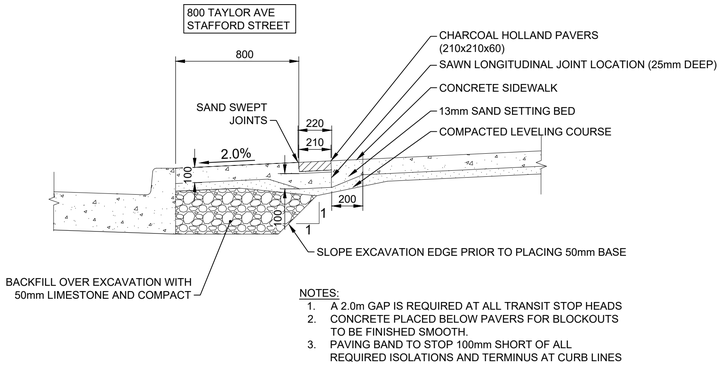

NOTES:
1. A 2.0m GAP IS REQUIRED AT ALL TRANSIT STOP HEADS
2. CONCRETE PLACED BELOW PAVERS FOR BLOCKOUTS TO BE FINISHED SMOOTH.
3. PAVING BAND TO STOP 100mm SHORT OF ALL REQUIRED ISOLATIONS AND TERMINUS AT CURB LINES

1 / - SIDEWALK PAVING BAND TAYLOR AVENUE
1:20

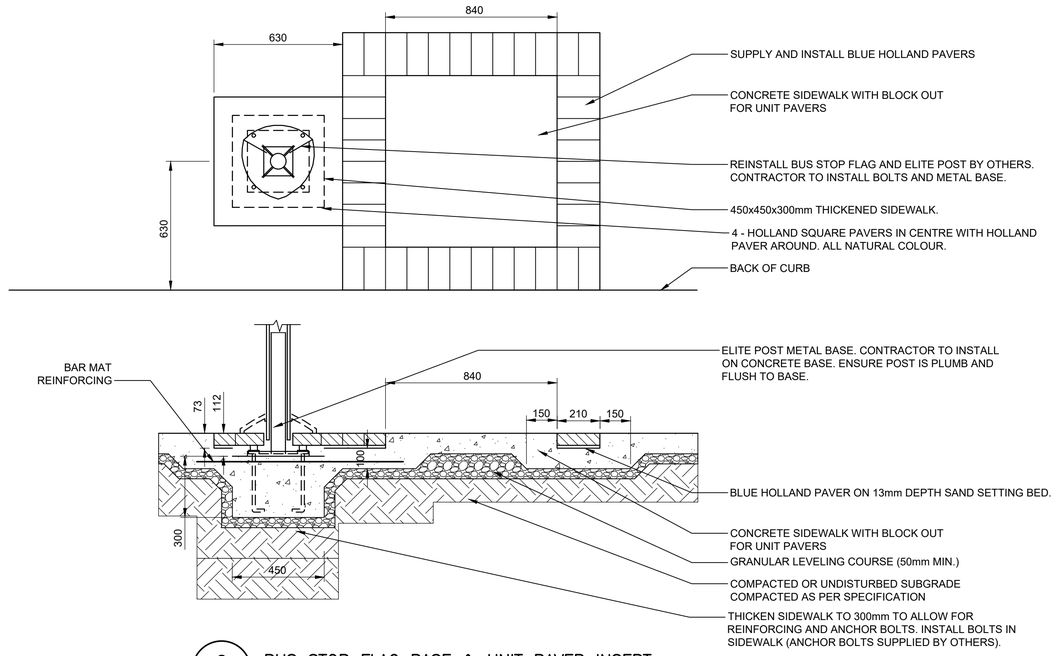

2 / – BUS STOP FLAG BASE & UNIT PAVER INSERT
1:15

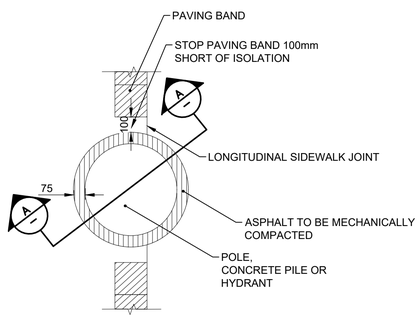

3 / - TYPICAL SIDEWALK ISOLATIONS
1:20

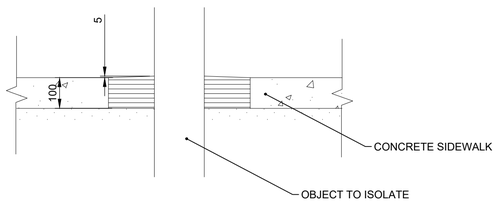

A / - SECTION
1:10

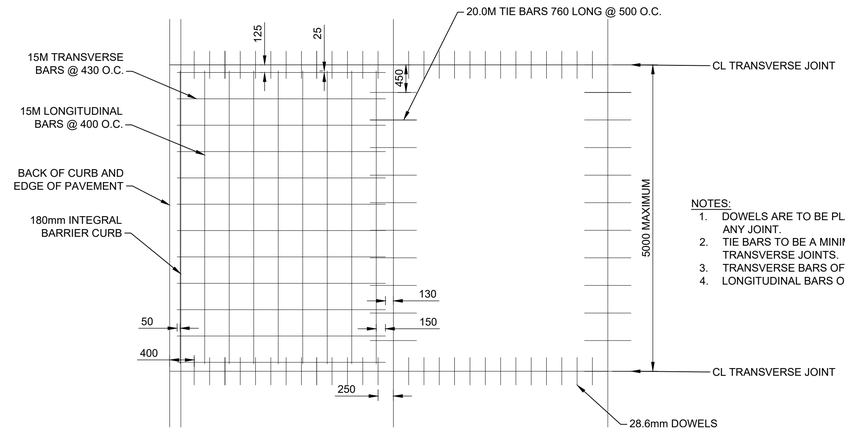

NOTES:
1. DOWELS ARE TO BE PLACED A MINIMUM OF 250mm FROM ANY JOINT.
2. TIE BARS TO BE A MINIMUM OF 450mm FROM CENTRE OF TRANSVERSE JOINTS.
3. TRANSVERSE BARS OF BAR MATS TO BE DEFORMED.
4. LONGITUDINAL BARS OF BAR MATS TO BE DEFORMED.

4 / - CORYDON AVENUE 240 THICK REINFORCED CONCRETE PAVEMENT WITH DOWELLED JOINTS
1:50

WARNING

IF POWER EQUIPMENT OR EXPLOSIVES ARE TO BE USED FOR EXCAVATION ON THIS PROJECT THE CONTRACTOR MUST:
1) NOTIFY THE GAS COMPANY OF THE PROPOSED LOCATION OF EXCAVATION.
2) TAKE PRECAUTION TO AVOID DAMAGE TO GAS COMPANY INSTALLATIONS.
SEE PROVINCIAL REGULATION 140/92 FOR DETAILS

METRIC

WHOLE NUMBERS INDICATE MILLIMETRES
DECIMALIZED NUMBERS INDICATE METRES

EXISTING	LEGEND-PLAN	PROPOSED	EXISTING	LEGEND-PLAN	PROPOSED	EXISTING	LEGEND-PROFILE	PROPOSED
150 WM	WATERMAIN	150 WM		HYDRO				
	HYDRANT			M.T.S.				
	VALVE			CONCRETE				
300 LDS	LAND DRAINAGE SEWER	300 LDS		ASPHALT				
250 WWS	WASTE WATER SEWER	250 WWS		SIDEWALK				
	MANHOLE			MILL JOINT				
	CATCH BASIN			PROPERTY LINE				
	CURB INLET/CATCH PIT			SURVEY BAR				
	TRANSIT STOP			DITCH				
	CULVERT		(31.334)	ELEVATION	32.231			
	GAS			SIDEWALK RAMP				

LOCATION APPROVED
UNDERGROUND STRUCTURES

SUPV. U/G STRUCTURES COMMITTEE — DATE

NOTE:
LOCATION OF UNDERGROUND STRUCTURES AS SHOWN ARE BASED ON THE BEST INFORMATION AVAILABLE BUT NO GUARANTEE IS GIVEN THAT ALL EXISTING UTILITIES ARE SHOWN OR THAT THE GIVEN LOCATIONS ARE EXACT. CONFIRMATION OF EXISTENCE AND EXACT LOCATION OF ALL SERVICES MUST BE OBTAINED FROM THE INDIVIDUAL UTILITIES BEFORE PROCEEDING WITH CONSTRUCTION.

B.M.
ELEV.

NO.	REVISIONS	DATE	BY
0	ISSUED FOR TENDER	22.01.06	K.W.R.

Stantec
500 - 311 Portage Avenue, Winnipeg MB Canada
www.stantec.com

DESIGNED BY	T.G.	CHECKED BY	K.W.R.
DRAWN BY	M.K.	APPROVED BY	K.W.R.
HOR. SCALE:	AS NOTED	RELEASED FOR CONSTRUCTION:	
VERTICAL:			
DATE	2021/01/25	DATE	

ENGINEER'S SEAL: PROVINCE OF MANITOBA — K.W. RAE — 2022/01/06 — REGISTERED PROFESSIONAL ENGINEER

CONSULTANT DRAWING N0.
C-504

ENGINEERS GEOSCIENTISTS MANITOBA
Certificate of Authorization
Stantec Consulting Ltd.
No. 1301

Winnipeg
THE CITY OF WINNIPEG
PUBLIC WORKS DEPARTMENT
ENGINEERING DIVISION

2019-2023 STAFFORD/TAYLOR/CORYDON
TENDER 2
MISCELLANEOUS SECTIONS & DETAILS

SHEET 27 OF 53
CAD FILE DRAWING NUMBER 08020c-504-932.dwg
CITY DRAWING NUMBER P-3526-17

U:\1137\08020\03\00. drawing\03\02_sheet files\02_civil\Tender2\08020c-504-932.dwg
2022/01/04 3:33 PM By: Korneliovic, Vasiliy