B SIZE – 279mm x 432mm

LAST SAVE: 2021/03/24 – 8:00am
PATH: \\WINPDC1\PROJ$\665338\4ENG\48IC\DD – General DWG\1-0304U-A0018-001.dwg

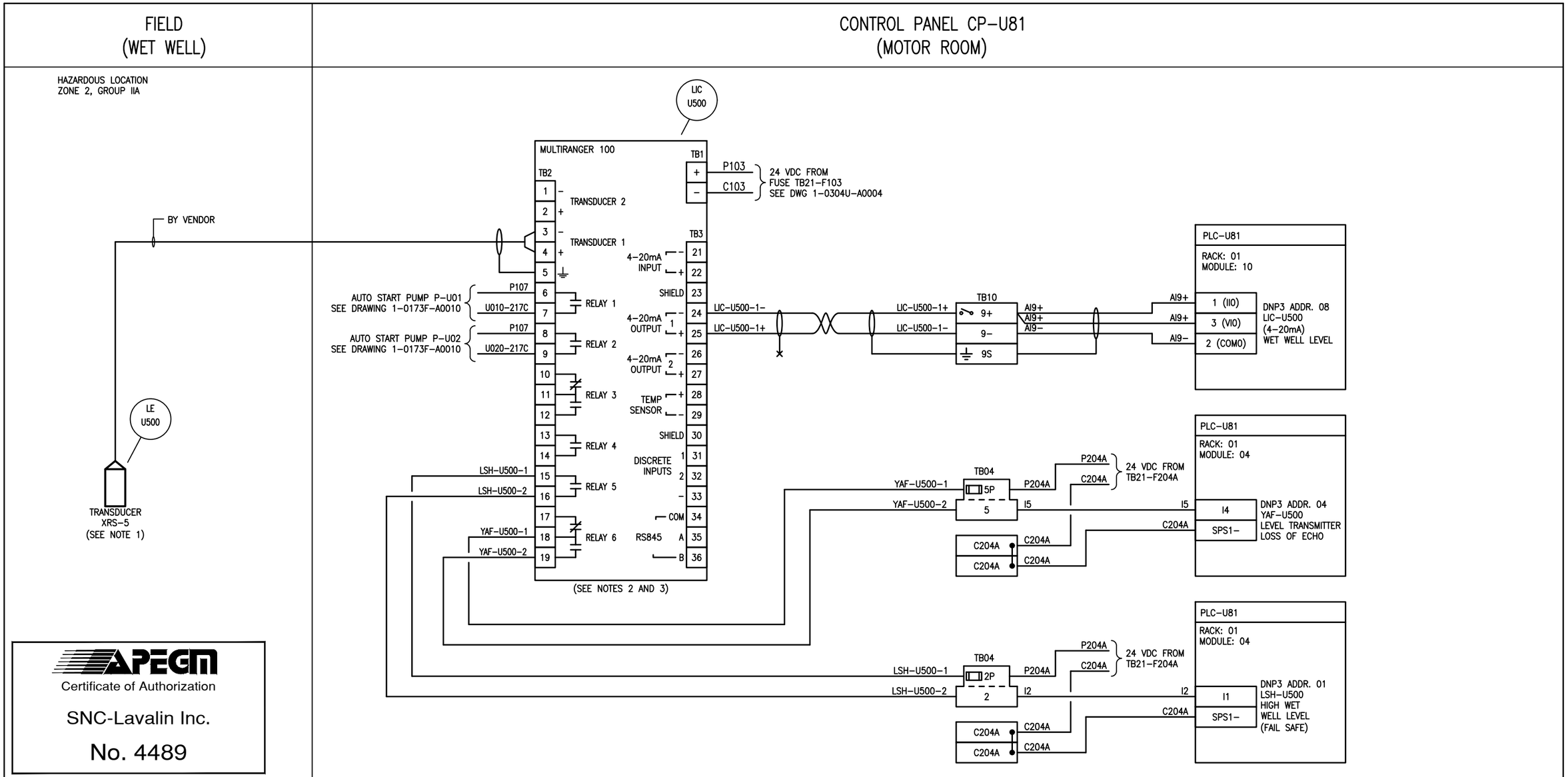

APEGM
Certificate of Authorization
SNC-Lavalin Inc.
No. 4489

NOTES:

1. TRANSDUCER HEAD ELEVATION TO BE MOUNTED AT APPROXIMATELY 7.557m (228.151m GEODETIC) ABOVE WET WELL FINISHED FLOOR LEVEL (220.594m GEODETIC).
2. LIC-U500 RELAY 1 AND RELAY 2 CONTACTS ARE USED TO AUTOMATICALLY START THE PUMPS UPON A PLC FAILURE. RELAY 1 CONTACT SHALL CLOSE AT ELEVATION 3.906m (224.500m GEODETIC). RELAY 2 CONTACT SHALL CLOSE AT ELEVATION 4.506m (225.100m GEODETIC). BOTH RELAY 1 AND RELAY 2 CONTACTS SHALL REMAIN OPEN AT ELEVATION 2.706m (223.300m GEODETIC).
3. LIC-U500 RELAY 5 IS USED TO SEND HIGH LEVEL ALARM TO THE PLC. RELAY 5 CONTACT SHALL OPEN AT ELEVATION 4.906m (225.500m GEODETIC). RELAY 5 CONTACT SHALL REMAIN CLOSED BELOW ELEVATION 4.906m (225.500m GEODETIC).

NO.	REVISIONS	DATE	DESIGN	CHECK
00	ISSUED FOR CONSTRUCTION	2021/03/24	KS	BC

SNC·LAVALIN
SNC-LAVALIN INC.
148 Nature Park Way
Winnipeg, MB, Canada R3P 0X7
204-786-8080

DESIGNED BY: K. SAPIAK	CHECKED BY: B. CLEVEN
DRAWN BY: K. SAPIAK	APPROVED BY: B. CLEVEN
SCALE: N.T.S.	DATE: 2019/08/08
ISSUED FOR CONSTRUCTION BY: K. ZUREK	DATE: 2021/03/24
CONSULTANT NO.:	

ENGINEER'S SEAL
PROVINCE OF MANITOBA
K. K. SAPIAK
Member
33675
REGISTERED PROFESSIONAL ENGINEER
2021-03-24

Winnipeg
THE CITY OF WINNIPEG
WATER AND WASTE DEPARTMENT

KEEWATIN UNDERPASS PUMPING STATION
2021 UPGRADES
LOOP DIAGRAM
WET WELL LEVEL CONTROLLER
LIC-U500, LE-U500, YAF-U500

CITY DRAWING NUMBER	SHEET	REV.	SIZE
1-0304U-A0018	001	00	B