A1 SIZE – 594mm x 841mm

ELEMENTARY DIAGRAM:

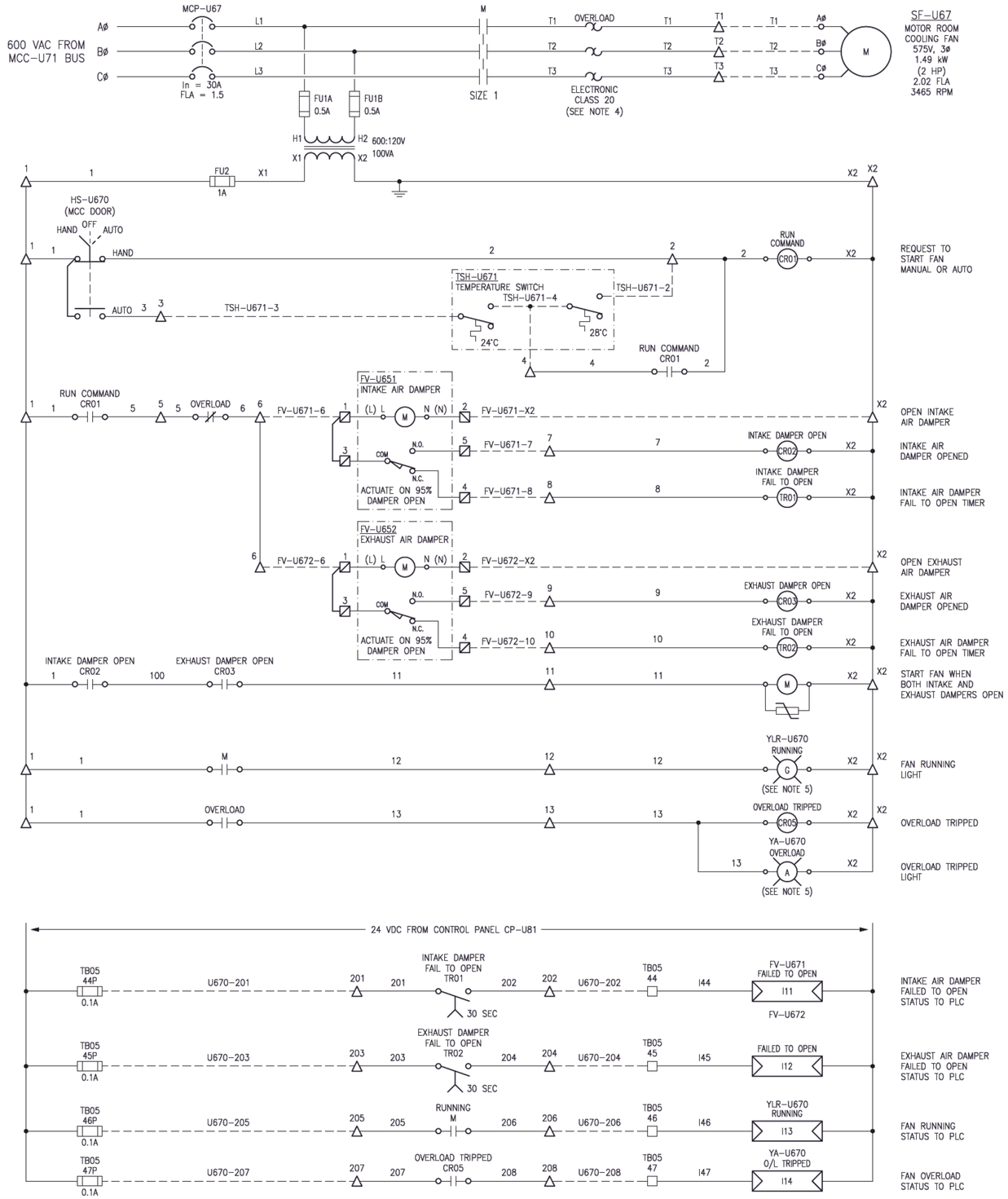

FIELD CONNECTION DIAGRAM:

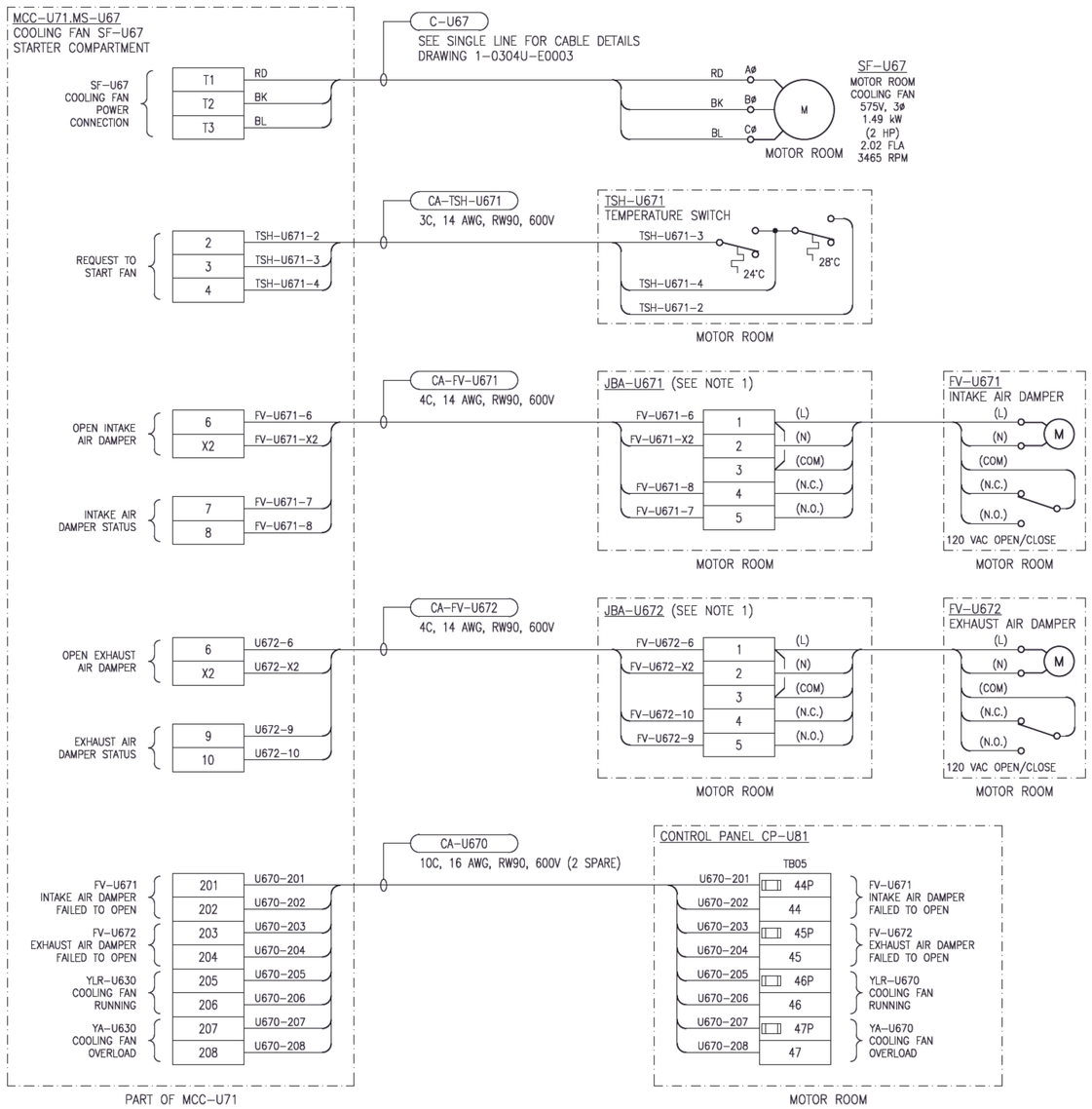

ELEMENTARY DIAGRAM LEGEND:

- INTERNAL WIRING
- FIELD (EXTERNAL) WIRING
- MCC STARTER ENCLOSURE TERMINAL
- CONTROL PANEL CP-U81 TERMINAL
- DAMPER JUNCTION BOX TERMINAL
- INDICATING LIGHT, G = GREEN, A = AMBER
- PLC INPUT

GENERAL NOTES:

1. PROVIDE AND INSTALL NEW NEMA TYPE 4 JUNCTION BOX, COMPLETE WITH TERMINALS, GROUND BAR AND IDENTIFICATION LAMACOID. JUNCTION BOX SIZE SHALL BE 6" HEIGHT X 6" WIDTH X 4" DEPTH COMPLETE WITH BACK PANEL.
2. ALL FIELD CABLING SHOWN ON THIS DRAWING IS NEW AND IS TO BE PROVIDED AND INSTALLED BY THE CONTRACTOR UNLESS OTHERWISE INDICATED. CONTRACTOR TO PROVIDE AND INSTALL CONDUIT FOR FIELD CABLING.
3. NOT ALL MCC BUCKET TERMINALS ARE SHOWN.
4. OVERLOAD SHALL BE RESET WITH A MANUAL PUSH BUTTON RESET (LOCATED ON MCC DOOR).
5. LIGHT IS MOUNTED ON MCC DOOR AND SHALL HAVE PUSH-TO-TEST FEATURE WIRED IN THAT IS NOT SHOWN ON THIS DRAWING.

APEGM Certificate of Authorization
SNC-Lavalin Inc.
No. 4489

NO.	REVISIONS	DATE	DESIGN	CHECK
00	ISSUED FOR CONSTRUCTION	2021/03/24	KS	BC

SNC·LAVALIN
SNC-LAVALIN INC.
148 Nature Park Way
Winnipeg, MB, Canada R3P 0X7
204-786-8080

DESIGNED BY: K. SAPIAK	CHECKED BY: B. CLEVEN
DRAWN BY: K. SAPIAK	APPROVED BY: B. CLEVEN
SCALE: N.T.S.	ISSUED FOR CONSTRUCTION BY: K. ZUREK
DATE: 2019/06/06	DATE: 2021/03/24
CONSULTANT NO.:	

ENGINEER'S SEAL
PROVINCE OF MANITOBA
K. K. SAPIAK
Member
33675
REGISTERED PROFESSIONAL ENGINEER
2021-03-24

THE CITY OF WINNIPEG
WATER AND WASTE DEPARTMENT

KEEWATIN UNDERPASS PUMPING STATION
2021 UPGRADES
MOTOR STARTER SCHEMATIC
MOTOR ROOM COOLING FAN
SF-U67

CITY DRAWING NUMBER	SHEET	REV.	SIZE
1-0304U-E0015	001	00	A1

DRAWING NUMBER	REFERENCE DRAWINGS
1-0304U-E0003	ELECTRICAL SINGLE LINE DIAGRAM

LAST SAVE: 2021/03/24 – 7:36am
PATH: \\WINPDC1\PROJ$\66538\4ENG\47ELE\DD – General DWG\1-0304U-E0015-001.dwg

1-0304U-E0015-001.dwg