GENERAL NOTES:

1. ALL WORK SHALL CONFORM TO THE LATEST MANITOBA BUILDING CODE AND THE ASSOCIATING NATIONAL BUILDING CODE. ALL REFERENCES TO CODES, STANDARDS, SPECIFICATIONS, GUIDELINES, ETC. SHALL MEAN THE LATEST EDITION APPLICABLE.
2. ALL WORK TO BE CARRIED OUT IN ACCORDANCE WITH THE OCCUPATIONAL HEALTH AND SAFETY ACT OF MANITOBA.
3. THE CONTRACTOR SHALL BE PRESENT AT SITE REVIEW MEETINGS.
4. THE CONTRACTOR SHALL REINSTATE LANDSCAPE AND PROVIDE POSITIVE SLOPE AT A MINIMUM OF 1% AWAY FROM THE BUILDING.
5. THE CONTRACTOR SHALL COORDINATE WITH MCHP TO ENSURE THE CONSTRUCTION HAS MINIMAL DISRUPTION TO THE OPERATION OF MCHP.
6. THE CONTRACTOR SHALL BE RESPONSIBLE FOR SITE PREPARATION AS PER DRAWINGS.
7. THE CONTRACTOR SHALL BE RESPONSIBLE FOR APPLYING AND SECURING ALL NECESSARY PERMITS.
8. THE CONTRACTOR SHALL OBTAIN APPROVAL/ACCEPTANCE FROM AUTHORITIES HAVING JURISDICTION.
9. THE CONTRACTOR MUST VERIFY EXISTING CONDITIONS PRIOR TO COMMENCEMENT OF WORK.
10. THE CONTRACTOR MUST SAFEGUARD AND PROTECT ALL EXISTING UTILITIES DURING THE CONSTRUCTION. ANY DAMAGE TO EXISTING STRUCTURES AND UTILITIES BY THE CONTRACTORS OPERATIONS MUST BE REPAIRED BY THE CONTRACTOR AT HIS OWN COST.
11. THE CONTRACTOR SHALL BE RESPONSIBLE FOR THE SITE SECURITY.
12. THE CONTRACTOR SHALL ENSURE THE QUALITY OF WORK IS TO THE SATISFACTION OF THE FACILITY MANAGER AND/OR CONSULTANT.
13. THE CONTRACTOR SHALL COORDINATE WORK WITH OTHERS.
14. HOARDING, TEMPORARY SUPPORT AND BRACING FOR CONSTRUCTION IS THE RESPONSIBILITY OF THE CONTRACTOR.
15. THE CONTRACTOR SHALL CONFIRM THE LOCATIONS OF EXISTING DUCT/PIPE/CABLE PRIOR TO FABRICATING.
16. DO NOT CONSTRUCT FROM THIS DRAWING UNLESS MARKED "ISSUED FOR CONSTRUCTION".
17. THESE DRAWINGS TO BE READ IN CONJUNCTION WITH THE CONTRACT SPECIFICATIONS, CIVIL DRAWINGS, ARCHITECTURAL DRAWINGS, MECHANICAL DRAWINGS, AND ELECTRICAL DRAWINGS.
18. ALL DIMENSIONS, DETAILS, ELEVATIONS AND CONDITION INDICATED ARE DERIVED FROM AVAILABLE DRAWINGS AND SHALL BE VERIFIED BY THE CONTRACTOR PRIOR TO COMMENCING WITH CONSTRUCTION WORK. ANY DISCREPANCY OR CONFLICT SHALL BE REPORTED TO THE ENGINEER OF RECORD.
19. NO ALTERATIONS TO STRUCTURAL DETAILS SHALL BE MADE WITHOUT THE WRITTEN PERMISSION OF THE STRUCTURAL ENGINEER.
20. DO NOT SCALE FROM DRAWINGS.
21. CHECK AND VERIFY ALL DIMENSIONS AND ELEVATIONS ON SITE PRIOR TO COMMENCING WITH CONSTRUCTION WORKS.
22. ALL DIMENSIONS, DETAILS, ELEVATIONS AND CONDITION INDICATED ARE DERIVED FROM AVAILABLE DRAWINGS AND SHALL BE VERIFIED BY THE CONTRACTOR PRIOR TO COMMENCING WITH CONSTRUCTION WORK. ANY DISCREPANCY OR CONFLICT SHALL BE REPORTED TO THE ENGINEER OF RECORD.

DEMOLITION AND EXCAVATION:

1. EXISTING CONCRETE STAIR SHALL BE DISPOSED OFF SITE.
2. EXISTING HANDRAILS SHALL BE RECYCLED AT RECYCLING FACILITY.
3. EXISTING ASPHALT SURFACE EXCAVATED SHALL BE DISPOSED OFF SITE.
4. EXCAVATION IN THE ASPHALTIC AREA SHALL BE BACK FILLED WITH COMPACTED GRANULAR TO A MINIMUM OF 98% SPDD.
5. THE CONTRACTOR SHALL VERIFY EXISTING UNDERGROUND UTILITIES PRIOR TO EXCAVATION.
6. THE CONTRACTOR SHALL VERIFY AND MARK ALL EXISTING UNDERGROUND LINES AND ENSURE THAT THE WORK DOES NOT INTERFERE OR DAMAGE ANY UNDERGROUND LINES.
7. THE CONTRACTOR SHALL NOTIFY THE ENGINEER OF RECORD OF EXISTING UTILITIES INTERFERING WITH THE EXCAVATION OR WORK.
8. THE CONTRACTOR SHALL BE RESPONSIBLE FOR ENSURING THE SOIL PROPERTIES AS PER DRAWINGS.
9. ALL EXCAVATION SHALL BE COMPLETELY DEWATERED DURING CONSTRUCTION. KEEP EXCAVATION DEWATERED TO AT LEAST 300MM BELOW LOWEST ELEVATION OF EXCAVATION.
10. CONTINUOUSLY PROTECT THE BOTTOM OF THE EXCAVATION AND ALL FOUNDATION ON THE GROUND FROM DAMAGE DUE TO FROST AND GROUND WATER PRESSURE.

DESIGN LOADS

CLIMATIC DATA: CITY OF WINNIPEG
IMPORTANCE FACTOR: HIGH

WIND LOAD
REFERENCE HOURLY WIND PRESSURE (1/10) 0.35 kPa
REFERENCE HOURLY WIND PRESSURE (1/50) 0.45 kPa

SNOW LOAD

S/s	1.9 kPa
S/r	0.2 kPa

SEISMIC DATA

S/a (0.2)	0.054
S/a (0.5)	0.032
S/a (1.0)	0.016
S/a (2.0)	0.0066
S/a (5.0)	0.0013
S/a (10.0)	0.0007
PGA	0.032
PGV	0.021

DEAD LOAD
STAIR OWN WEIGHT

LIVE LOAD
EQUIPMENT AREA - PUMP ROOM 3.6 kPa

SOIL PROPERTIES
COEFFICIENT OF INTERNAL FRICTION 30 DEGREES
NET BEARING CAPACITY ULS 75 kPa
NET BEARING CAPACITY SLS 50 kPa

CONCRETE FOUNDATION:

1. ALL SUBGRADE TO BE INSPECTED BY AN ENGINEER PRIOR TO PLACING CONCRETE.
2. FOUNDATION IS DESIGNED TO WITHSTAND A METAL STAIR AS PER DRAWINGS.
3. CONCRETE MATERIALS, REINFORCING, AND CAST-IN-PLACE CONCRETE AND WORK RELATING TO SHALL CONFORM TO THE LATEST CODES AND STANDARDS BEING NORMAL WEIGHT MEETING THE FOLLOWING REQUIREMENTS.
4. PERFORM CONCRETE FORMS IN ACCORDANCE WITH THE MOST UPDATED CSA A23.1AND TESTING TO CSA A23.2.
5. CONCRETE FALSE WORK/FORMWORKS SHALL CONFORM TO THE LATEST EDITION OF CSA A269.1.
6. REINFORING STEEL TO THE LATEST EDITION OF CSA G30 GRADE 400.
7. ALL CONCRETE SHALL BE NORMAL WEIGHT CONCRETE.
8. ADMIXTURES CONTAINING CALCIUM CHLORIDE ARE NOT ALLOWED.
9. MINIMUM COMPRESSIVE STRENGTH OF CONCRETE AT 28 DAYS TO BE 35 MPa FOR STRUCTURAL CONCRETE.
10. CONCRETE STRENGTH AND MIX SPECIFICATIONS ARE AS FOLLOWED, UNLESS NOTED OTHERWISE:
    - a. EXPOSURE CLASS C-1
    - b. MAXIMUM W/C 0.40
    - c. AIR CONTENT 5-8%
    - d. CURING TYPE 2
    - e. DENSITY 30 kg/m^3
    - f. SPECIFIC STRENGTH 35 MPa AT 28 DAYS
    - g. CEMENT TYPE GU
    - h. SLUMP 75mm ± 20mm
    - i. MAXIMUM AGG. SIZE 20mm
    - j. MINIMUM COVER 75mm
11. MINIMUM SPLICE FOR 15M - 750 mm; 10M - 500 mm
12. FINISH CONCRETE IN ACCORDANCE WITH CAN/CSA-A23.1
13. REJECT ALL CONCRETE IF BATCHING TIME AND PLACING TIME EXCEEDS TWO HOURS.
14. CONTRACTOR SHALL PREPARE AND SUBMIT CONCRETE MIX DESIGN SHOP DRAWINGS FOR REVIEW 14 DAYS PRIOR TO COMMENCING RELATED WORK.
15. PROVIDE CERTIFICATION FOR PLANT, EQUIPMENT, AND MATERIAL TO BE USED IN CONCRETE COMPLY WITH REQUIREMENTS OF CAN/CSA-123.1

STRUCTURAL STEEL

1. ALL WORK MUST COMPLY IN ALL RESPECTS WITH MOST UPDATED VERSIONS OF CSA S16 AND THE NBCC.
2. STRUCTURAL STEEL TO CONFORM TO MOST UPDATED CSA G40.20/G40 GRADE 350W FOR ROLLED STEEL AND GRADE 300W FOR STEEL PLATE.
3. EXTERIOR STRUCTURAL STEEL AND PLATES TO BE HOT-DIPPED-GALVANIZED IN ACCORDANCE WITH LATEST VERSION OF ASTM A123 AND CSA G164.
4. CHECKER PLATES AND BAR CRATING ARE HOT-DIPPED-GALVANIZED IN ACCORDANCE WITH LATEST VERSION OF ASTM A123 AND CSA G164.
5. CONNECTIONS TO BE DESIGNED IN ACCORDANCE TO THE LATEST CODES AND STANDARDS.
6. ALL BOLT AND ANCHORS ASSEMBLIES MUST MEET THE REQUIREMENTS OF ASTM F3125 GRADE A325.
7. BOLTS ARE HOT-DIPPED-GALVANIZED IN ACCORDANCE WITH LATEST VERSION OF ASTM A123 AND CSA G164.
8. ALL WELDING TO BE PERFORMED IN ACCORDANCE WITH THE LATEST VERSION OF CSA W59 BY COMPANIES CERTIFIED TO CSA W47.1.
9. ALL WELDED CONNECTIONS MUST HAVE A MINIMUM WELD LEG SIDE OF 5 mm.
10. WELD ALL COLUMNS ALL AROUND TO BASE PLATES WITH MINIMUM WELD THICKNESS OF 5mm, UNLESS OTHERWISE MENTIONED.
11. ALL FIELD WELDS, SCRATCHES FROM ERECTION SHALL BE CLEANED, SPRAYED OR BRUSH PAINTED WITH ZINGA OR AN APPROVED PRODUCT.
12. SUBMIT SHOP DRAWINGS, SEALED BY A PROFESSIONAL ENGINEER REGISTERED IN THE PROVINCE OF MANITOBA, FOR REVIEW PRIOR TO FABRICATION.

ALUMINUM HANDRAIL

1. REMOVABLE HANDRAILS ARE BUILT WITH 38mm O.D. SCHEDULE 40 PIPES; UNLESS OTHERWISE MENTIONED.
2. ALL CONNECTIONS ARE FILLET WELDED IN ACCORDANCE TO THE LATEST VERSION OF CSA W59.2 BY COMPANIES CERTIFIED TO CSA W47.2.
3. NO WELD IN ALUMINUM HANDRAILS IS ALLOWED IN SITE.

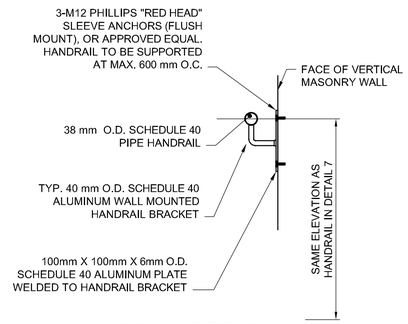

HANDRAIL DETAIL
1:10
TYPICAL WALL MOUNT

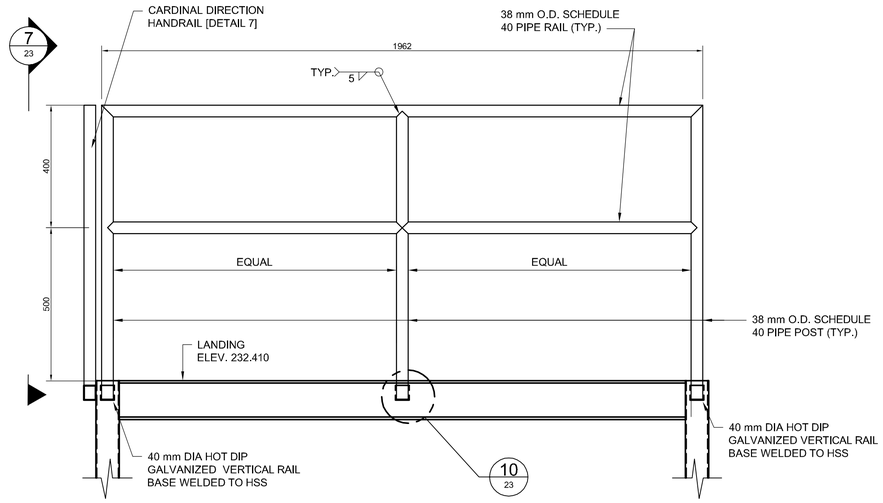

8/24 REMOVABLE HANDRAIL SIDEVIEW
1:10

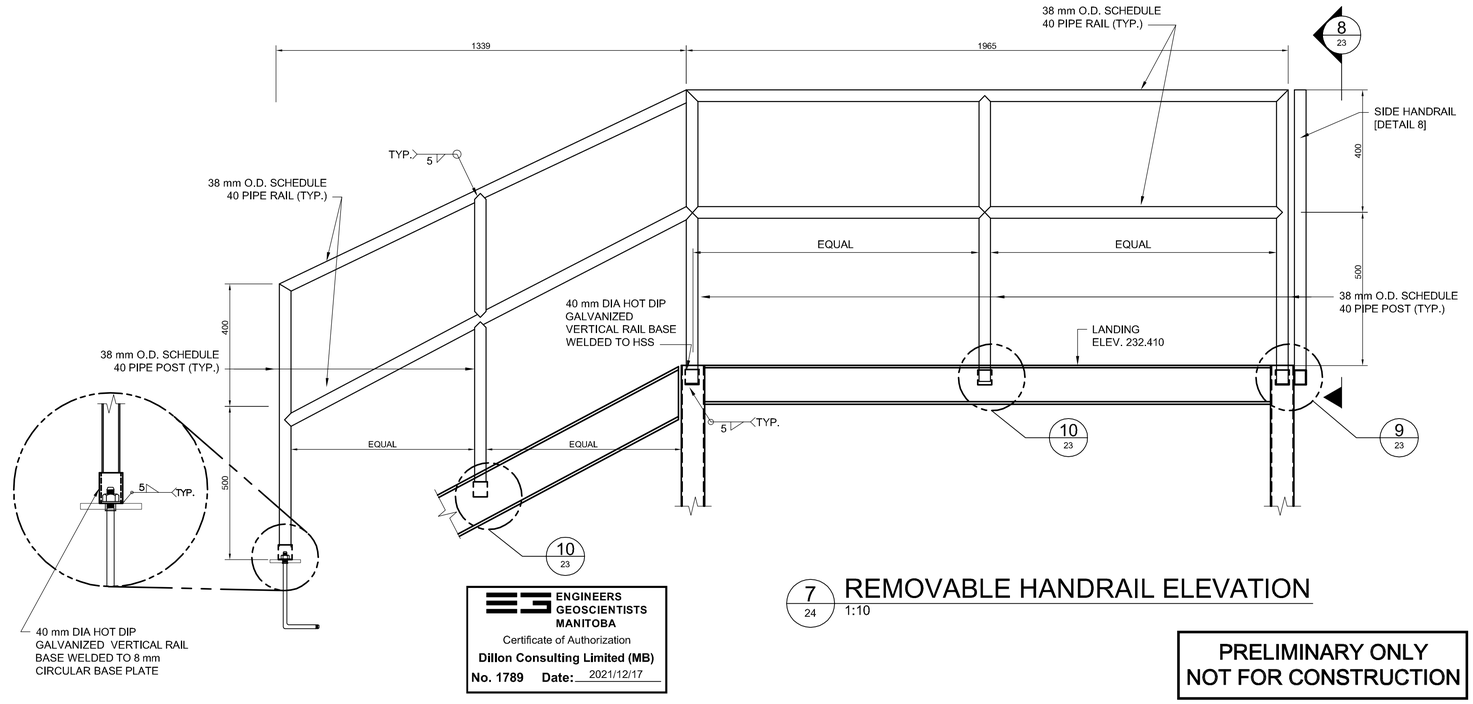

7/24 REMOVABLE HANDRAIL ELEVATION
1:10

ENGINEERS GEOSCIENTISTS MANITOBA
Certificate of Authorization
Dillon Consulting Limited (MB)
No. 1789 Date: 2021/12/17

PRELIMINARY ONLY
NOT FOR CONSTRUCTION

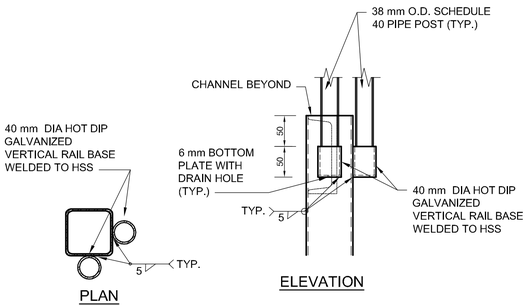

9/23, 24 DETAIL
1:5
VERTICAL RAIL BASE AT CORNER HSS

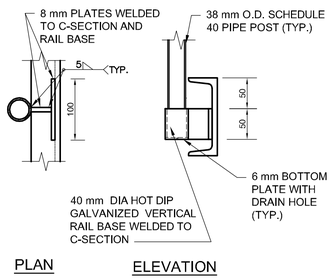

10/23, 24 DETAIL
1:5
VERTICAL RAIL BASE MOUNTED ON CHANNEL

UNDERGROUND STRUCTURES
SUPV. U/G STRUCTURES DATE
LOCATION OF UNDERGROUND STRUCTURES AS SHOWN ARE BASED ON THE BEST INFORMATION AVAILABLE, BUT NO GUARANTEE IS GIVEN THAT THE GIVEN LOCATIONS ARE EXACT. CONFIRMATION OF EXISTENCE AND EXACT LOCATION OF ALL SERVICES MUST BE OBTAINED FROM THE INDIVIDUAL UTILITIES BEFORE PROCEEDING WITH CONSTRUCTION.

B.M. ELEV.

NO.	REVISIONS	DATE	BY
0	ISSUED FOR TENDER	21/12/17	DBW

DESIGNED BY	MME
DRAWN BY	MME/DB
CHECKED BY	DRA
APPROVED BY	DRA
HOR. SCALE	AS NOTED
VERTICAL	AS NOTED

DILLON CONSULTING
RELEASED FOR CONSTRUCTION
DATE

ENGINEER'S SEAL
PROVINCE OF MANITOBA
ORIGINAL STAMPED BY
D.R.C. AMORIM
2021/12/17
Member 33215
REGISTERED PROFESSIONAL ENGINEER
CONSULTANT PROJECT NUMBER
20-2434

Winnipeg
THE CITY OF WINNIPEG
PUBLIC WORKS DEPARTMENT

2020 PAVEMENT RENEWALS
JUBILEE AVENUE RECONSTRUCTION
OSBORNE STREET TO PEMBINA HIGHWAY

STRUCTURAL GENERAL NOTES AND HANDRAIL DETAILS

CITY DRAWING NUMBER P-3550-23
SHEET 23 OF 73
CONSULTANT DRAWING NUMBER

C:\pw working directory\projects 2020\40th\dms91114\202434-09-STRP-CON.dwg