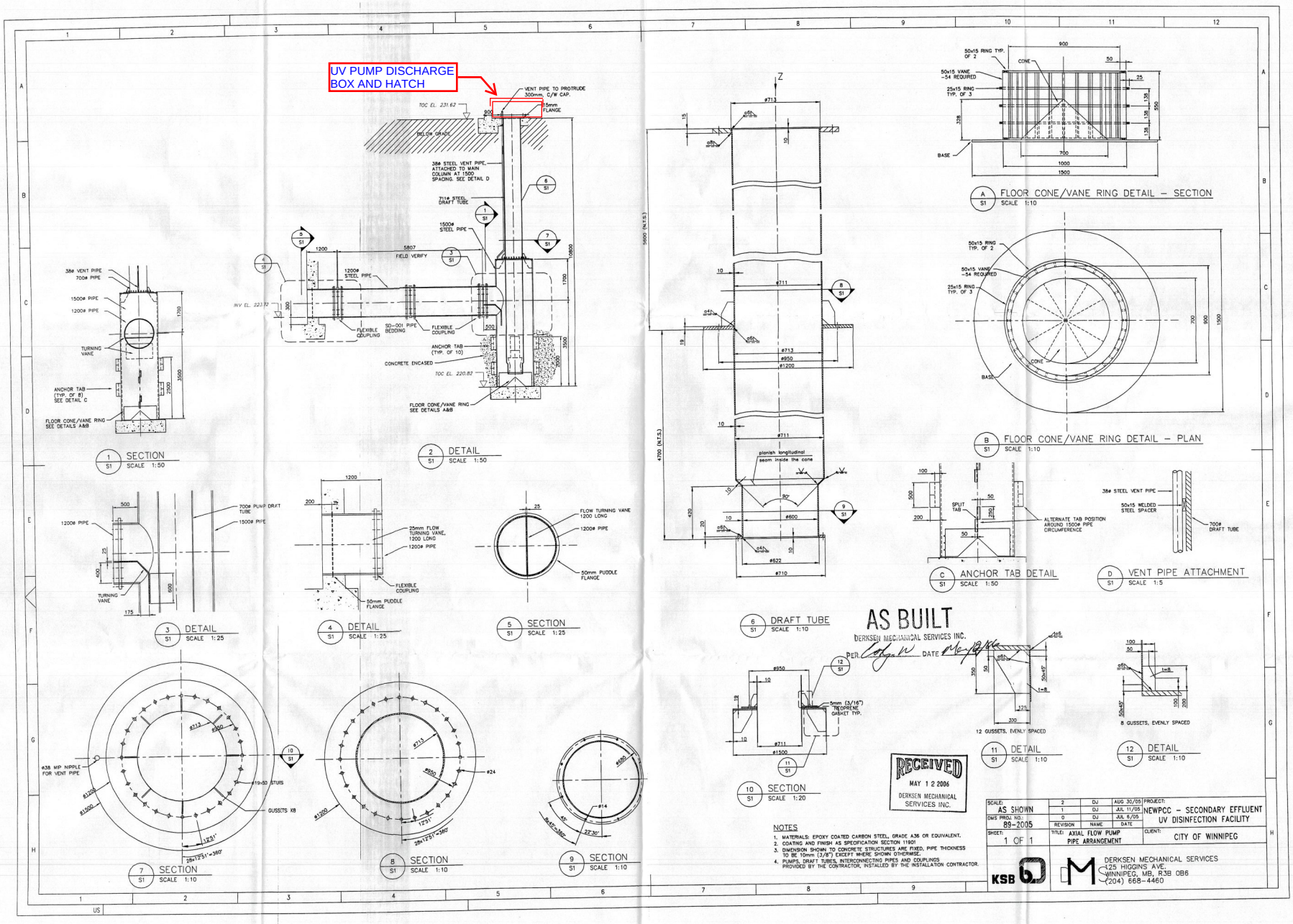
UV PUMP DISCHARGE BOX AND HATCH
VENT PIPE TO PROTRUDE 300mm, C/W CAP.
15mm FLANGE
TOC EL. 231.62
BELOW GRADE
38ø STEEL VENT PIPE, ATTACHED TO MAIN COLUMN AT 1500 SPACING. SEE DETAIL D
711ø STEEL DRAFT TUBE
1500ø STEEL PIPE
1200ø STEEL PIPE
5807 FIELD VERIFY
INV EL. 223.72
FLEXIBLE COUPLING
SD-001 PIPE BEDDING
ANCHOR TAB (TYP. OF 10)
CONCRETE ENCASED
TOC EL. 220.82
FLOOR CONE/VANE RING SEE DETAILS A&B
38ø VENT PIPE 700ø PIPE
1500ø PIPE
1200ø PIPE
TURNING VANE
ANCHOR TAB (TYP. OF 8) SEE DETAIL C
FLOOR CONE/VANE RING SEE DETAILS A&B
1 S1 SECTION SCALE 1:50
2 S1 DETAIL SCALE 1:50
5600 (N.T.S.)
4700 (N.T.S.)
ø713
ø711
ø950
ø1200
ø600
ø622
ø710
finish longitudinal seam inside the cone
6 S1 DRAFT TUBE SCALE 1:10
50x15 RING TYP. OF 2
50x15 VANE -54 REQUIRED
25x15 RING TYP. OF 3
CONE
BASE
A S1 FLOOR CONE/VANE RING DETAIL – SECTION SCALE 1:10
B S1 FLOOR CONE/VANE RING DETAIL – PLAN SCALE 1:10
SPLIT TAB
ALTERNATE TAB POSITION AROUND 1500ø PIPE CIRCUMFERENCE
C S1 ANCHOR TAB DETAIL SCALE 1:50
38ø STEEL VENT PIPE
50x15 WELDED STEEL SPACER
700ø DRAFT TUBE
D S1 VENT PIPE ATTACHMENT SCALE 1:5
1200ø PIPE
700ø PUMP DRAFT TUBE
1500ø PIPE
TURNING VANE
3 S1 DETAIL SCALE 1:25
25mm FLOW TURNING VANE, 1200 LONG
1200ø PIPE
FLEXIBLE COUPLING
50mm PUDDLE FLANGE
4 S1 DETAIL SCALE 1:25
FLOW TURNING VANE 1200 LONG
1200ø PIPE
50mm PUDDLE FLANGE
5 S1 SECTION SCALE 1:25
AS BUILT
DERKSEN MECHANICAL SERVICES INC.
PER. DATE
5mm (3/16") NEOPRENE GASKET TYP.
10 S1 SECTION SCALE 1:20
12 GUSSETS, EVENLY SPACED
11 S1 DETAIL SCALE 1:10
8 GUSSETS, EVENLY SPACED
12 S1 DETAIL SCALE 1:10
6x38 MP NIPPLE FOR VENT PIPE
19-50 STUDS
GUSSETS K8
7 S1 SECTION SCALE 1:10
8 S1 SECTION SCALE 1:10
9 S1 SECTION SCALE 1:10
RECEIVED
MAY 1 2 2006
DERKSEN MECHANICAL SERVICES INC.
NOTES
1. MATERIALS: EPOXY COATED CARBON STEEL, GRADE A36 OR EQUIVALENT.
2. COATING AND FINISH AS SPECIFICATION SECTION 11901
3. DIMENSION SHOWN TO CONCRETE STRUCTURES ARE FIXED, PIPE THICKNESS TO BE 10mm (3/8") EXCEPT WHERE SHOWN OTHERWISE.
4. PUMPS, DRAFT TUBES, INTERCONNECTING PIPES AND COUPLINGS PROVIDED BY THE CONTRACTOR, INSTALLED BY THE INSTALLATION CONTRACTOR.
SCALE: AS SHOWN
DMS PROJ. NO.: 89-2005
SHEET: 1 OF 1
2 DJ AUG 30/05
1 DJ JUL 11/05
0 DJ JUL 6/05
REVISION NAME DATE
TITLE: AXIAL FLOW PUMP PIPE ARRANGEMENT
PROJECT: NEWPCC – SECONDARY EFFLUENT UV DISINFECTION FACILITY
CLIENT: CITY OF WINNIPEG
KSB
DERKSEN MECHANICAL SERVICES
125 HIGGINS AVE.
WINNIPEG, MB. R3B 0B6
(204) 668-4460

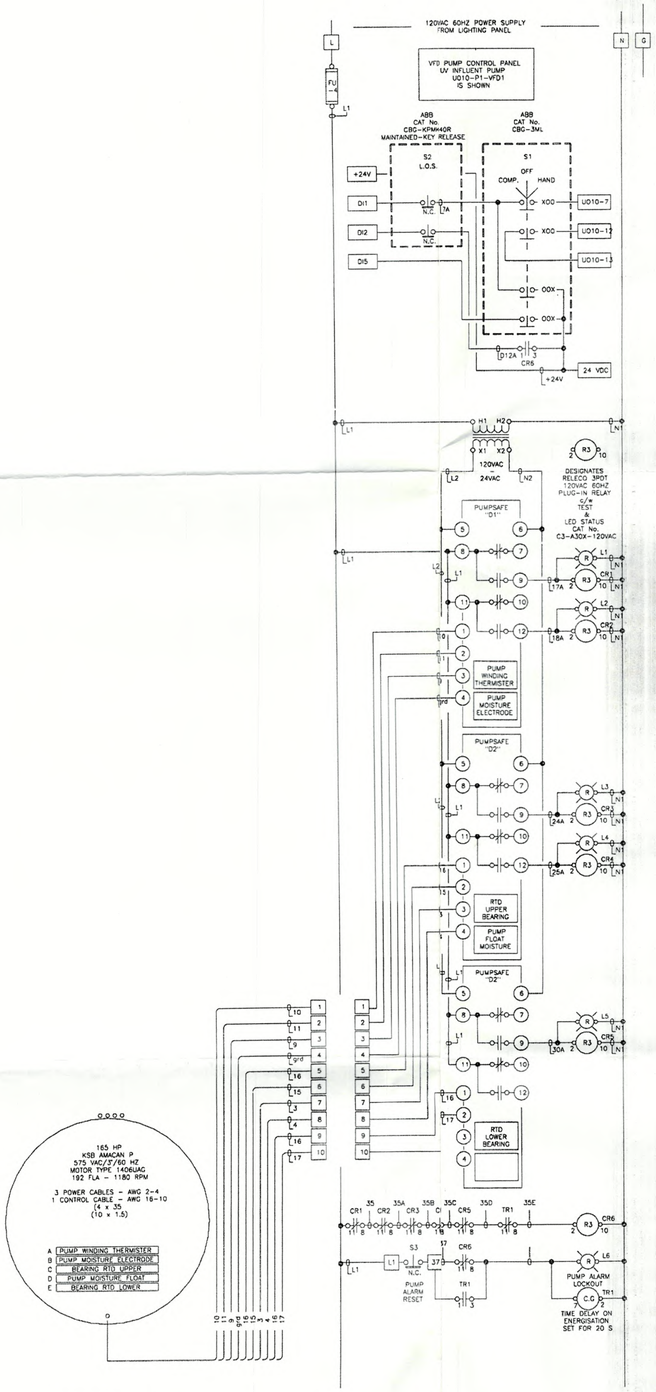

UV INFLUENT PUMP U010-P1-VFD1 IS SHOWN

REPEAT FOR

UV INFLUENT PUMP
U020-P1-VFD2
U030-P1-VFD3
U040-P1-VFD4
U050-P1-VFD5

VFD PUMP CONTROL PANEL UV INFLUENT PUMP U010-P1-VFD1 IS SHOWN

REPEAT FOR

UV INFLUENT PUMP
U020-P1-VFD2
U030-P1-VFD3
U040-P1-VFD4
U050-P1-VFD5

THIS DRAWING PRINTED MAY 29 2006 REPRESENTS THE "AS CONTRUCTED" VFD PUMP CONTROL SYSTEM

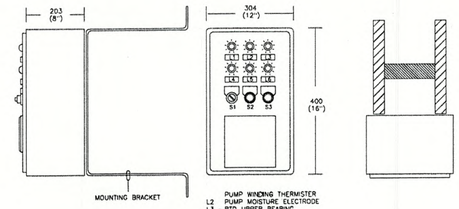

PUMP WINDING THERMISTER
L2 PUMP MOISTURE ELECTRODE
L3 - RTD UPPER BEARING
L4 - PUMP FLOAT MOISTURE
L5 - RTD LOWER BEARING
L6 - PUMP ALARM LOCKOUT
S1 - C-0-H SELECTOR
S2 - L.O.S. PUSHBUTTON (LOCK-OFF-STOP)
S3 - PUMP ALARM RESET
S4 - VFD DIGITAL KEYPAD

VFD PUMP CONTROL PANEL

HAMMOND, NEMA 12, WALL MOUNT ENCLOSURE (OR APPROVED EQUAL) CAT.No. 1418CAR, ASA 61 LT GREY

5 UNITS REQUIRED :

L1 - ABB CAT No. - CBG-KLFBR
L2 - - CBG-KLFBR
L3 - - CBG-KLFBR
L4 - - CBG-KLFBR
L5 - - CBG-KLFBR
L6 - - CBG-KLFBR
S1 - - CBG-3ML
S2 - - CBG-KPMK40R
S3 - - CBG-KPB

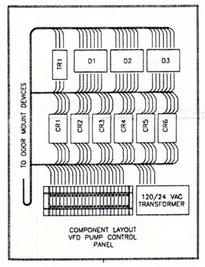

COMPONENT LAYOUT VFD PUMP CONTROL PANEL

VFD PUMP CONTROL PANEL

UV INFLUENT PUMP U010-P1-VFD1 IS SHOWN

REPEAT FOR

UV INFLUENT PUMP
U020-P1-VFD2
U030-P1-VFD3
U040-P1-VFD4
U050-P1-VFD5

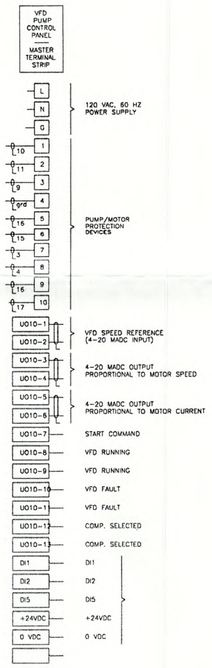

WIRE SCHEDULE		
COLOUR	GAUGE	SERVICE
BLACK - RED BLACK - BLACK } BAND BLACK - BLUE WHITE GREEN RED WHITE GREEN BLUE YELLOW BELDEN - AS REQUIRED	TO SUIT CODE & LOAD TO SUIT CODE & LOAD TO SUIT CODE & LOAD TO SUIT CODE & LOAD TO SUIT CODE & LOAD 14/16/18 TEW, 105°C 14/16/18 STRANDED 14/16/18 - 14/41 14/16/18 - 16/26 14/16/18 - 18/16 2/16 w/SHIELD & DRAIN	PHASE 1 PHASE 2 PHASE 3 } POWER CIRCUITS NEUTRAL GROUND 120VAC NEUTRAL GROUND D.C INTERLOCKS w/EXT.POWER 4-20MADC/0-10VDC

FUSE TABLE				
FUSE No.	MANUFACTURER	CAT. NO. STYLE	AMP. RATING	VOLTAGE RATING
FU-1 FU-2 FU-3 FU-4 FU-5 FU-6 FU-7 FU-8 FU-9 FU-10	BUSSMANN	FRN-R	5.0	250

THIS DRAWING PRINTED MAY 29 2006 REPRESENTS THE "AS CONTRUCTED" VFD PUMP CONTROL SYSTEM

PROJECT NAME

CITY OF WINNIPEG
NORTH END WATER POLLUTION CONTROL CENTRE
BID OPPORTUNITY No. 89-2005
DISINFECTION PROJECT
VERTICAL AXIAL FLOW PROPELLOR PUMPS
VARIABLE FREQUENCY DRIVES
CUSTOMER INDUSTRIAL FLUID CONSULTANTS LIMITED
P.O. JUNE 17 2005

REVISIONS	
A	"AS CONSTRUCTED" TAM - MAY 29 2006

APPLIED PRODUCTS & SYSTEMS INC.
414 NORTH SERVICE ROAD EAST
SECOND FLOOR
OAKVILLE, ONTARIO, CANADA, L6H 5R2
905 842 9325 (T) 905 842 9777 (F)

TITLE

VARIABLE FREQUENCY DRIVE PUMP CONTROL PANEL FOR VERTICAL AXIAL FLOW PROPELLOR PUMPS

PROJECT				
CITY OF WINNIPEG NORTH END WATER POLLUTION CONTROL CENTRE VFD'S-VERTICAL AXIAL FLOW PROPELLOR PUMPS	DWN JBA	DATE 2006-05-25	BILL MAT'L OR NEXT ASS'Y	
	CKD GW	DATE 2006-05-26	DRAWING No	REV
DRG REF AUTOCAD-2002: KSB-IFCL-01 JUNE 17 2005	APPD TAM	DATE 2006-05-29	D2005-06-17-02-01	A

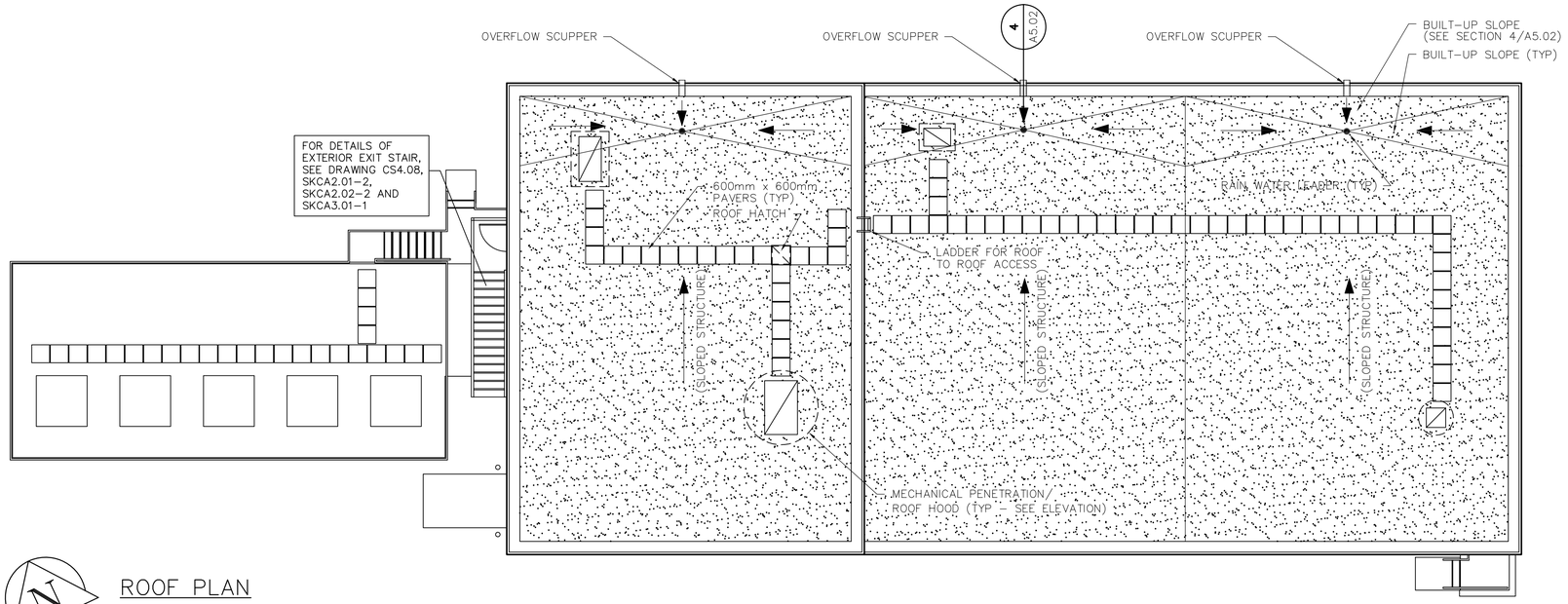

ROOF PLAN
SCALE 1:100

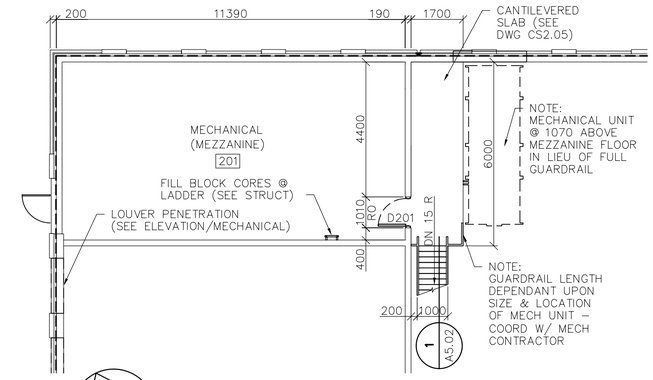

MEZZANINE FLOOR PLAN
SCALE 1:100

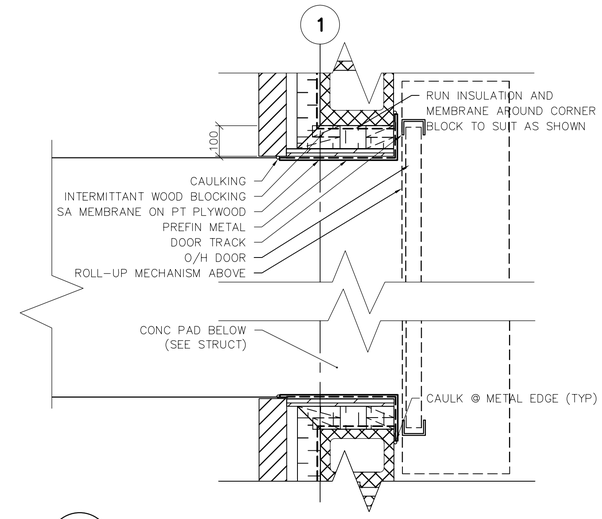

1 A2.01 PLAN DETAIL @ LOADING DOOR
SCALE 1:10

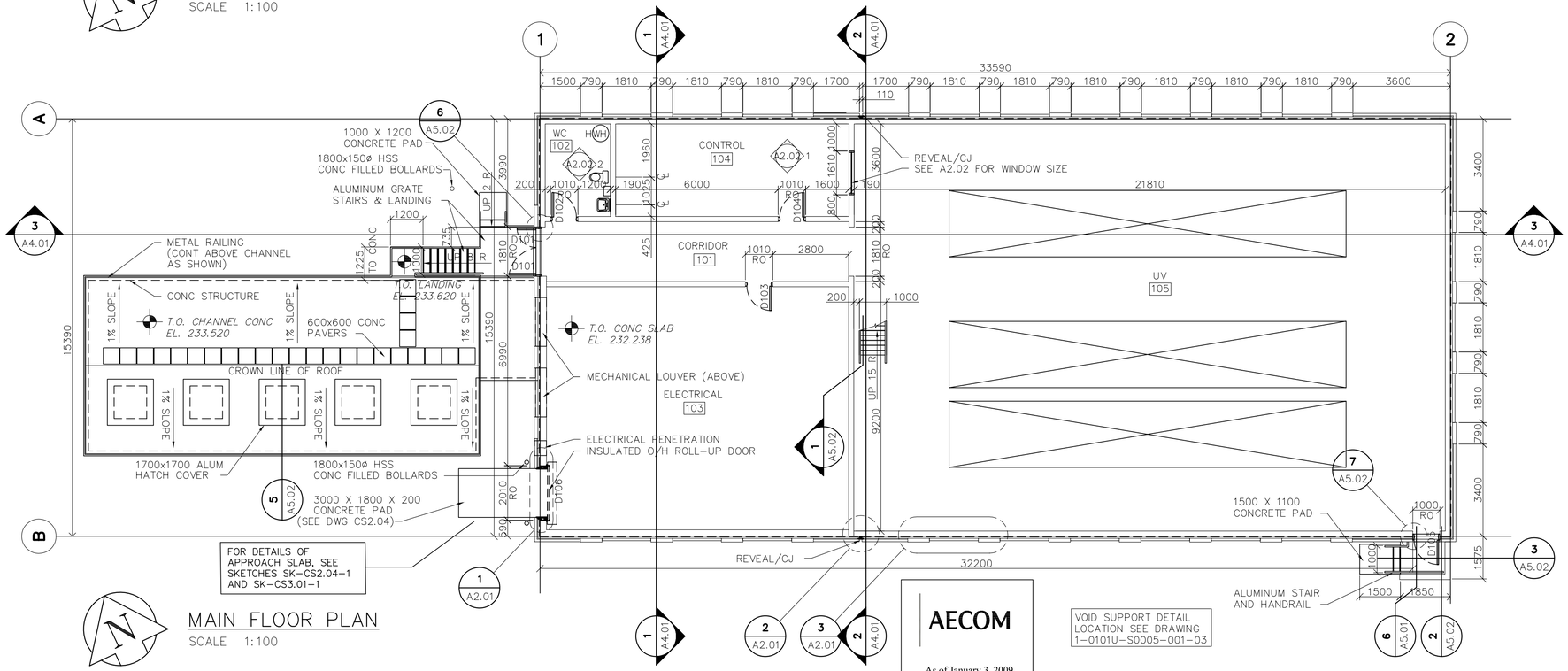

MAIN FLOOR PLAN
SCALE 1:100

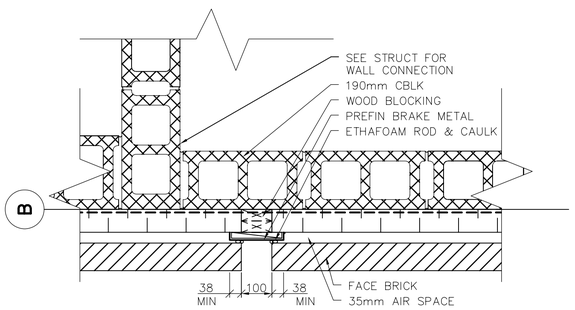

2 A2.01 PLAN DETAIL @ REVEAL/CONTROL JOINT
SCALE 1:10

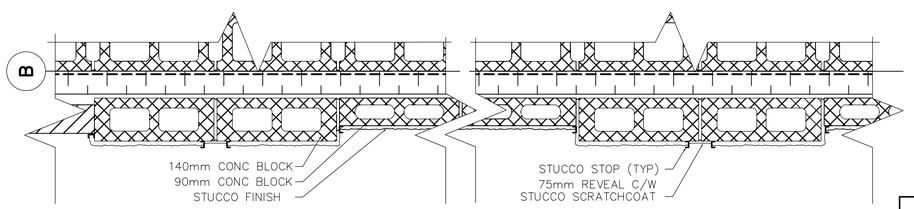

3 A2.01 TYPICAL PLAN DETAIL @ STUCCO REVEAL
SCALE 1:10

AECOM

As of January 3, 2009, EarthTech became AECOM Canada Ltd.

VOID SUPPORT DETAIL LOCATION SEE DRAWING 1-0101U-S0005-001-03

AECOM AS - CONSTRUCTED
SIG.,..... DATE.....

APEGM
Certificate of Authorization
AECOM Canada Ltd.
Original dated on:
No. 4671 Date: 2005/02/18

AS BUILT PER
GATEWAY
CONSTRUCTION & ENGINEERING LTD.
MARCH 14/07

B.M.
ELEV.

NO.	REVISIONS	DATE	BY
2	AS-CONSTRUCTED DRAWING	07/03/14	GC
1	ISSUED FOR CONSTRUCTION	05/06/08	LAE
0	ISSUED FOR TENDER	05/02/18	LK

EARTH TECH
Earth Tech (Canada) Inc. Winnipeg, Manitoba 204.477.5381

DESIGNED BY	NC	CHECKED BY	NC, GGP
DRAWN BY	LK	APPROVED BY	DT
HOR. SCALE:	AS NOTED	RELEASED FOR CONSTRUCTION BY:	
VERTICAL SCALE:	AS NOTED	T. KJARTANSON	
DATE	02004/12/08	DATE	2005-02-18

ENGINEER'S SEAL
ORIGINAL SIGNED BY
NEIL COOPER
FEB. 18/05

CONSULTANT DRAWING NO.
66303D-CA2.01

Winnipeg
THE CITY OF WINNIPEG
WATER AND WASTE DEPARTMENT

NEWPCC - SECONDARY EFFLUENT UV DISINFECTION FACILITY

ARCHITECTURAL
PLAN ABOVE ELEVATION 233.520, MEZZANINE & ROOF PLAN AND DETAILS

CITY FILE NUMBER
SHEET 2 OF 8
CITY DRAWING NUMBER
1-0101U-B0002-001-02

SHEET: CoW-A1-WMD (11/2002)

Jul 28, 2009 - 11:01am PLOTTED BY: reg.hall LAYOUT:ET FILE:L:\work\66000\66303da\02a-CAD\ALL\SUBMISSION\As Built-Record\As-Constructed DWG\1-0101U-B0002-001-02D.dwg

SHEET: CW-A1-WWD (1/2002)

NOTES

1. THE PDC UNITS, THE VFD'S FOR PUMPS 1 TO 5 AND THE HARMONIC FILTERS AND LOAD FILTERS FOR PUMPS 1 TO 5 ARE SUPPLIED TO THE CONTRACTOR FOR CONNECTION (PDC) AND INSTALLATION (FILTERS & VFD'S).

AECOM

As of January 3, 2009, EarthTech became AECOM Canada Ltd.

AECOM AS-CONSTRUCTED
SIG..... DATE.....

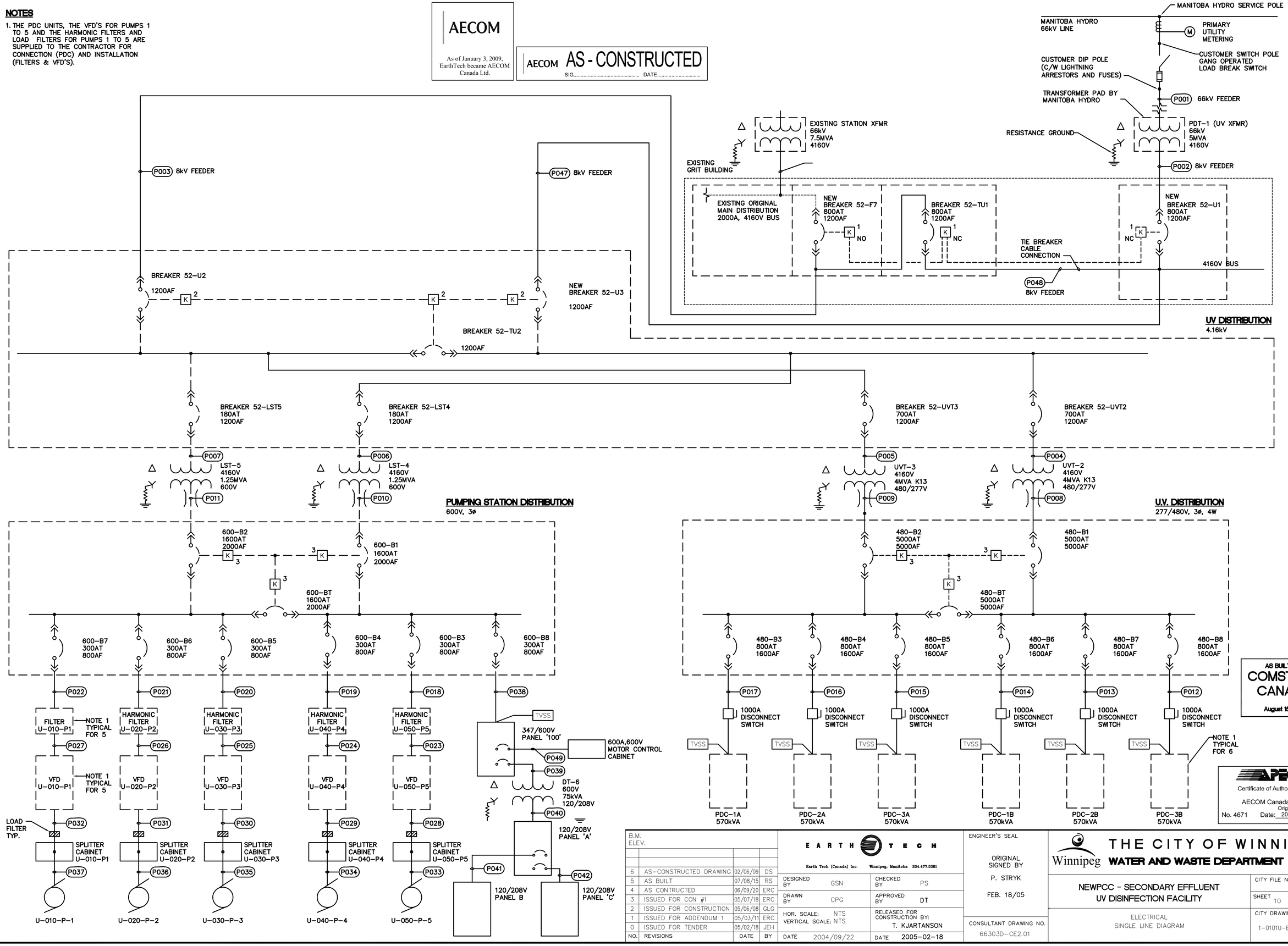

AS BUILT PER
COMSTOCK CANADA
August 15 2007

APEGM
Certificate of Authorization
AECOM Canada Ltd.
Original dated on:
No. 4671 Date: 2005/02/18

NO.	REVISIONS	DATE	BY
6	AS-CONSTRUCTED DRAWING	02/06/09	DS
5	AS BUILT	07/08/15	RS
4	AS CONTRUCTED	06/09/20	ERC
3	ISSUED FOR CCN #1	05/07/18	ERC
2	ISSUED FOR CONSTRUCTION	05/06/08	GLG
1	ISSUED FOR ADDENDUM 1	05/03/11	ERC
0	ISSUED FOR TENDER	05/02/18	JEH

B.M.
ELEV.

EARTH TECH
Earth Tech (Canada) Inc. Winnipeg, Manitoba 204.477.5381

DESIGNED BY	GSN	CHECKED BY	PS
DRAWN BY	CPG	APPROVED BY	DT
HOR. SCALE:	NTS	RELEASED FOR CONSTRUCTION BY:	T. KJARTANSON
VERTICAL SCALE:	NTS		
DATE	2004/09/22	DATE	2005-02-18

ENGINEER'S SEAL
ORIGINAL SIGNED BY
P. STRYK
FEB. 18/05

CONSULTANT DRAWING NO.
66303D-CE2.01

Winnipeg
THE CITY OF WINNIPEG
WATER AND WASTE DEPARTMENT

NEWPCC - SECONDARY EFFLUENT UV DISINFECTION FACILITY

ELECTRICAL
SINGLE LINE DIAGRAM

CITY FILE NUMBER
SHEET 10 OF 15
CITY DRAWING NUMBER
1-0101U-E0001-001-06

Jul 28, 2009 - 11:19am PLOTTED BY: reg.hall LAYOUT:Layout1 FILE:L:\work\66000\66303ds\02a-CAD\ALL\SUBMISSION\As Built-Record\As-Constructed DWG\1-0101U-E0001-001-06D.dwg

SHEET: CoW-A1-WND (11/2002)

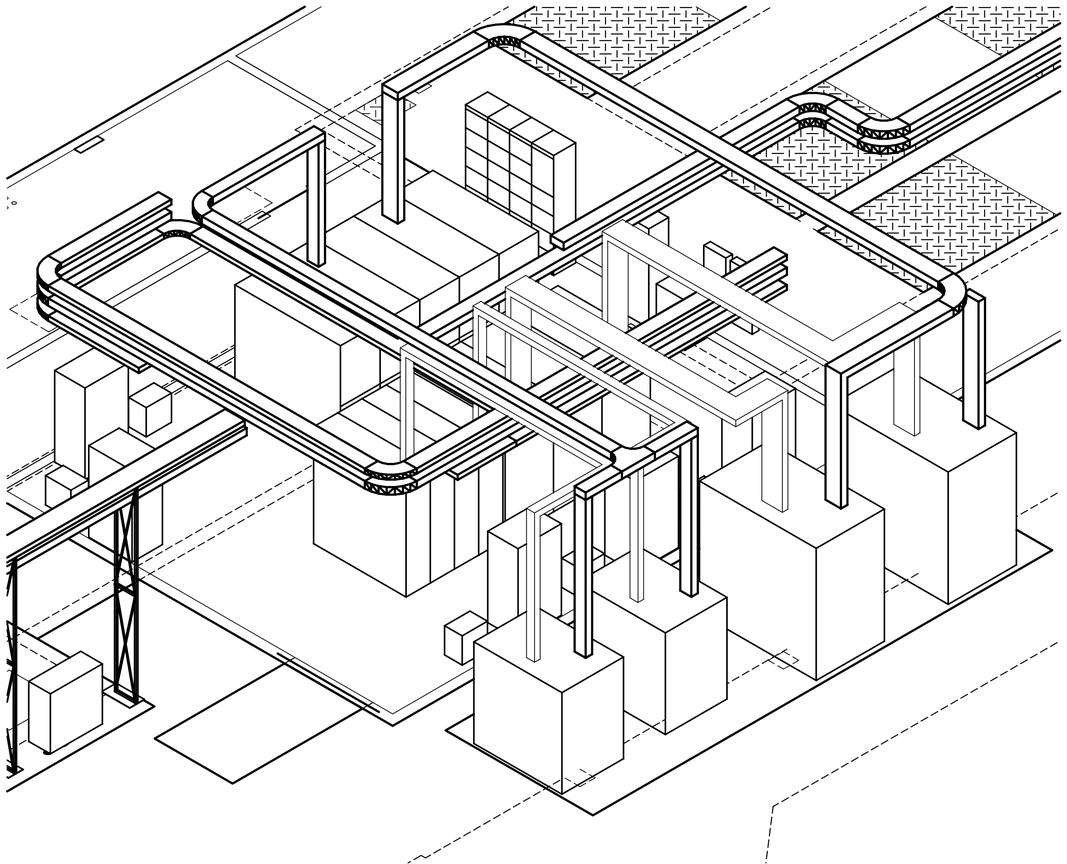

A E2-05 SW ISOMETRIC
SCALE 1:50

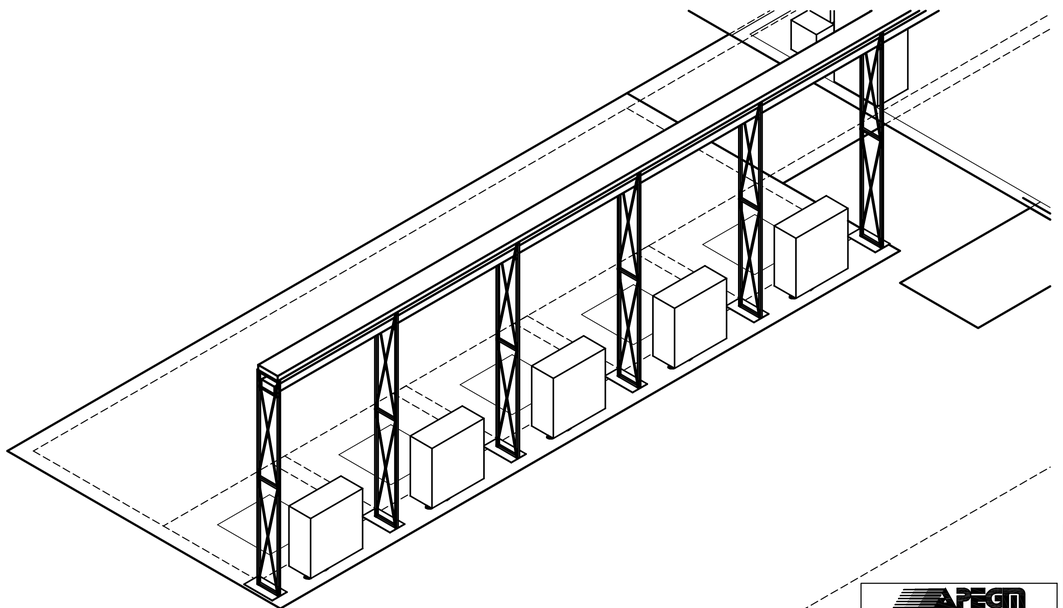

C E2-05 SW ISOMETRIC – PUMP AREA
SCALE 1:50

AECOM

As of January 3, 2009, EarthTech became AECOM Canada Ltd.

AECOM AS - CONSTRUCTED
SIG..... DATE.....

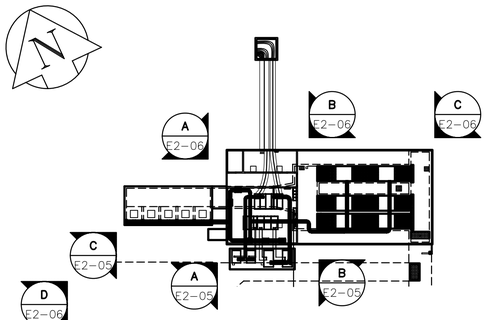

KEY PLAN
SCALE 1:500

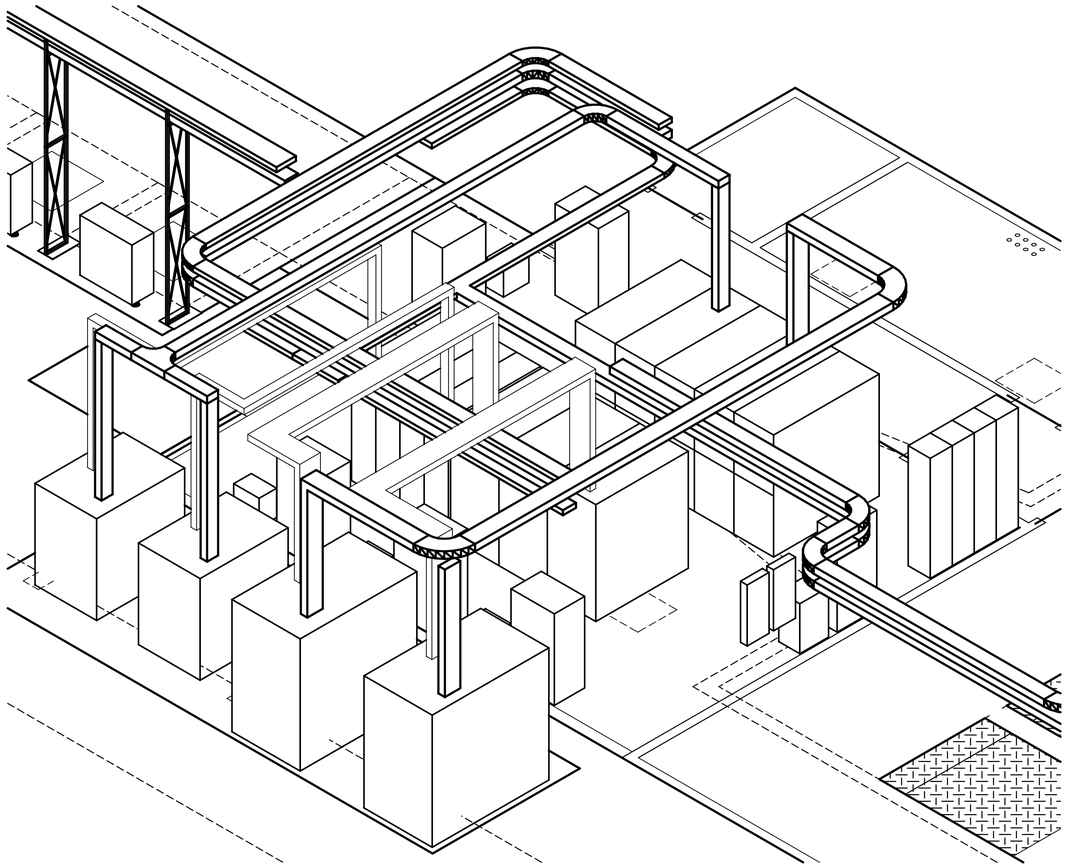

B E2-05 SE ISOMETRIC
SCALE 1:50

AS BUILT PER
COMSTOCK CANADA
August 15 2007

APEGM
Certificate of Authorization
AECOM Canada Ltd.
Original dated on:
No. 4671 Date: 2005/02/18

B.M.
ELEV.

NO.	REVISIONS	DATE	BY
3	AS-CONSTRUCTED DRAWING	07/08/15	CT
1	ISSUED FOR CONSTRUCTION	05/06/08	GLG
0	ISSUED FOR TENDER	05/02/18	JEH

EARTH TECH
Earth Tech (Canada) Inc. Winnipeg, Manitoba 204.477.5381

DESIGNED BY	GSN	CHECKED BY	PS
DRAWN BY	CPG	APPROVED BY	DT
HOR. SCALE: 1:50 VERTICAL SCALE: 1:50		RELEASED FOR CONSTRUCTION BY: T. KJARTANSON	
DATE	2005/02/04	DATE	2005-02-18

ENGINEER'S SEAL
ORIGINAL SIGNED BY
P. STRYK
FEB. 18/05

CONSULTANT DRAWING NO.
66303D-CE2.05

Winnipeg THE CITY OF WINNIPEG
WATER AND WASTE DEPARTMENT

NEWPCC - SECONDARY EFFLUENT
UV DISINFECTION FACILITY

ELECTRICAL SHEET 1 OF 2
ELECTRICAL ROOM EQUIPMENT
AND CABLE TRAY ARRANGEMENTS

CITY FILE NUMBER
SHEET 14 OF 15
CITY DRAWING NUMBER
1-0101U-E0004-001-03

Jul 28, 2009 – 11:24am PLOTTED BY: reg.hall LAYOUT:Layout1 FILE:L:\work\66000\66303D is\02a-CAD\ALL\SUBMISSION\As Built-Record\As-Constructed DWG\1-0101U-E0004-001-030.dwg

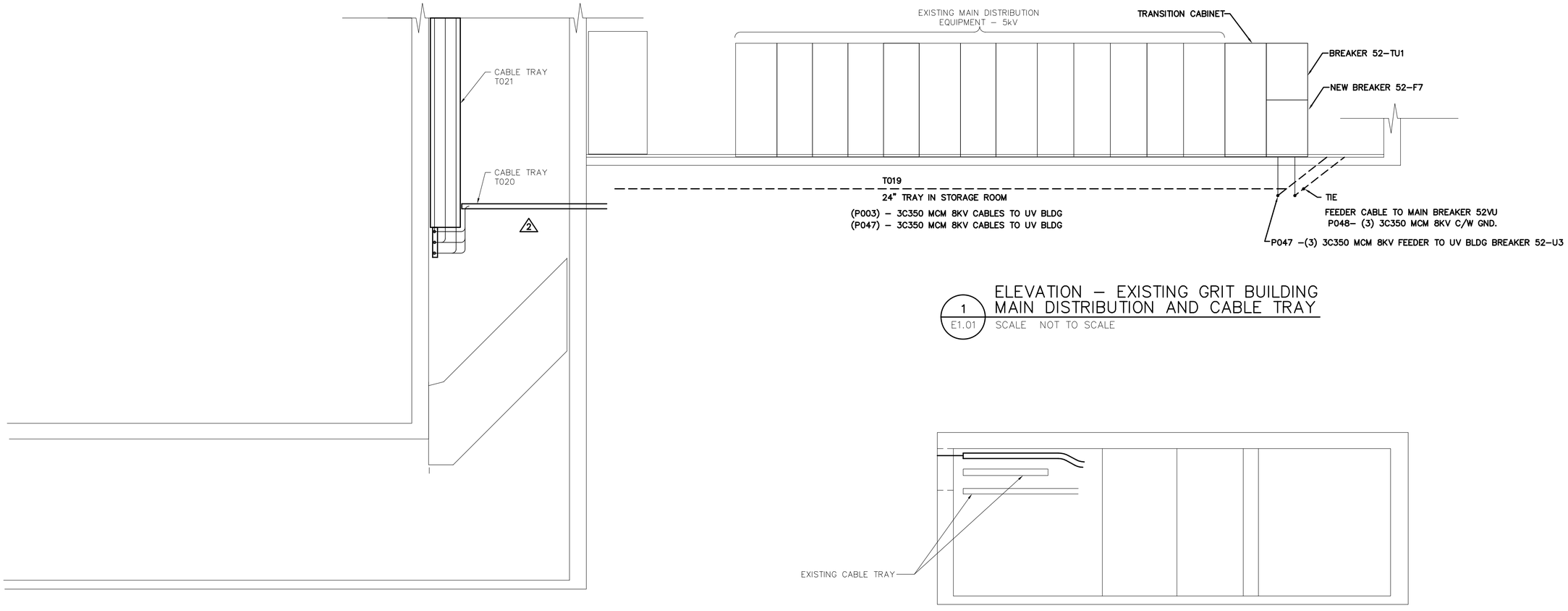

1 E1.01 ELEVATION – EXISTING GRIT BUILDING MAIN DISTRIBUTION AND CABLE TRAY

SCALE NOT TO SCALE

2 E1.01 SECTION A – EAST END GRIT BUILDING (GALLERY 1)

SCALE NOT TO SCALE

NOTE

1. REFER TO DRAWING E1–01 AND RACEWAY SCHEDULES FOR CONTINUATION OF CABLE TRAY

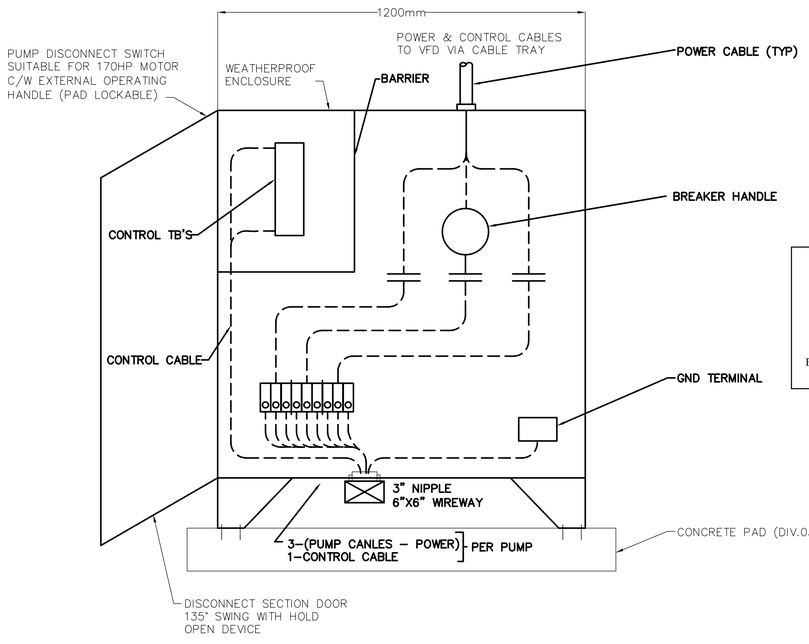

1 E2.02 PUMP POWER AND CONTROL CONNECTION PANEL

SCALE NOT TO SCALE

NOTE

1. DISCONNECT PUMP SWITCH TO BE SIZED TO PUMP MOTOR RATED HORSE POWER
2. CONTROL SECTION TO BE COMPLETE WITH DISCONNECT TERMINAL BLOCKS AS REQUIRED BY PUMP MANUFACTURER (REFER TO SPECIFICATION SECTION 11).

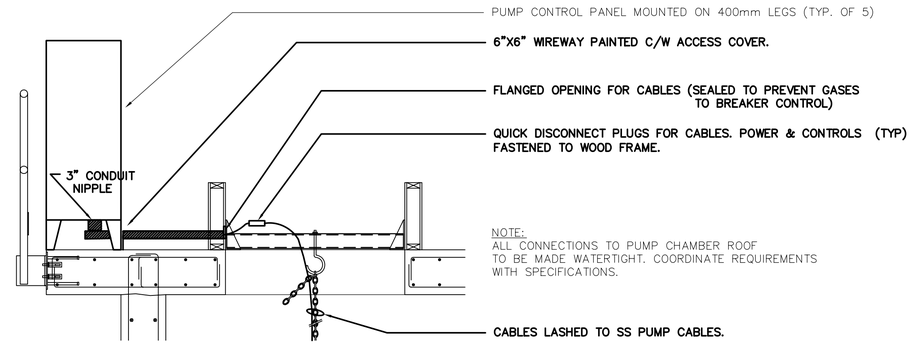

2 E2.02 PUMP PANEL WIRING DISCONNECTION/RE–CONNECTION DETAIL

SCALE NOT TO SCALE

AECOM

As of January 3, 2009, EarthTech became AECOM Canada Ltd.

AECOM AS-CONSTRUCTED

SIG.....DATE.....

AS BUILT PER COMSTOCK CANADA August 15 2007

APEGM Certificate of Authorization

AECOM Canada Ltd.

Original dated on:

No. 4671 Date: 2005/02/18

B.M.
ELEV.

NO.	REVISIONS	DATE	BY
3	AS–CONSTRUCTED DRAWING	07/08/15	RS
2	ISSUED FOR CCN #1	05/07/18	ERC
1	ISSUED FOR CONSTRUCTION	05/06/08	GLG
0	ISSUED FOR TENDER	05/02/18	JEH

EARTH TECH

Earth Tech (Canada) Inc. Winnipeg, Manitoba 204.477.5381

DESIGNED BY	GSN	CHECKED BY	PS
DRAWN BY	ERC	APPROVED BY	DT
HOR. SCALE:	AS NOTED	RELEASED FOR CONSTRUCTION BY:	T. KJARTANSON
VERTICAL SCALE:	AS NOTED		
DATE	2005/01/04	DATE	2005–02–18

ENGINEER'S SEAL

ORIGINAL SIGNED BY

P. STRYK

FEB. 18/05

CONSULTANT DRAWING NO.

66303D–CE2.04

Winnipeg THE CITY OF WINNIPEG

WATER AND WASTE DEPARTMENT

NEWPCC - SECONDARY EFFLUENT UV DISINFECTION FACILITY

ELECTRICAL DISTRIBUTION DETAILS

CITY FILE NUMBER

SHEET 13 OF 15

CITY DRAWING NUMBER

1–0101U–E0010–001–03

Jul 28, 2009 – 11:44am PLOTTED BY: reg.hall LAYOUT:Layout1 FILE:L:\work\66000\66303dia\02a–CAD\ALL\SUBMISSION\As Built–Record\As–Constructed DWG\1–0101U–E0010–001–03D.dwg

SHEET: CW–A1–WWD (11/2002)

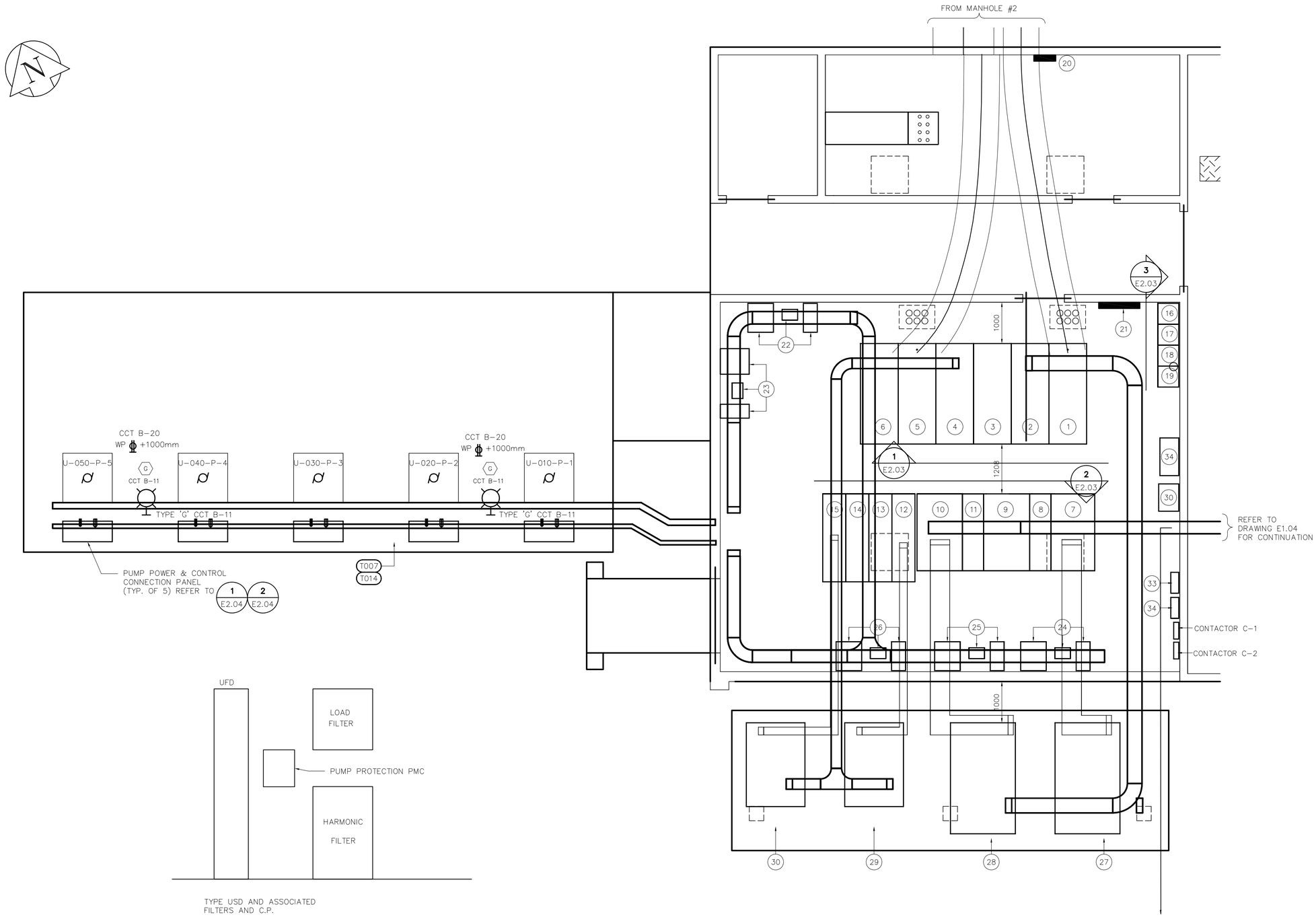

PLAN VIEW
SCALE 1:50

LEGEND

1	52-L1
2	52-UVT2, LST-4
3	AUX COMP.
4	52-T
5	52-UVT3, 52-LST5
6	52-L2 SERVICE FROM GRIT BUILDING
7	480-B1 - 5000AF, 5000AT
8	480-B6, 480-B7, 480-B8 - 1600AF, 800AT
9	480-BT - 5000AF, 5000AT
10	480-B2 - 5000AF, 5000AT
11	480-B3, 480-B4, 480-B5 - 1600AF, 800AT
12	600-B1 - 2000AF, 1600AT 600-B8 - 800AF, 300AT 600-B3 - 800AF, 300AT
13	600-BT - 2000AF, 1600AT 600-B3, 600-B4 - 800AF, 300AT
14	600-B5, 600-B6, 600-B7 - 800AF, 300AT
15	600-B2 - 2000AF, 1600AT 600-B7 - 800AF, 300AT
16	MCC
17	MCC
18	MCC
19	MCC
20	BUS BAR REFER TO DETAIL 5 DRAWING E1.08
21	MAIN EQUIPMENT BUS BAR REFER TO DETAIL 5 DRAWING E1.08
22	VFD U-010-P1, HARMONIC FILTER, LOAD FILTER AND PUMP PROTECTION PHL
23	VFD U-020-P2, HARMONIC FILTER, LOAD FILTER AND PUMP PROTECTION PHL
24	VFD U-030-P3, HARMONIC FILTER, LOAD FILTER AND PUMP PROTECTION PHL
25	VFD U-040-P4, HARMONIC FILTER, LOAD FILTER AND PUMP PROTECTION PHL
26	VFD U-050-P5, HARMONIC FILTER, LOAD FILTER AND PUMP PROTECTION PHL
27	TRANSFORMER UVT-2
28	TRANSFORMER UVT-3
29	TRANSFORMER LST-4
30	TRANSFORMER LST-5
31	PANEL 100
32	TRANSFORMER DT-6
33	PANEL A
34	PANEL B

NOTES:

1. REFER TO DRAWING E1.03 FOR LUMINAIRE SCHEDULE.

AECOM

As of January 3, 2009, EarthTech became AECOM Canada Ltd.

AECOM AS-CONSTRUCTED
SIG..... DATE.....

AS BUILT PER
COMSTOCK CANADA
August 15 2007

APEGM
Certificate of Authorization
AECOM Canada Ltd.
Original dated on:
No. 4671 Date: 2005/02/18

B.M.
ELEV.

NO.	REVISIONS	DATE	BY
3	AS-CONSTRUCTED DRAWING	07/08/15	RS
2	ISSUED FOR CCN #1	05/07/18	ERC
1	ISSUED FOR CONSTRUCTION	05/06/08	GLG
0	ISSUED FOR TENDER	05/02/18	JEH

EARTH TECH
Earth Tech (Canada) Inc. Winnipeg, Manitoba 204.477.5381

DESIGNED BY	GSN	CHECKED BY	PS
DRAWN BY	CPG	APPROVED BY	DT
HOR. SCALE:	1:50	RELEASED FOR CONSTRUCTION BY:	T. KJARTANSON
VERTICAL SCALE:	1:50		
DATE	2004/10/05	DATE	2005-02-18

ENGINEER'S SEAL
ORIGINAL SIGNED BY
P. STRYK
FEB. 18/05

CONSULTANT DRAWING NO.
66303D-CE2.02

Winnipeg
THE CITY OF WINNIPEG
WATER AND WASTE DEPARTMENT

NEWPCC - SECONDARY EFFLUENT
UV DISINFECTION FACILITY

ELECTRICAL
ELECTRICAL ROOM PLAN
WITH ASSOCIATED EQUIPMENT

CITY FILE NUMBER
SHEET 11 OF 15
CITY DRAWING NUMBER
1-0101U-E0011-001-03

SHEET: CW-A1-WND (11/2002)

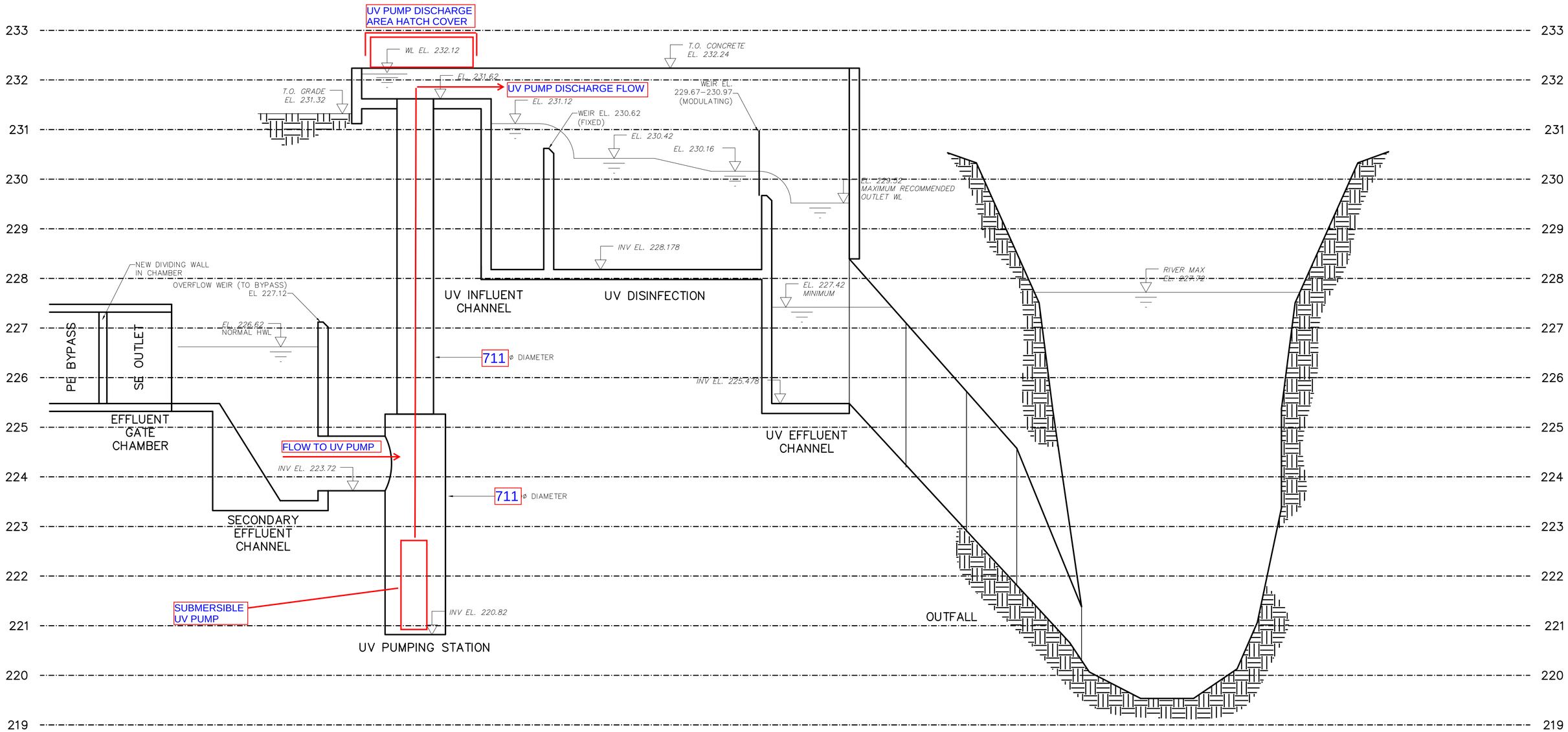

NOTES:

1. MINIMUM WL AT OUTFALL INLET IS LEVEL IMPOSED BY OUTFALL GEOMETRY TO CONVEY 380 ML/d.
2. MAXIMUM RIVER LEVEL SHOWN IS MAXIMUM RIVER LEVEL AT WHICH DISINFECTION CAN FUNCTION.

AECOM

As of January 3, 2009, EarthTech became AECOM Canada Ltd.

AECOM AS - CONSTRUCTED
SIG..... DATE.....

APEGM
Certificate of Authorization
AECOM Canada Ltd.
No. 4671 Date: Original dated on: 2005/02/18

NO.	REVISIONS	DATE	BY
02	AS–CONSTRUCTED DRAWING	08/10/16	RJH
01	ISSUED FOR CONSTRUCTION	05/06/08	GLG
00	ISSUED FOR TENDER	05/02/18	JEH

B.M. ELEV.

EARTH TECH
Earth Tech (Canada) Inc. Winnipeg, Manitoba 204.477.5381

DESIGNED BY	CGL	CHECKED BY	DT
DRAWN BY	KJW	APPROVED BY	DT
HOR. SCALE: VERTICAL SCALE:		RELEASED FOR CONSTRUCTION BY:	T. KJARTANSON
DATE	2004/11/03	DATE	2005–02–18

ENGINEER'S SEAL
ORIGINAL SIGNED BY
D.J. TANIGUCHI
FEB. 18/05

CONSULTANT DRAWING NO.
66303D–CP1.02

Winnipeg
THE CITY OF WINNIPEG
WATER AND WASTE DEPARTMENT

NEWPCC - SECONDARY EFFLUENT UV DISINFECTION FACILITY

PROCESS HYDRAULIC PROFILE @ 380 ML/d

CITY FILE NUMBER
SHEET OF
CITY DRAWING NUMBER
1–0101U–P0002–001–02

Jul 28, 2009 – 1:50pm PLOTTED BY: reg.hall LAYOUT:Layout1 FILE:L:\work\66000\66303dia\02a–CAD\ALL\SUBMISSION\As Built–Record\As–Constructed DWG\1–0101U–P0002–001–02D.dwg

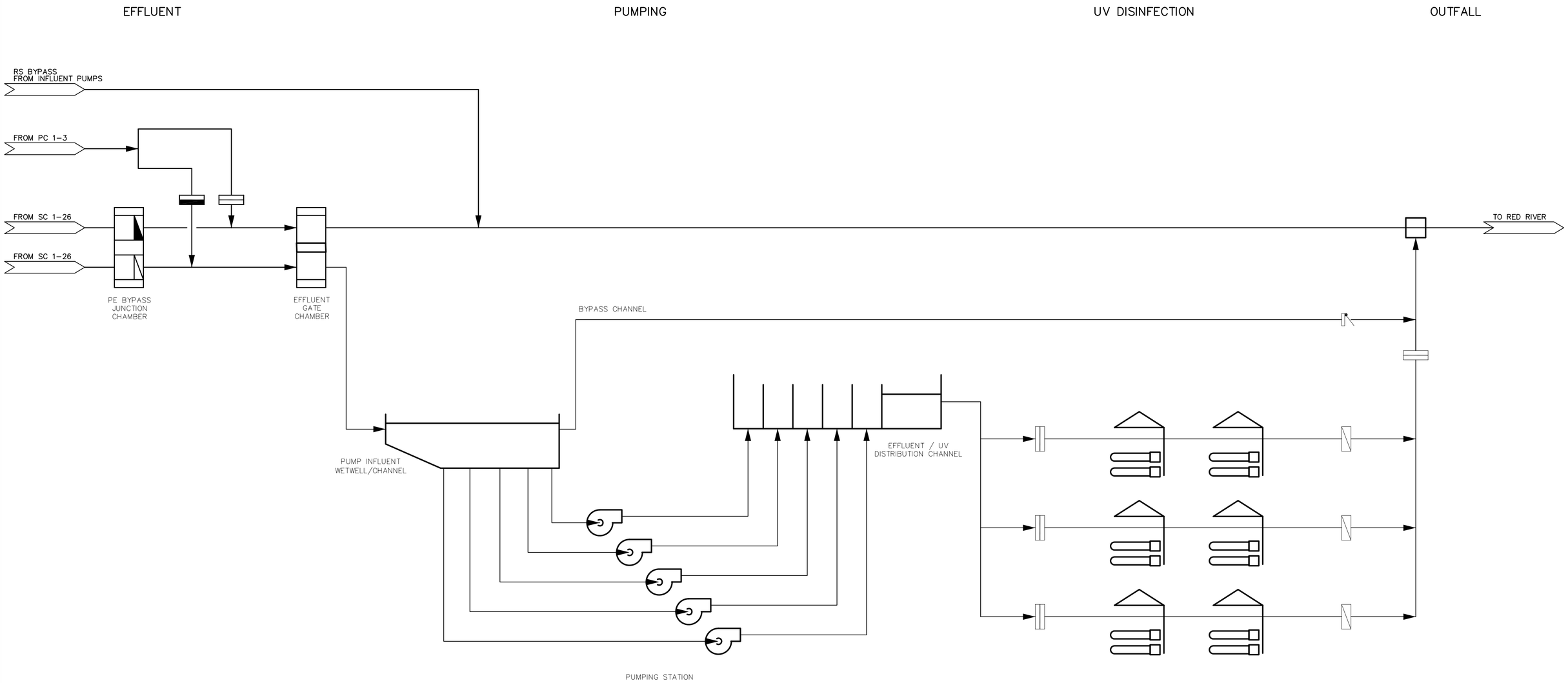

UV INFLUENT PUMPS

TYPE: AXIAL FLOW PROPELLER
TDH: 6-7m
SPEED: VFD
POWER: 127 kW (est)

UV CHANNELS 1-3

TYPE: MEDIUM PRESSURE HIGH INTENSITY
BANKS / CHANNEL: 2
NO OF LAMPS: 1008
CAPACITY: 143 ML/d PER CHANNEL
DIMENSIONS: 2440 w X 4060 d X 15000
HEADLOSS @ MAX FLOW: 260 mm

AECOM

As of January 3, 2009, EarthTech became AECOM Canada Ltd.

AECOM AS-CONSTRUCTED
SIG..... DATE.....

APEGM
Certificate of Authorization
AECOM Canada Ltd.
Original dated on:
No. 4671 Date: 2005/02/18

B.M.
ELEV.

NO.	REVISIONS	DATE	BY
02	AS-CONSTRUCTED DRAWING	08/10/16	RJH
01	ISSUED FOR CONSTRUCTION	05/06/08	GLG
00	ISSUED FOR TENDER	05/02/18	JEH

EARTH TECH
Earth Tech (Canada) Inc. Winnipeg, Manitoba 204.477.5381

DESIGNED BY	CGL	CHECKED BY	DT
DRAWN BY	KJW	APPROVED BY	DT
HOR. SCALE: VERTICAL SCALE:		RELEASED FOR CONSTRUCTION BY:	T. KJARTANSON
DATE	2004/11/03	DATE	2005-02-18

ENGINEER'S SEAL
ORIGINAL SIGNED BY
D.J. TANIGUCHI
FEB. 18/05

CONSULTANT DRAWING NO.
66303D-CP1.03

Winnipeg
THE CITY OF WINNIPEG
WATER AND WASTE DEPARTMENT

NEWPCC - SECONDARY EFFLUENT
UV DISINFECTION FACILITY

PROCESS
PROCESS FLOW DIAGRAM

CITY FILE NUMBER
SHEET OF
CITY DRAWING NUMBER
1-0101U-P0003-001-02

Jul 28, 2009 - 1:52pm PLOTTED BY: reg.hall LAYOUT: Layout1 FILE: L:\work\66000\66303da\02a-CAD\ALL\SUBMISSION\As Built-Record\As-Constructed DWG\1-0101U-P0003-001-02D.dwg

SHEET: CW-A1-WND (11/2002)

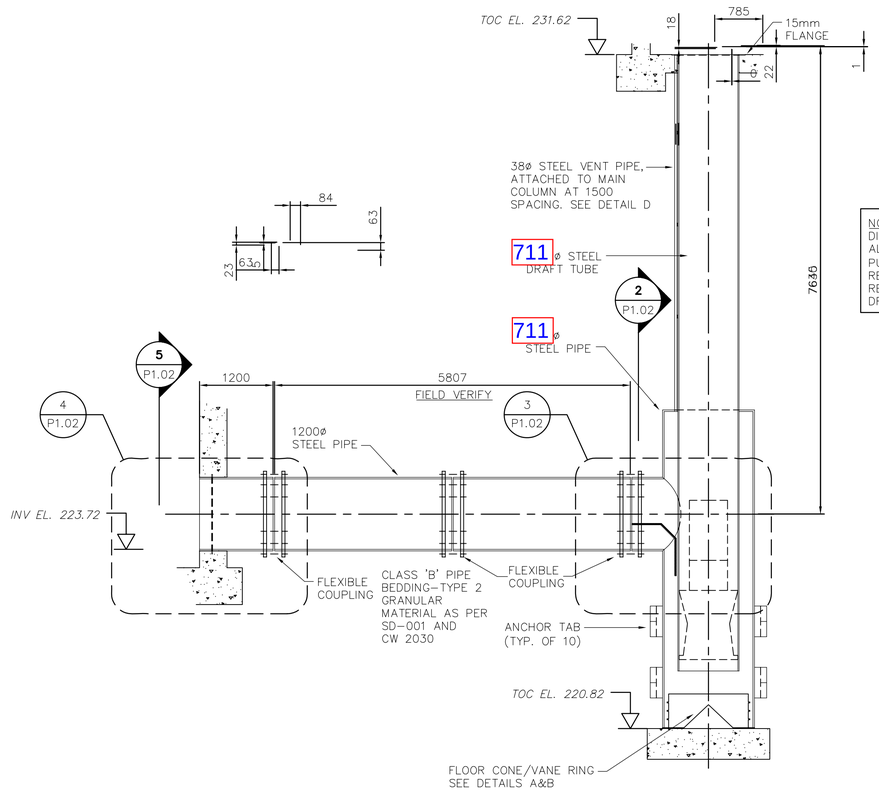

NOTE: DRAFT TUBE DIAMETER MAY BE ALTERED TO SUIT THE PUMP MANUFACTURER'S REQUIREMENTS. REFER TO SHOP DRAWINGS.

1 P1.02 DETAIL
SCALE 1:50

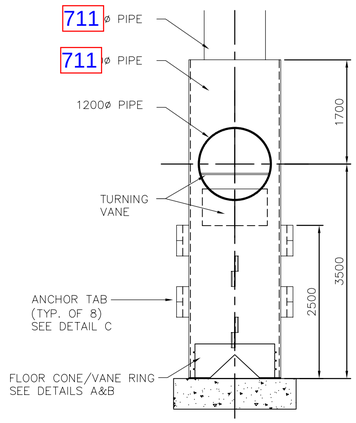

2 P1.02 SECTION
SCALE 1:50

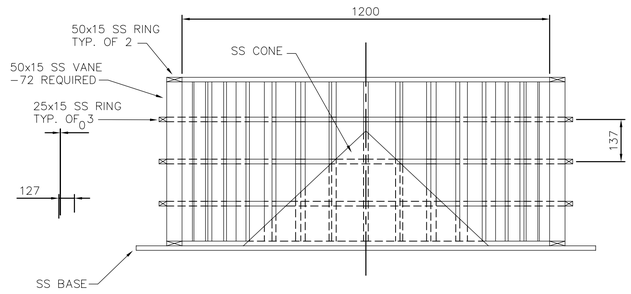

A P1.02 FLOOR CONE/VANE RING DETAIL – SECTION
SCALE 1:10

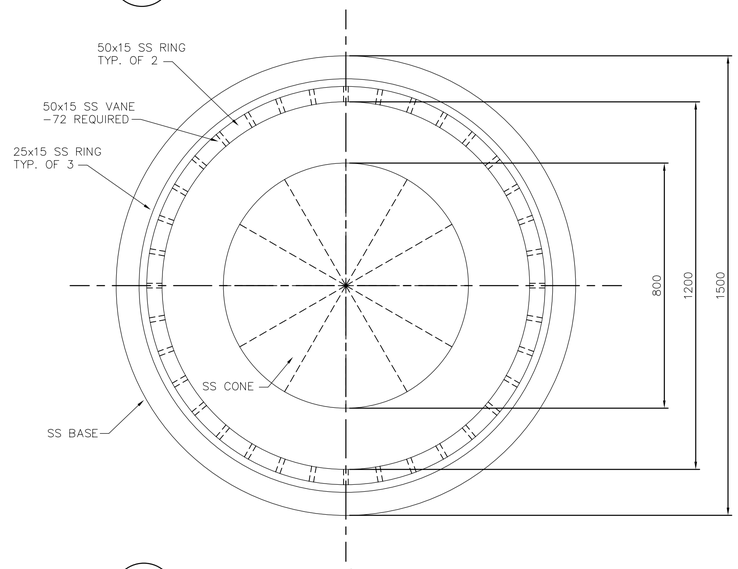

B P1.02 FLOOR CONE/VANE RING DETAIL – PLAN
SCALE 1:10

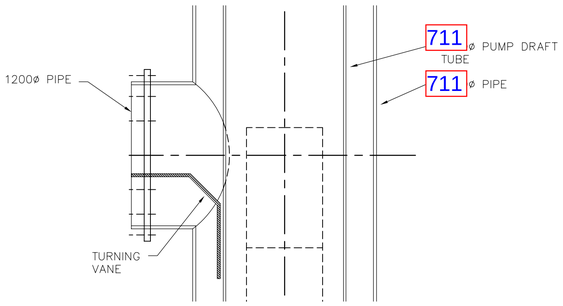

3 P1.02 DETAIL
SCALE 1:25

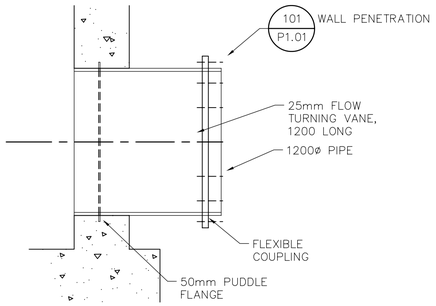

4 P1.02 DETAIL
SCALE 1:25

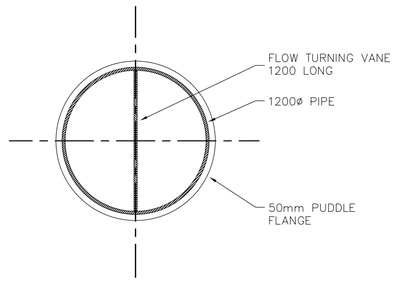

5 P1.02 SECTION
SCALE 1:25

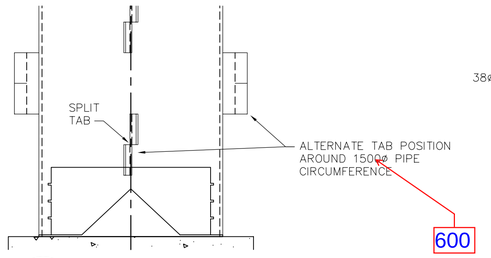

C P1.02 ANCHOR TAB DETAIL
SCALE 1:50

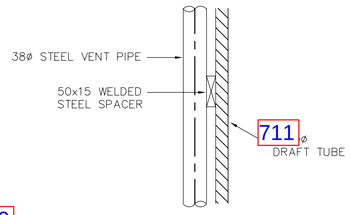

D P1.02 VENT PIPE ATTACHMENT
SCALE 1:5

NOTES

1. MATERIALS: CARBON STEEL, GRADE TO BE DETERMINED BY PUMP MANUFACTURER
2. COATING AND FINISH AS SPECIFICATION SECTION 11901
3. DIMENSION SHOWN TO CONCRETE STRUCTURES ARE FIXED, PIPE THICKNESS TO BE DETERMINED BY THE CONTRACTOR.
4. PUMPS, DRAFT TUBES, INTERCONNECTING PIPES AND COUPLINGS PROVIDED BY THE CONTRACTOR, INSTALLED BY THE INSTALLATION CONTRACTOR.

AECOM

As of January 3, 2009, EarthTech became AECOM Canada Ltd.

APEGM
Certificate of Authorization
AECOM Canada Ltd.
Original dated on:
No. 4671 Date: 2005/02/18

AECOM AS - CONSTRUCTED
SIG..... DATE.....

NO.	REVISIONS	DATE	BY
02	AS–CONSTRUCTED DRAWING	08/10/16	RJH
01	ISSUED FOR CONSTRUCTION	05/06/08	GLG
00	ISSUED FOR TENDER	22/03/05	JEH

B.M. ELEV.

EARTH TECH
Earth Tech (Canada) Inc. Winnipeg, Manitoba 204.477.5381

DESIGNED BY	HH	CHECKED BY	HH
DRAWN BY	KJW	APPROVED BY	JEH
HOR. SCALE:	AS NOTED	RELEASED FOR CONSTRUCTION BY:	D. GIBSON
VERTICAL SCALE:	AS NOTED		
DATE	2005/03/22	DATE	2005–03–22

ENGINEER'S SEAL
ORIGINAL SIGNED BY
J.E. HUTCHISON
MAR. 22/05

CONSULTANT DRAWING NO.
66303D–CP1.05

THE CITY OF WINNIPEG
Winnipeg WATER AND WASTE DEPARTMENT

NEWPCC - SECONDARY EFFLUENT UV DISINFECTION FACILITY

PROCESS
AXIAL FLOW PUMP OUTLINE
GENERAL ARRANGEMENT AND DETAILS

CITY FILE NUMBER
SHEET OF
CITY DRAWING NUMBER
1–0101U–P0005–001–02

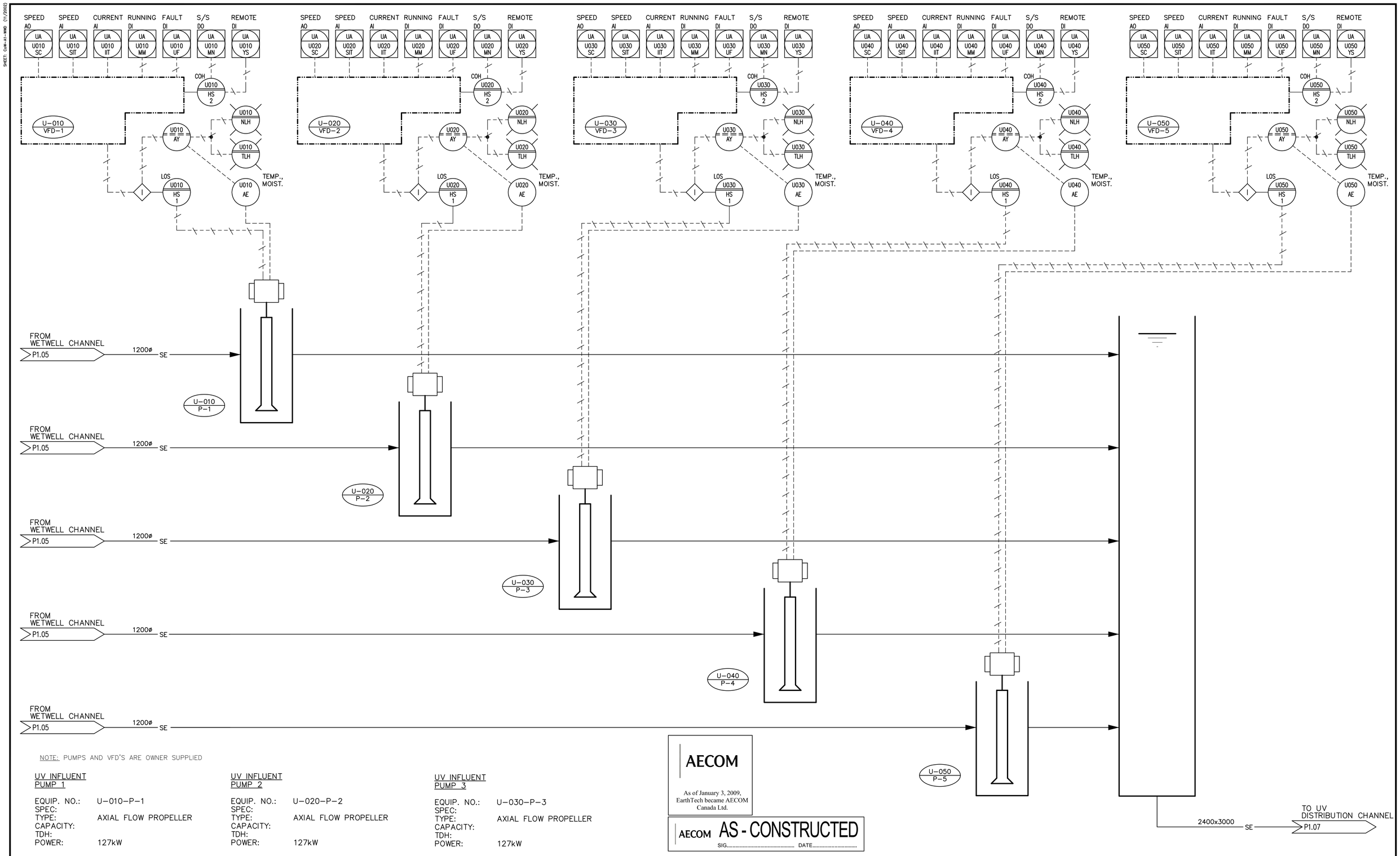

NOTE: PUMPS AND VFD'S ARE OWNER SUPPLIED

UV INFLUENT PUMP 1

EQUIP. NO.: U-010-P-1
SPEC:
TYPE: AXIAL FLOW PROPELLER
CAPACITY:
TDH:
POWER: 127kW

UV INFLUENT PUMP 2

EQUIP. NO.: U-020-P-2
SPEC:
TYPE: AXIAL FLOW PROPELLER
CAPACITY:
TDH:
POWER: 127kW

UV INFLUENT PUMP 3

EQUIP. NO.: U-030-P-3
SPEC:
TYPE: AXIAL FLOW PROPELLER
CAPACITY:
TDH:
POWER: 127kW

UV INFLUENT PUMP 4

EQUIP. NO.: U-040-P-4
SPEC:
TYPE: AXIAL FLOW PROPELLER
CAPACITY:
TDH:
POWER: 127kW

UV INFLUENT PUMP 5

EQUIP. NO.: U-050-P-5
SPEC:
TYPE: AXIAL FLOW PROPELLER
CAPACITY:
TDH:
POWER: 127kW

AECOM

As of January 3, 2009, EarthTech became AECOM Canada Ltd.

AECOM AS-CONSTRUCTED
SIG..... DATE.....

APEGM
Certificate of Authorization
AECOM Canada Ltd.
Original dated on:
No. 4671 Date: 2005/02/18

B.M.
ELEV.

NO.	REVISIONS	DATE	BY
02	AS-CONSTRUCTED DRAWING	08/10/16	RJH
01	ISSUED FOR CONSTRUCTION	05/06/08	GLG
00	ISSUED FOR TENDER	05/02/18	JEH

EARTH TECH
Earth Tech (Canada) Inc. Winnipeg, Manitoba 204.477.5381

DESIGNED BY CGL
CHECKED BY DT
DRAWN BY KJW
APPROVED BY DT
HOR. SCALE:
VERTICAL SCALE:
RELEASED FOR CONSTRUCTION BY: T. KJARTANSON
DATE 2004/11/03
DATE 2005-02-18

ENGINEER'S SEAL
ORIGINAL SIGNED BY
D.J. TANIGUCHI
FEB. 18/05

CONSULTANT DRAWING NO.
66303D-CP1.06

Winnipeg
THE CITY OF WINNIPEG
WATER AND WASTE DEPARTMENT

NEWPCC - SECONDARY EFFLUENT
UV DISINFECTION FACILITY

PROCESS
UV INFLUENT PUMPS

CITY FILE NUMBER
SHEET OF
CITY DRAWING NUMBER
1-0101U-P0006-001-02

SHEET: CW-A1-WND (1/2002)

Jul 28, 2009 - 1:59pm PLOTTED BY: reg.hall LAYOUT:Layout1 FILE:L:\work\66000\66303Dis\02a-CAD\ALL\SUBMISSION\As Built-Record\As-Constructed DWG\1-0101U-P0006-001-02D.dwg

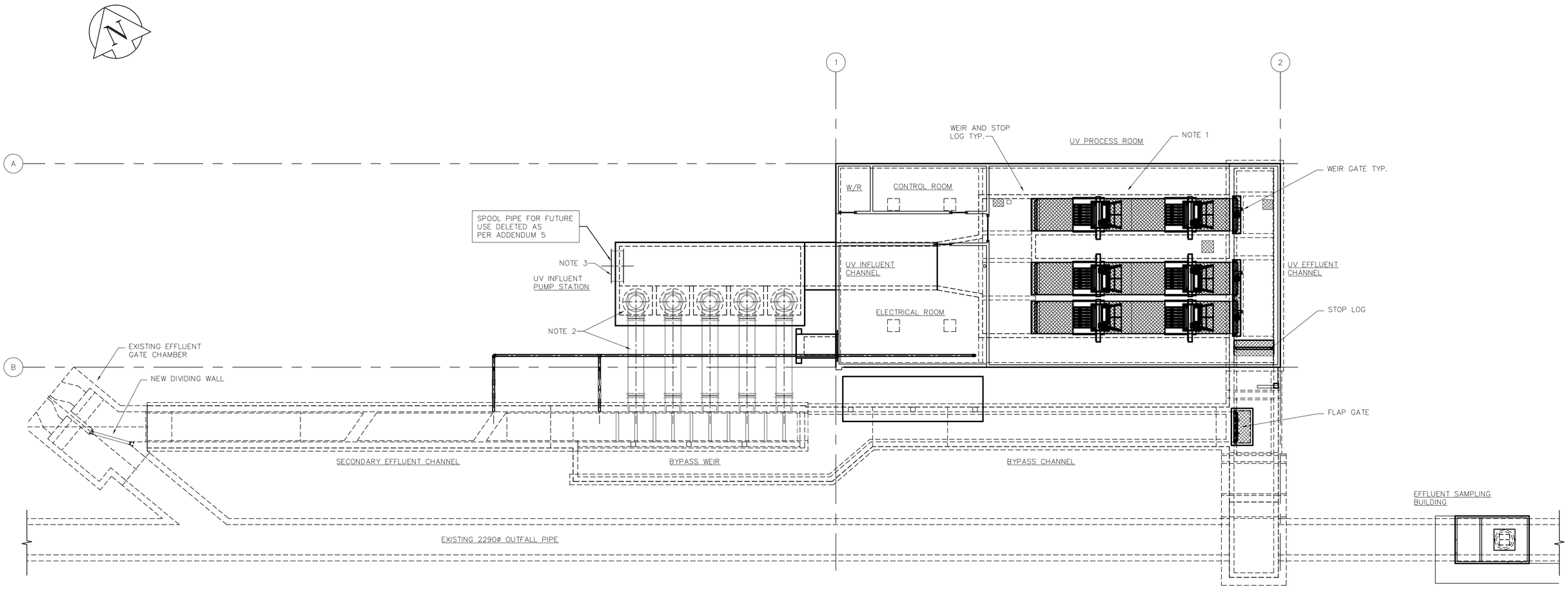

GENERAL ARRANGEMENT

SCALE 1:150

NOTES

1. UV MODULES PROVIDED BY CITY, INSTALLED BY CONTRACTOR.
2. SEE PUMP GENERAL ARRANGEMENT DRAWING CP1.05 AND MANUFACTURER'S DETAILS. PUMPS, INTERCONNECTING PIPING AND COUPLINGS SUPPLIED BY CITY, INSTALLED BY CONTRACTOR.
3. 2230ø BLIND SPOOL FOR FUTURE EXPANSION PROVIDED AND INSTALLED BY CONTRACTOR.

SPOOL PIPE FOR FUTURE USE DELETED AS PER ADDENDUM 5

AECOM

As of January 3, 2009, EarthTech became AECOM Canada Ltd.

AECOM AS - CONSTRUCTED

SIG..... DATE.....

APEGM

Certificate of Authorization

AECOM Canada Ltd.

Original dated on:

No. 4671 Date: 2005/02/18

NO.	REVISIONS	DATE	BY
02	AS-CONSTRUCTED DRAWING	08/10/16	RJH
01	ISSUED FOR CONSTRUCTION	05/06/08	GLG
00	ISSUED FOR TENDER	05/02/18	JEH

B.M. ELEV.

EARTH TECH

Earth Tech (Canada) Inc. Winnipeg, Manitoba 204.477.5381

DESIGNED BY	CGL	CHECKED BY	HSH
DRAWN BY	KJW	APPROVED BY	DT
HOR. SCALE: VERTICAL SCALE:		RELEASED FOR CONSTRUCTION BY:	T. KJARTANSON
DATE	2004/11/03	DATE	2005-02-18

ENGINEER'S SEAL

ORIGINAL SIGNED BY

D.J. TANIGUCHI

FEB. 18/05

CONSULTANT DRAWING NO.

66303D-CP2.01

Winnipeg

THE CITY OF WINNIPEG

WATER AND WASTE DEPARTMENT

NEWPCC - SECONDARY EFFLUENT UV DISINFECTION FACILITY

PROCESS PUMP STATION & UV PLAN

CITY FILE NUMBER

SHEET OF

CITY DRAWING NUMBER

1-0101U-P0022-001-02

SHEET: CW-A1-WWD (11/2002)

Jul 28, 2009 - 2:40pm PLOTTED BY: reg.hall LAYOUT:Layout1 FILE:L:\work\66000\66303Dis\02a-CAD\ALL\SUBMISSION\As Built-Record\As-Constructed DWG\1-0101U-P0022-001-02D.dwg

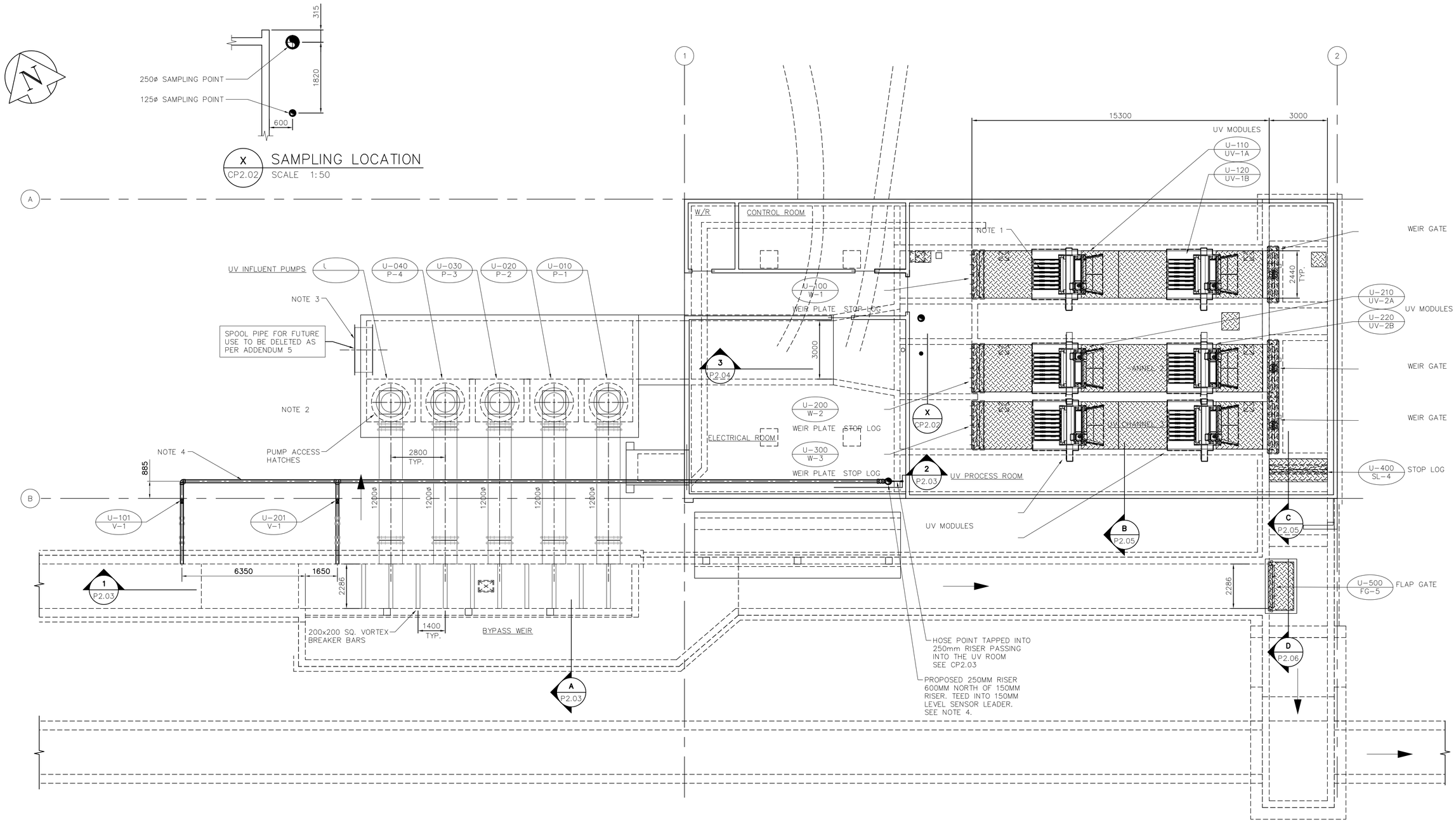

PLAN
SCALE 1:100

NOTES

1. UV MODULES PROVIDED BY CITY, INSTALLED BY CONTRACTOR.
2. SEE PUMP GENERAL ARRANGEMENT DRAWING CP1.05 AND MANUFACTURER'S DETAILS. PUMPS, INTERCONNECTING PIPING AND COUPLINGS SUPPLIED BY CITY, INSTALLED BY CONTRACTOR.
3. REFER TO SECTION 11055 FOR PIPE SPOOL SPECIFICATION
4. LEVEL SENSOR PIPING SHALL BE 150 mm PVC C900 CONSTRUCTED IN ACCORDANCE WITH CITY OF WINNIPEG STANDARD CONSTRUCTION SPECIFICATIONS SPECIFICATION NUMBER CW2110. PIPE SHALL BE BEDDED TO CLASS B BEDDING REQUIREMENTS WITH TYPE 2 MATERIAL AS SPECIFIED IN CW2030. GATE VALVES SHALL BE AWWA C509 CONFORMING TO CW2110. SUPPLY AND INSTALL VALVES BOXES TO CW2110 STANDARD DETAIL SD-016..

SPOOL PIPE FOR FUTURE USE TO BE DELETED AS PER ADDENDUM 5

AECOM

As of January 3, 2009, EarthTech became AECOM Canada Ltd.

AECOM AS-CONSTRUCTED
SIG..... DATE.....

APEGM
Certificate of Authorization
AECOM Canada Ltd.
Original dated on:
No. 4671 Date: 2005/02/18

NO.	REVISIONS	DATE	BY
4	AS-CONSTRUCTED DRAWING	08/10/16	RJH
3	ISSUED FOR CCN 8	05/11/22	SRP
2	ISSUED FOR CCN 7	05/11/01	SRP
1	ISSUED FOR CONSTRUCTION	05/06/08	GLG
0	ISSUED FOR TENDER	05/02/18	JEH

B.M. ELEV.

EARTH TECH
Earth Tech (Canada) Inc. Winnipeg, Manitoba 204.477.5381

DESIGNED BY CGL
CHECKED BY HSH
DRAWN BY KJW
APPROVED BY DT
HOR. SCALE:
VERTICAL SCALE:
RELEASED FOR CONSTRUCTION BY: T. KJARTANSON
DATE 2004/11/03
DATE 2005-02-18

ENGINEER'S SEAL
ORIGINAL SIGNED BY
D.J. TANIGUCHI
FEB. 18/05

CONSULTANT DRAWING NO.
66303D-CP2.02

THE CITY OF WINNIPEG
Winnipeg WATER AND WASTE DEPARTMENT

NEWPCC - SECONDARY EFFLUENT UV DISINFECTION FACILITY

CITY FILE NUMBER
SHEET 2 OF 6

PROCESS
PUMP STATION & UV PLAN

CITY DRAWING NUMBER
1-0101U-P0023-001-04

SHEET: CW-A1-WND (1/2002)

Jul 28, 2009 - 2:42pm PLOTTED BY: reg.hall LAYOUT:Layout1 FILE:L:\work\66000\66303Dia\02a-CAD\ALL\SUBMISSION\As Built-Record\As-Constructed DWG\1-0101U-P0023-001-040.dwg

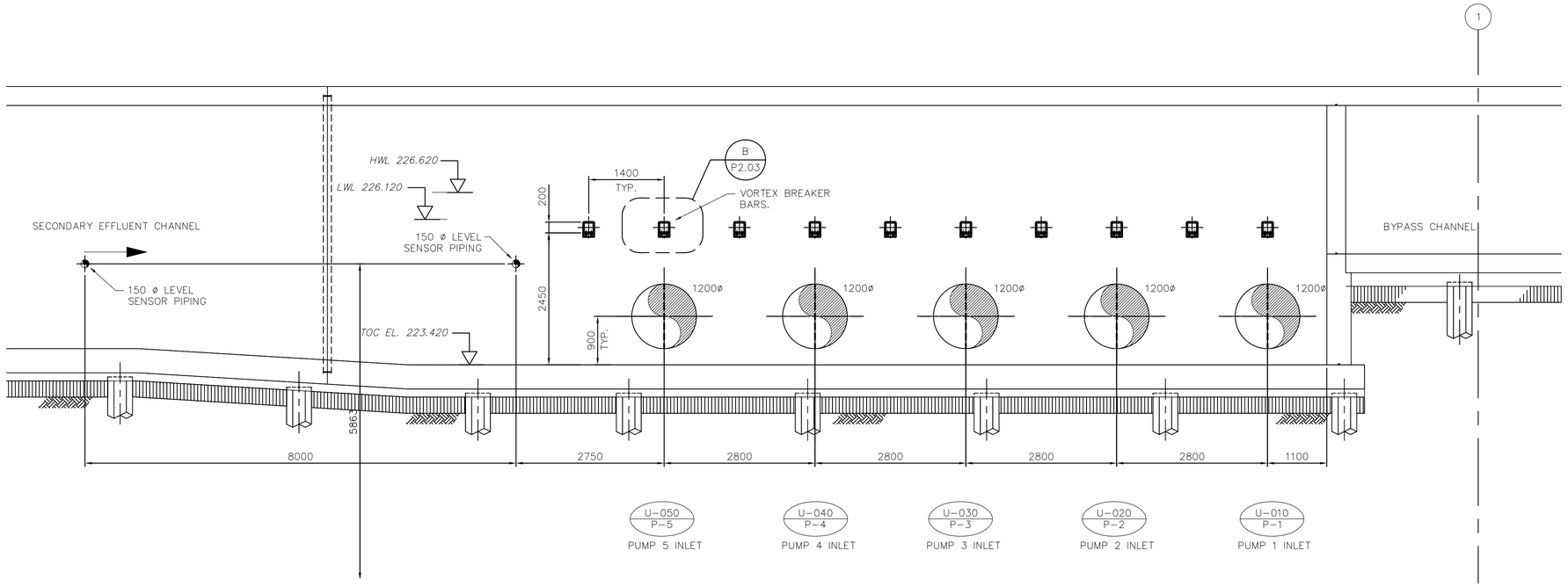

1 P2.02 SECTION
SCALE 1:50

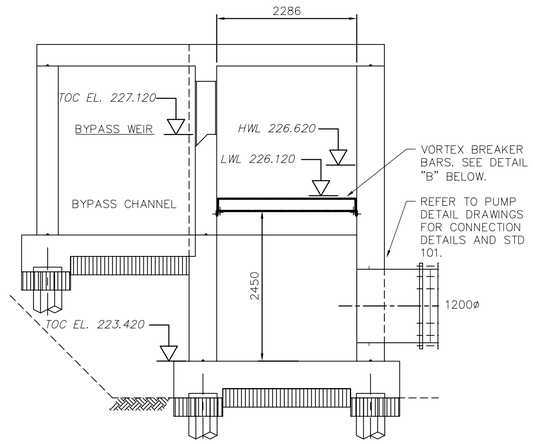

A P2.02 SECTION
SCALE 1:50

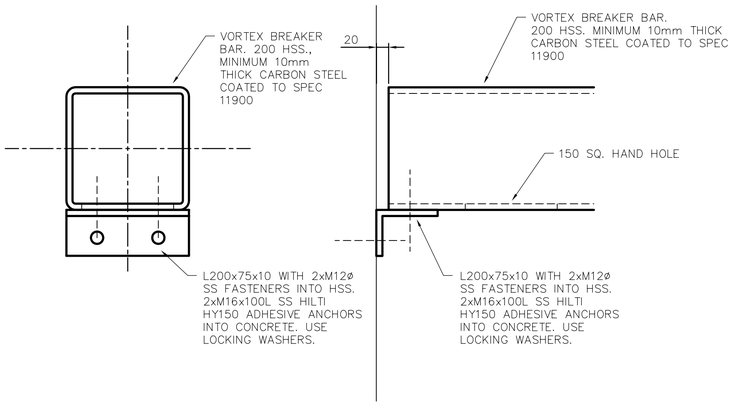

B P2.03 VORTEX BREAKER BAR DETAILS
SCALE 1:5

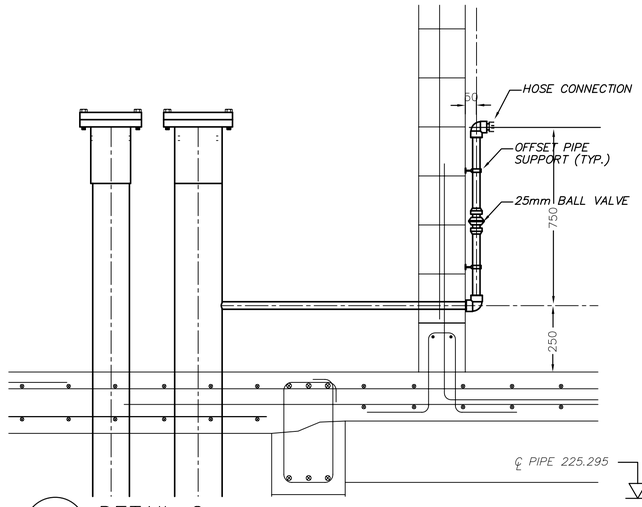

C P2.03 DETAIL C
SCALE N.T.S

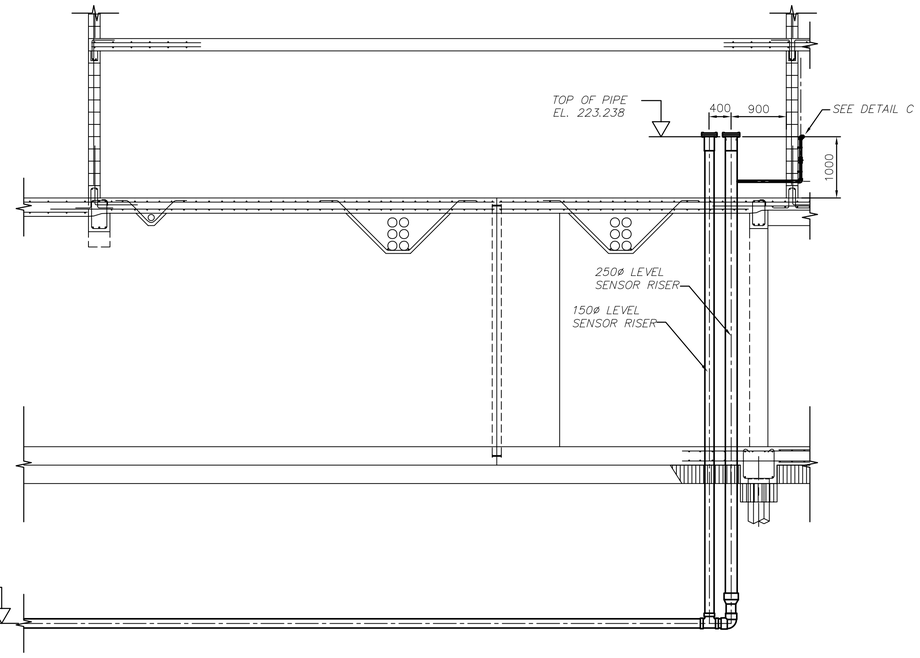

2 P2.02 SECTION
SCALE 1:50

NOTES

1. LEVEL SENSOR RISER PIPE SHALL HAVE ONE CONTINUOUS PIPE 6.0m IN LENGTH RUNNING FROM THE ELBOW UP (i.e. NO PIPE JOINTS IN THE LOWER 6.0m)

AECOM

As of January 3, 2009, EarthTech became AECOM Canada Ltd.

AECOM AS-CONSTRUCTED
SIG..... DATE.....

APEGM
Certificate of Authorization
AECOM Canada Ltd.
Original dated on:
No. 4671 Date: 2005/02/18

NO.	REVISIONS	DATE	BY
02	AS-CONSTRUCTED DRAWING	08/10/16	RJH
01	ISSUED FOR CONSTRUCTION	05/06/08	GLG
00	ISSUED FOR TENDER	05/02/18	JEH

B.M. ELEV.

EARTH TECH
Earth Tech (Canada) Inc. Winnipeg, Manitoba 204.477.5381

DESIGNED BY	CGL	CHECKED BY	HSH
DRAWN BY	KJW	APPROVED BY	DT
HOR. SCALE: VERTICAL SCALE:		RELEASED FOR CONSTRUCTION BY:	T. KJARTANSON
DATE	2004/11/03	DATE	2005-02-18

ENGINEER'S SEAL
ORIGINAL SIGNED BY
D.J. TANIGUCHI
FEB. 18/05

CONSULTANT DRAWING NO.
66303D-CP2.03

Winnipeg THE CITY OF WINNIPEG
WATER AND WASTE DEPARTMENT

NEWPCC - SECONDARY EFFLUENT UV DISINFECTION FACILITY

PROCESS
INFLUENT PUMP INLET SECTIONS AND DETAILS

CITY FILE NUMBER
SHEET OF
CITY DRAWING NUMBER
1-0101U-P0024-001-02

SHEET: CW-A1-WND (11/2002)

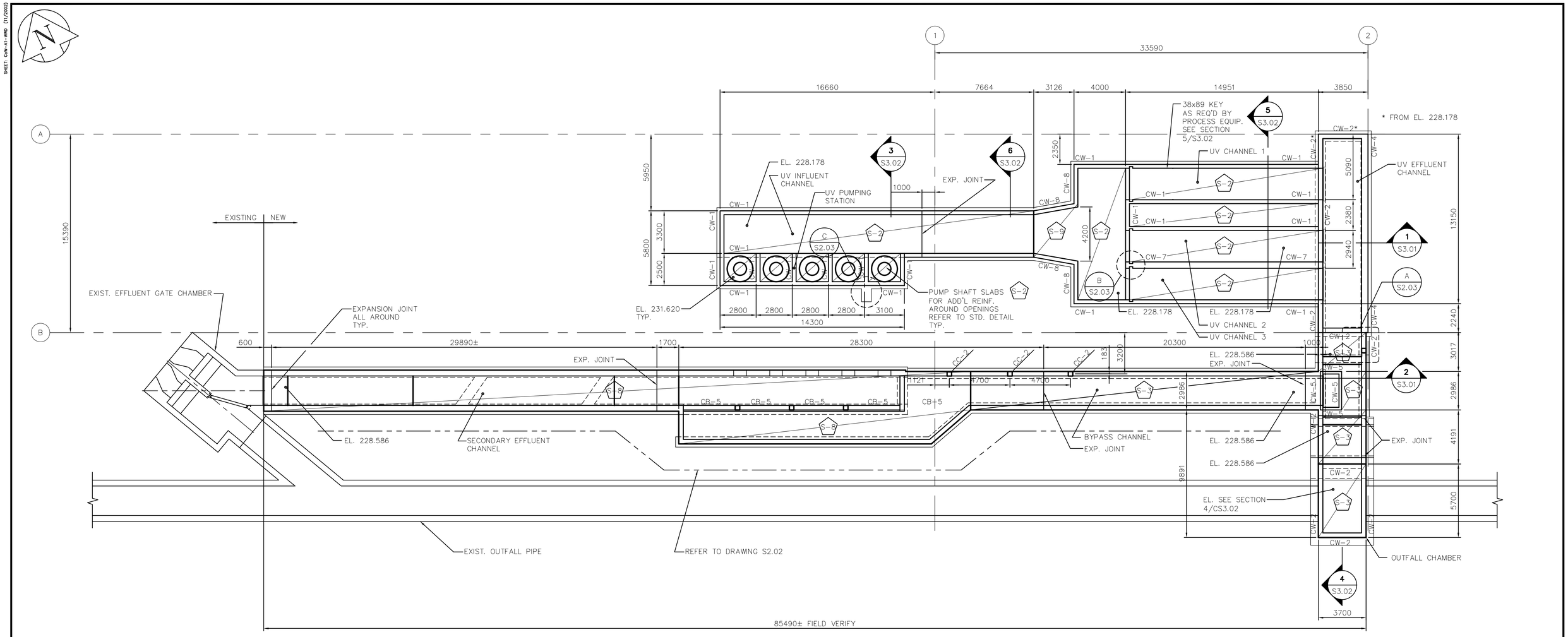

PLAN ABOVE ELEVATION 231.620

SCALE: 1:150

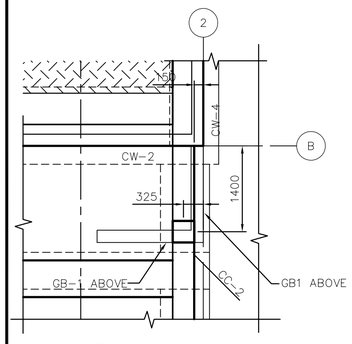

A S2.03 DETAIL 1:50

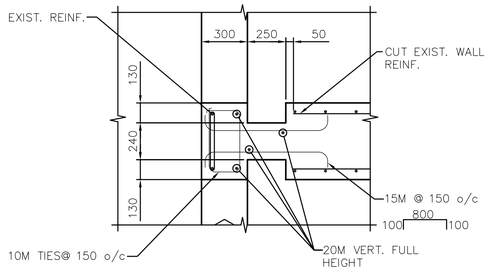

B S2.03 DETAIL 1:20

DETAIL IS FOR BOTH SINGLE AND DOUBLE BLOCK-OUTS.

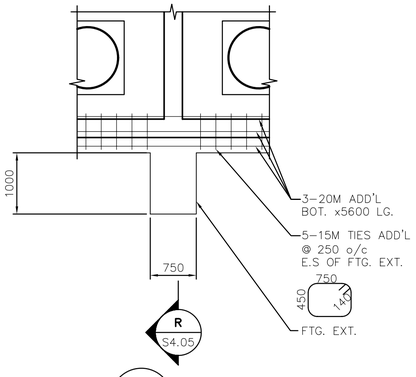

C S2.03 DETAIL 1:50

NOTES:

1. FOR GENERAL NOTES AND SCHEDULES REFER TO DRAWING S1.01.
2. FOR STANDARD DETAILS REFER TO DRAWINGS S4.01, S4.02, AND S4.03.

AECOM

As of January 3, 2009, EarthTech became AECOM Canada Ltd.

AECOM AS-CONSTRUCTED
SIG..... DATE.....

AS BUILT PER
GATEWAY
CONSTRUCTION & ENGINEERING LTD.
MARCH 14/07

APEGM
Certificate of Authorization
AECOM Canada Ltd.
Original dated on:
No. 4671 Date: 2005\02\18

B.M.
ELEV.

NO.	REVISIONS	DATE	BY
3	AS CONSTRUCTED	07/03/14	GC
2	ISSUED FOR CONSTRUCTION	05/06/08	LAE
1	ISSUED FOR ADDENDUM	05/03/04	JEH
0	ISSUED FOR TENDER	05/02/18	JEH

EARTH TECH
Earth Tech (Canada) Inc. Winnipeg, Manitoba 204.477.5381

DESIGNED BY	RE, MK	CHECKED BY	GGP
DRAWN BY	C.T.	APPROVED BY	DT
HOR. SCALE:	AS NOTED	RELEASED FOR CONSTRUCTION BY:	T. KJARTANSON
VERTICAL SCALE:	AS NOTED		
DATE	2004/11/04	DATE	2005-02-18

ENGINEER'S SEAL
ORIGINAL SIGNED BY
R.B. ERIC
FEB. 18/05

CONSULTANT DRAWING NO.
66303D-S2.03

THE CITY OF WINNIPEG
Winnipeg WATER AND WASTE DEPARTMENT

NEWPCC - SECONDARY EFFLUENT UV DISINFECTION FACILITY

STRUCTURAL
PLAN ABOVE ELEVATION 231.620

CITY FILE NUMBER
SHEET 4 OF 19
CITY DRAWING NUMBER
1-0101U-S0004-001-03

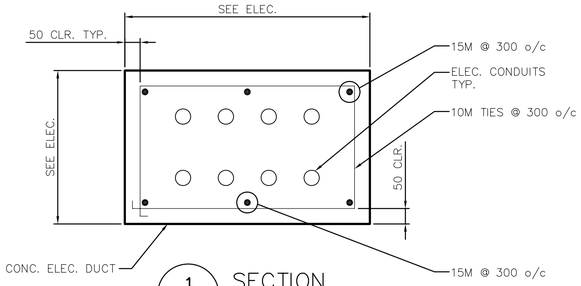

1 S2.04 SECTION
SCALE 1:10

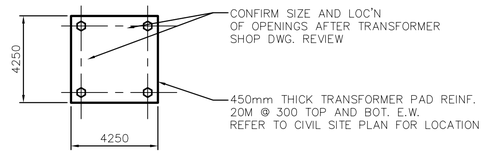

PLAN

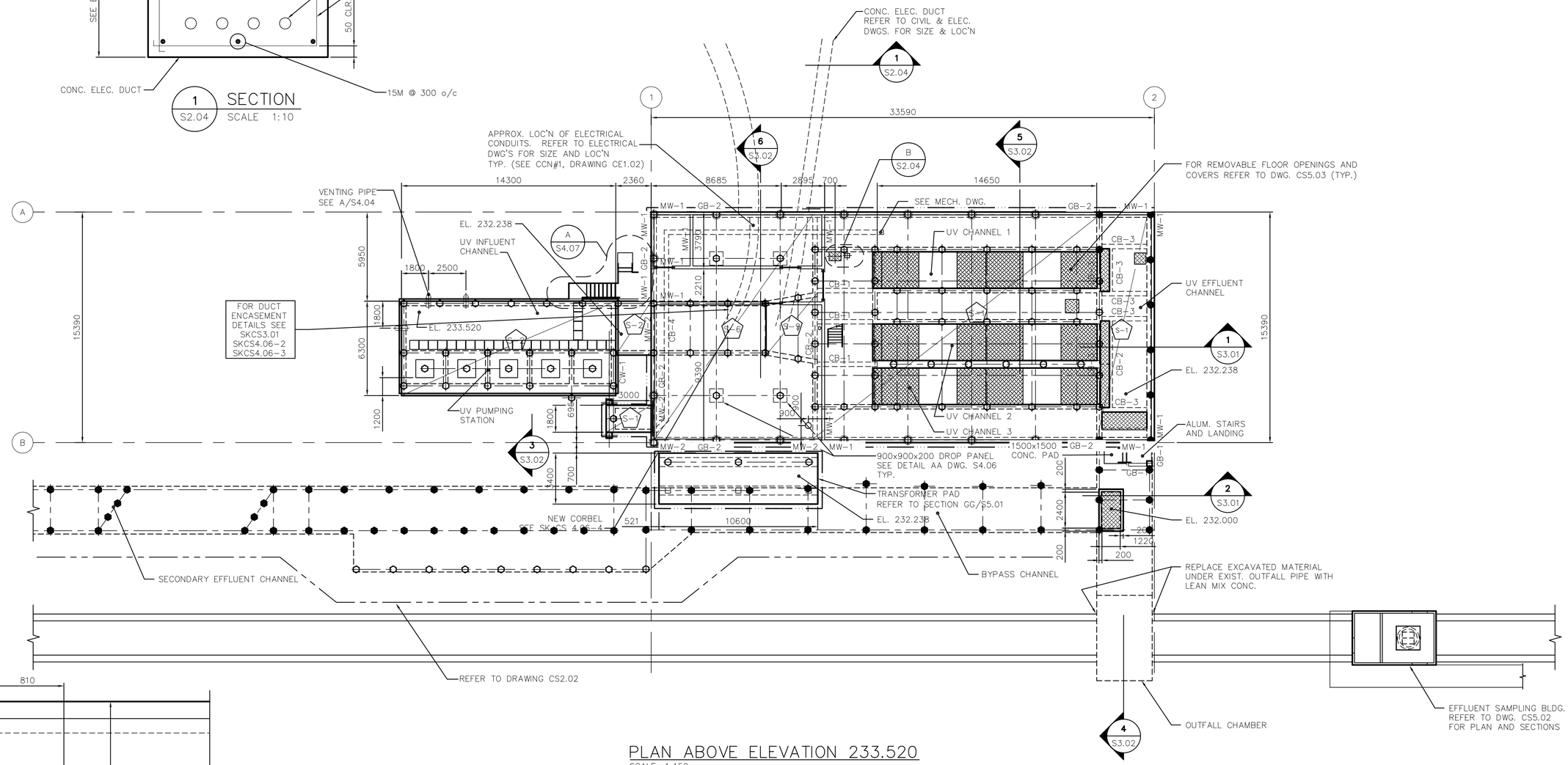

PLAN ABOVE ELEVATION 233.520
SCALE: 1:150

—··— EXTENT OF VOID SUPPORT DETAIL

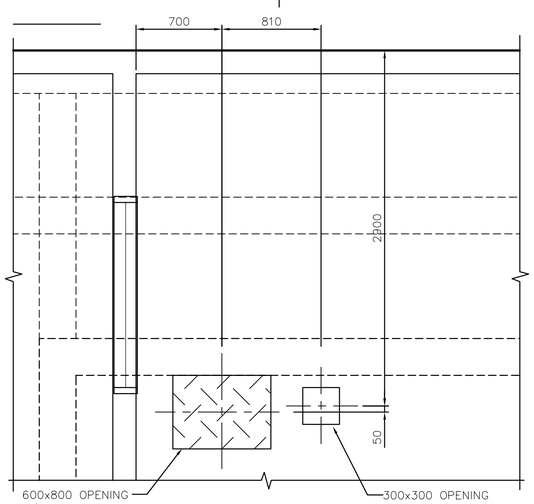

B S2.04 DETAIL
SCALE 1:25

AECOM

As of January 3, 2009, EarthTech became AECOM Canada Ltd.

AECOM AS-CONSTRUCTED
SIG..... DATE.....

NOTES:

1. FOR GENERAL NOTES AND SCHEDULES REFER TO DRAWING S1.01.
2. FOR STANDARD DETAILS REFER TO DRAWINGS S4.01, S4.02, AND S4.03.

AS BUILT PER
GATEWAY
CONSTRUCTION & ENGINEERING LTD.
MARCH 14/07

APEGM
Certificate of Authorization
AECOM Canada Ltd.
Original dated on:
No. 4671 Date: 2005\02\18

NO.	REVISIONS	DATE	BY
3	AS BUILT	07/03/14	
2	ISSUED FOR CONSTRUCTION	05/06/08	LAE
1	ISSUED FOR ADDENDUM 1	05/03/04	JEH
0	ISSUED FOR TENDER	05/02/18	JEH

B.M. ELEV.

EARTH TECH
Earth Tech (Canada) Inc. Winnipeg, Manitoba 204.477.5381

DESIGNED BY	RE, MK	CHECKED BY	GGP
DRAWN BY	C.T.	APPROVED BY	DT
HOR. SCALE:	AS NOTED	RELEASED FOR CONSTRUCTION BY:	
VERTICAL SCALE:	AS NOTED	T. KJARTANSON	
DATE	2004/11/04	DATE	2005-02-18

ENGINEER'S SEAL
ORIGINAL SIGNED BY
R.B. ERIC
FEB. 18/05

CONSULTANT DRAWING NO.
66303D-S2.04

Winnipeg THE CITY OF WINNIPEG
WATER AND WASTE DEPARTMENT

NEWPCC - SECONDARY EFFLUENT
UV DISINFECTION FACILITY

STRUCTURAL
PLAN ABOVE ELEVATION 233.520

CITY FILE NUMBER
SHEET 5 OF 19
CITY DRAWING NUMBER
1-0101U-S0005-001-03

SHEET: CW-A1-WND (11/2002)
Jul 28, 2009 - 3:28pm PLOTTED BY: reg.hall LAYOUT:Layout1 FILE:L:\work\66000\66303Dia\02a-CAD\ALL\SUBMISSION\As Built-Record\As-Constructed DWG\1-0101U-S0005-001-03D.dwg

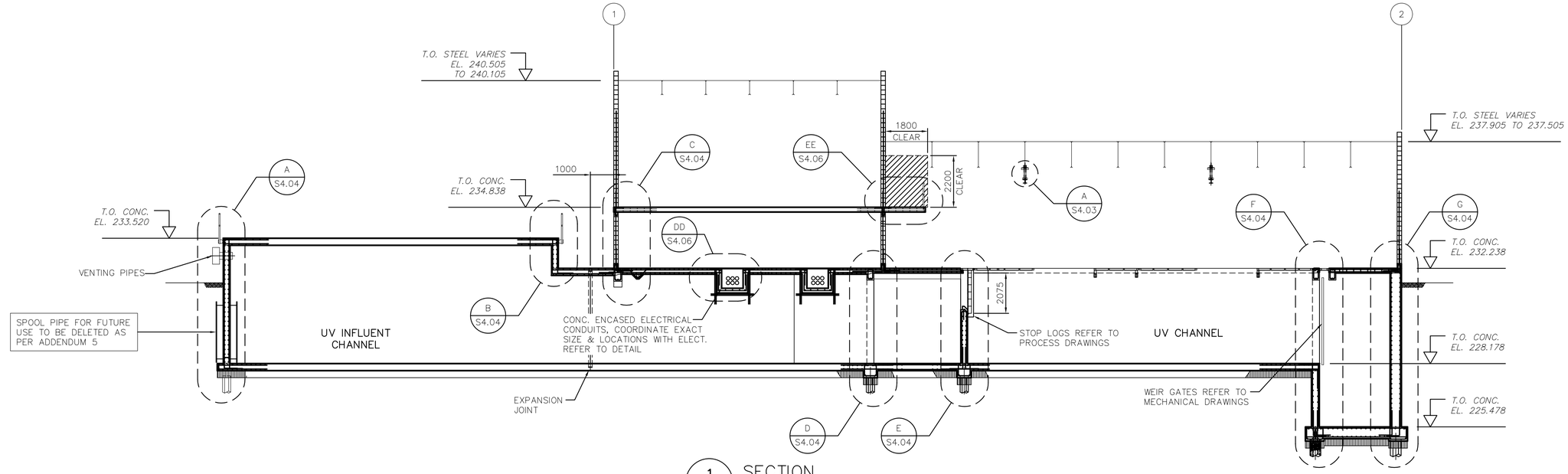

1 S2.02 SECTION
SCALE 1:100

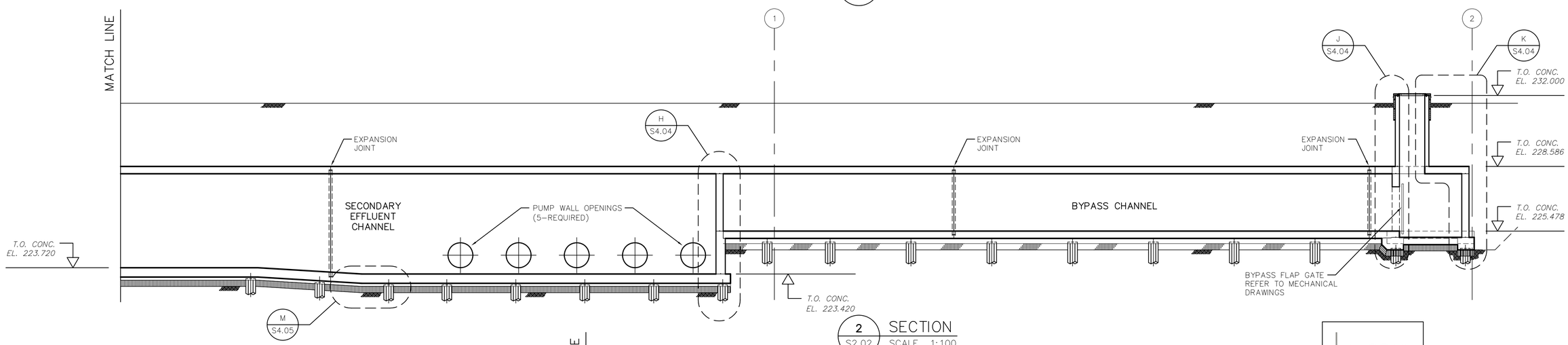

2 S2.02 SECTION
SCALE 1:100

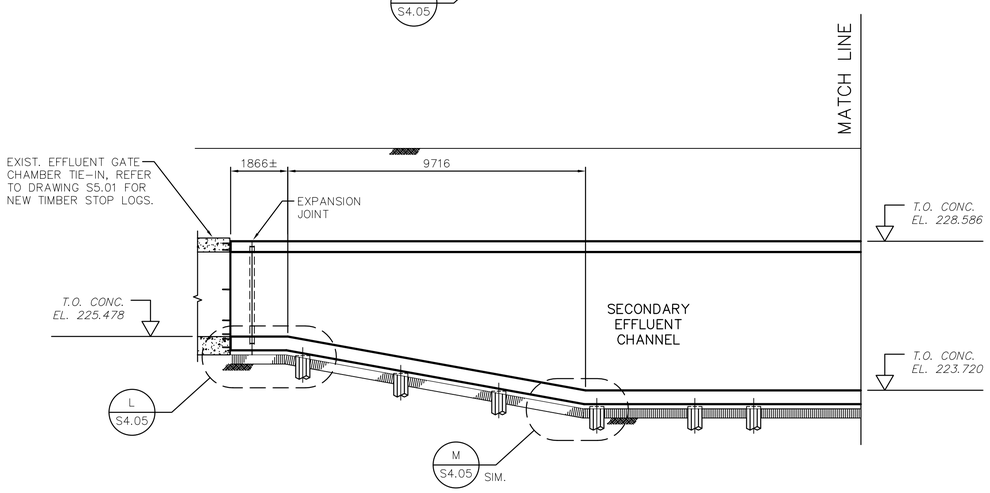

2 S2.02 SECTION
SCALE 1:100

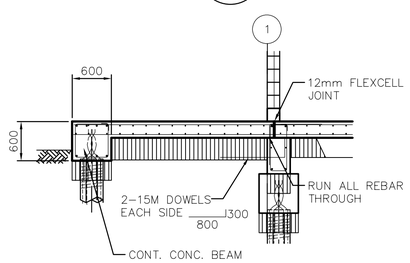

3 S2.04 SECTION
SCALE N.T.S.

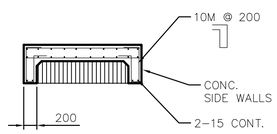

4 S2.04 SECTION
SCALE N.T.S.

AECOM

As of January 3, 2009, EarthTech became AECOM Canada Ltd.

AECOM AS-CONSTRUCTED
SIG..... DATE.....

AS BUILT PER
GATEWAY
CONSTRUCTION & ENGINEERING LTD.
MARCH 14/07

APEGM
Certificate of Authorization
AECOM Canada Ltd.
No. 4671 Original dated on; Date: 2005\02\18

B.M.
ELEV.

NO.	REVISIONS	DATE	BY
3	AS CONSTRUCTED	07/03/14	GC
2	ISSUED FOR CONSTRUCTION	05/06/08	GLG
1	ISSUED FOR ADDENDUM 1	05/03/04	JEH
0	ISSUED FOR TENDER	05/02/18	JEH

EARTH TECH
Earth Tech (Canada) Inc. Winnipeg, Manitoba 204.477.5381

DESIGNED BY	RE, MK	CHECKED BY	GGP
DRAWN BY	C.T.	APPROVED BY	DT
HOR. SCALE:	AS NOTED	RELEASED FOR CONSTRUCTION BY:	T. KJARTANSON
VERTICAL SCALE:	AS NOTED		
DATE	2004/11/04	DATE	2005-02-18

ENGINEER'S SEAL
ORIGINAL SIGNED BY
R.B. ERIC
FEB. 18/05

CONSULTANT DRAWING NO.
66303D-S3.01

Winnipeg
THE CITY OF WINNIPEG
WATER AND WASTE DEPARTMENT

NEWPCC - SECONDARY EFFLUENT
UV DISINFECTION FACILITY

STRUCTURAL
BUILDING SECTIONS
SHEET 1 OF 2

CITY FILE NUMBER
SHEET 1 OF 2
CITY DRAWING NUMBER
1-0101U-S0007-001-03

SHEET: CW-A1-WND (11/2002)

Jul 28, 2009 - 3:38pm PLOTTED BY: reg.hall LAYOUT:Layout1 FILE:L:\work\66000\66303ds\02a-CAD\ALL\SUBMISSION\As Built-Record\As-Constructed DWG\1-0101U-S0007-001-03D.dwg