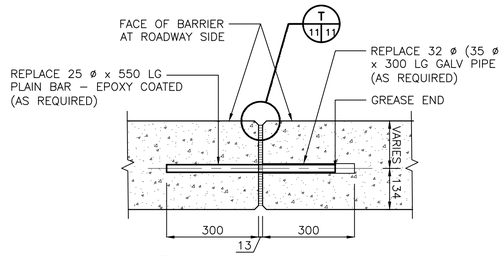

S – 11 EXISTING BARRIER JOINT DETAIL

1:10

NOTES:

CONTRACTOR TO CONFIRM SIZE OF GAP PRIOR TO REMOVING EXISTING MATERIAL FOR REPAIR. REPAIR AREA NOT SHOWN FOR CLARITY

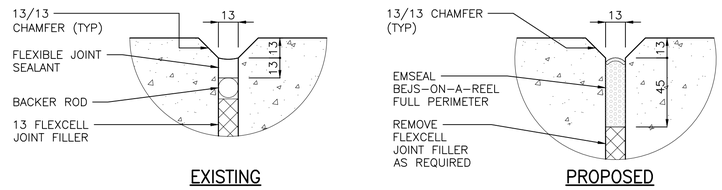

T 11 11 BARRIER JOINT REPAIR DETAIL

1:2

NOTES:

CONTRACTOR TO PROVIDE PROPOSED BARRIER JOINT REPAIR DETAIL IF ANY DIFFERENT FROM EXISTING AS-BUILT DETAIL PRIOR TO REPAIR

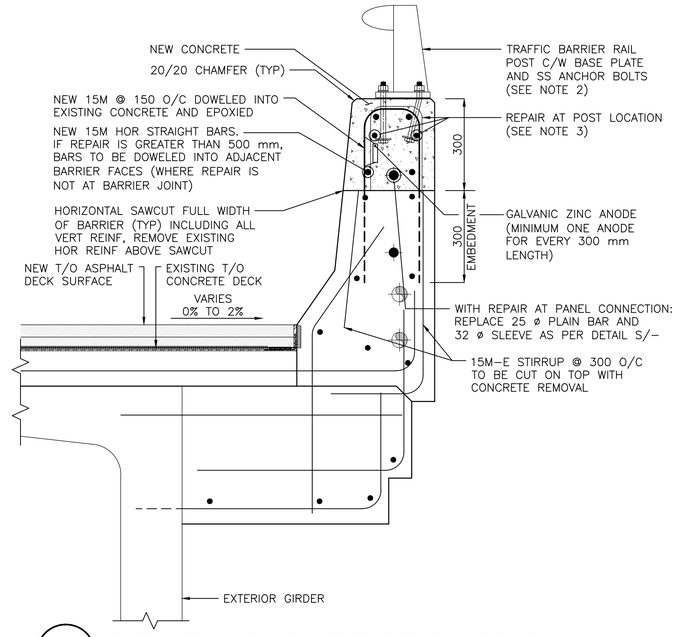

3 – 11 EAST CAST-IN-PLACE BARRIER REPAIR – TYPE 3

1:10

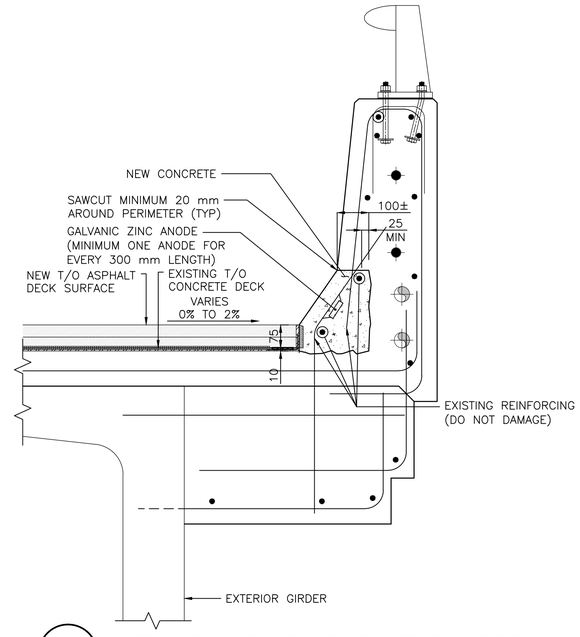

4 – 11 EAST CAST-IN-PLACE BARRIER REPAIR – TYPE 4

1:10

NOTES:

EAST CAST-IN-PLACE BARRIER C/W RAIL:

1. REPAIR TYPE 1B TO BE COMPLETED IN LIEU OF TYPE 1A IF EXISTING REINFORCING STEEL HAS LOST MORE THAN 20% CROSS SECTIONAL AREA DUE TO CORROSION
2. IF BARRIER REPAIR TYPE 1A, 1B, 2 AND 3 OCCURS AT POST LOCATION, CONCRETE REMOVAL SHALL BE DONE WITH GREAT CONSIDERATION OF ANCHOR BOLTS AND BASE PLATE FOR RAIL POST, THEY SHALL NOT BE DAMAGED
3. IF BARRIER REPAIR TYPE 3 OCCURS AT POST LOCATION, CONCRETE REMOVAL SHALL BE DONE WITH GREAT CONSIDERATION OF ANCHOR BOLTS AND BASE PLATE FOR RAIL POST AND ENTIRE POST ASSEMBLY SHALL BE SUPPORTED FOR DURATION OF REPAIR, NEITHER POST ASSEMBLY NOR RAIL SHALL BE DAMAGED

   BARRIER REPAIR TYPE 3 DOES NOT APPLY TO LOCATION WITH LIGHT STANDARD SUPPORT. FOR ALL OTHER BARRIER REPAIR TYPES, ALL REINFORCEMENT FOR LIGHT STANDARD SUPPORT SHALL BE PRESERVED WITHOUT DAMAGE
4. REPAIR TYPE 1B AT POST: REPLACED 1–15M–E EXTRA HOR WITH NEW BAR (600 LG AS PER DETAIL R ON DWG B103–23–10), 5–10M EXTRA TIES AT POST TO BE CUT AND 5–10M L–SHAPE BARS TO BE ADDED, HOR LEG TO BE DOWELED 75 mm AT TOP OF BARRIER AS SHOWN

   REPAIR TYPE 3 AT POST: REPLACED 2–15M–E EXTRA HOR WITH NEW BARS. REPLACED 5–10M EXTRA TIES WITH NEW TIES
5. FOR BARRIER CONNECTION (JOINT) WHERE REPAIR IS APPLICABLE REFER TO DETAILS S AND T
6. TYPE 2 AND TYPE 4 REPAIRS TO BE COMPLETED PRIOR TO INSTALLATION OF WATERPROOFING

WEST PRECAST BARRIER

7. BARRIER REPAIR AREA AND TYPES SHOWN SCHEMATICALLY ON DETAIL 5
8. FOR ALL REPAIR TYPES REFER TO EAST CAST-IN-PLACE BARRIER DETAILS ON DWGS B103–23–10,11 (OPPOSITE HAND, SIMILAR)
9. REPAIR TYPE 2, 3 & 4: REMOVAL OF CONCRETE SHALL BE PROCEEDED WITH CAUTION TO PRESERVE EXISTING REINFORCING AND ANCHORAGE ASSEMBLY INCLUDING HSS ACCESS SLEEVE C/W GASKET AND COVER PLATES (REFER TO DETAIL P ON DWG B103–23–10)
10. FOR BARRIER CONNECTION (JOINT) WHERE REPAIR IS APPLICABLE REFER TO DETAILS Q ON DWG B103–23–10

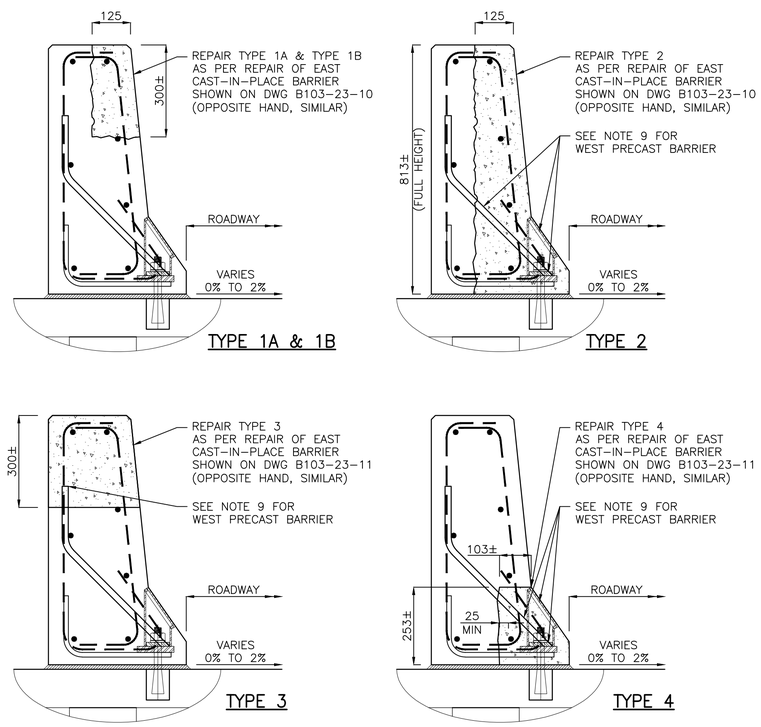

5 – 11 WEST PRECAST BARRIER REPAIR TYPES

1:10

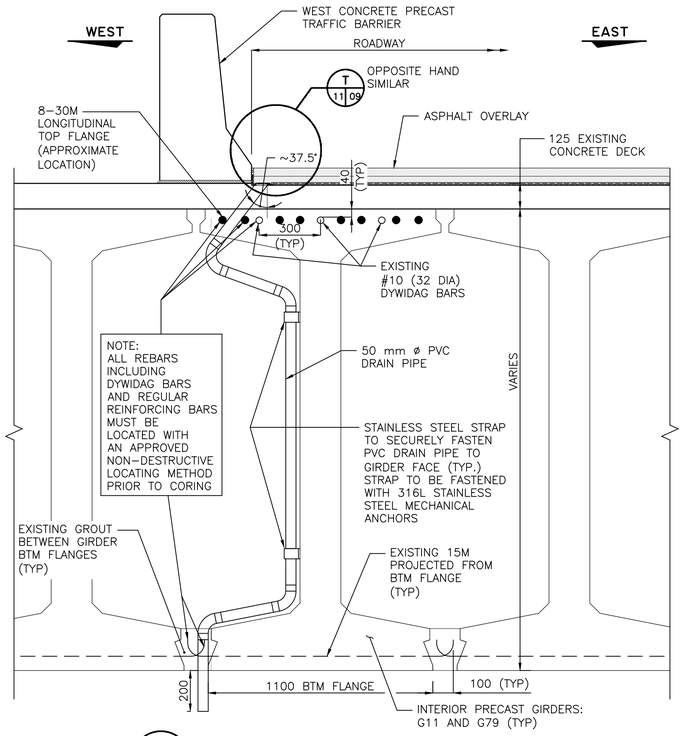

W – 11 SECTION WITH WICK DRAIN DRAINAGE PIPE

1:15

NOTES FOR SECTION T:

1. TYPICAL AT SOUTH–WEST AND NORTH–WEST CORNERS OF DECK AT HEADER. FOR LOCATIONS OF DRAINAGE PIPE REFER TO BRIDGE PLAN ON DWG B103–23–08
2. DIMENSIONS FOR CORING OF DRAIN PIPE AND PVC DRAIN PIPE DIMENSIONS/ANGLES ARE ESTIMATED
3. FOR CORING OF GIRDERS REFER TO NOTE SHOWN ON DETAIL
4. CONTRACTOR SHALL VERIFY ALL FIELD DIMENSIONS PRIOR TO BEGINNING WORK. ANY VARIATION SHALL BE BROUGHT TO THE ATTENTION OF THE CONTRACT ADMINISTRATOR
5. CONTRACTOR TO MAKE NECESSARY ADJUSTMENT TO PVC DRAIN PIPE CONFIGURATION TO ENSURE DRAINAGE PIPE DOES NOT DRAIN ONTO WALKING PATHS BELOW

METRIC

WHOLE NUMBERS INDICATE MILLIMETRES
DECIMALIZED NUMBERS INDICATE METRES

APEGM
Certificate of Authorization
Stantec Consulting Ltd.
No. 1301

B.M. ZONE35 BM27 (CONCRETE FOUNDATION OF PUMP STATION AT NORTH END OF MAIN ST. BRIDGE, WEST SIDE OF MAIN ST.)
ELEV. 232.203

NO.	REVISIONS	DATE	BY
0	ISSUED FOR TENDER	23.02.09	TM

Stantec
500 - 311 Portage Avenue, Winnipeg MB Canada
www.stantec.com

DESIGNED BY	T. MINION	CHECKED BY	J. DAHL
DRAWN BY	M. BUCZYNSKA	APPROVED BY	J. DAHL
HOR. SCALE:	AS NOTED	RELEASED FOR CONSTRUCTION:	
VERTICAL:	AS NOTED		
DATE	9 FEBRUARY 2023	DATE	

ENGINEER'S SEAL
PROVINCE OF MANITOBA
2023-02-06
J.R. DAHL
Member 25442
REGISTERED PROFESSIONAL ENGINEER

CONSULTANT DRAWING NO.
B103-23-11

Winnipeg
THE CITY OF WINNIPEG
PUBLIC WORKS DEPARTMENT
ENGINEERING DIVISION

2023 BRIDGE MAINTENANCE
NORWOOD AND MAIN STREET SB BRIDGE DECK REHABILITATIONS
NORWOOD SB BRIDGE
STRUCTURAL DETAILS - SHEET 4 OF 5

SHEET 11 OF 20
CAD FILE DRAWING NUMBER b103-23-10-11.dwg
CITY DRAWING NUMBER B103-23-11

\\Cgx0045-gsfs01\workgroup\1137\active\113733883\0300_drawing\0302_sheet_files\03_structural\B103-23-10-11.dwg
2023/02/02 7:04 AM By: Buczynska, Malgorzata