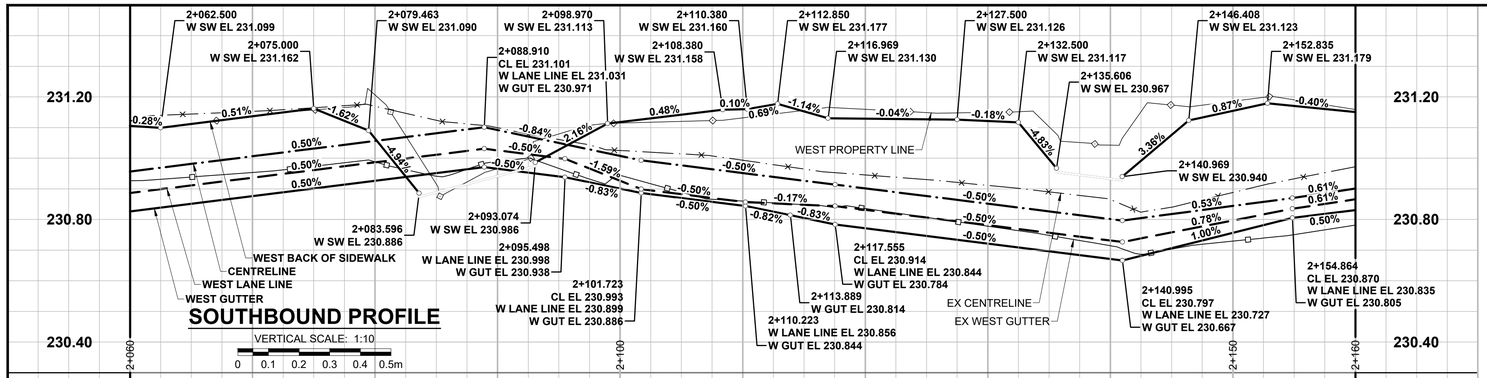

SOUTHBOUND PROFILE

VERTICAL SCALE: 1:10

0 0.1 0.2 0.3 0.4 0.5m

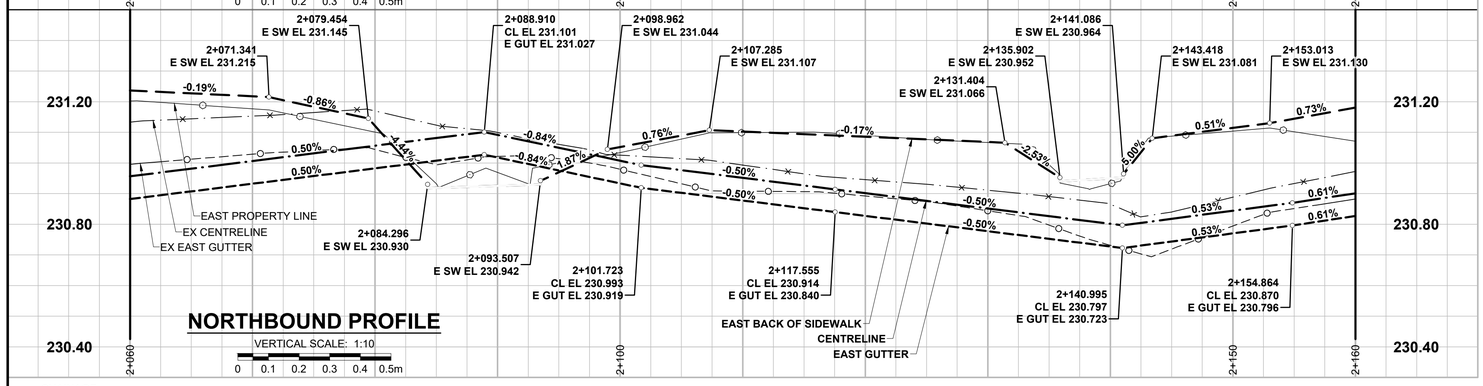

NORTHBOUND PROFILE

VERTICAL SCALE: 1:10

0 0.1 0.2 0.3 0.4 0.5m

NOTES

1. ADJUST MH AND CB RIMS TO NEW GRADES.
2. LAMP STANDARDS, HYDRO POLES, AND ANCHORS THAT REQUIRE TEMPORARY SUPPORT, REMOVAL OR REPLACEMENT, TO BE DONE SO AT THE EXPENSE OF THE CONTRACTOR AS NECESSARY.
3. CONTRACTOR TO REGRADE/RENEW EXISTING PRIVATE SIDEWALKS TO LIMITS AS SHOWN. SIDEWALKS TO BE RENEWED WITH CONCRETE UNLESS NOTED OTHERWISE.
4. CONTRACTOR TO TAKE PRECAUTIONARY STEPS TO PROTECT EXISTING TREES WITHIN THE LIMITS OF CONSTRUCTION FROM DAMAGE FROM CONSTRUCTION ACTIVITIES AS OUTLINED IN THE SPECIFICATIONS.
5. CONTRACTOR TO CONFIRM THE LOCATION OF ALL UTILITIES/SERVICES IN THE FIELD PRIOR TO CONSTRUCTION.
6. CB SD-023 & SD-024 OFFSETS ARE DIMENSIONED TO BOC. CB SD-025 OFFSETS ARE DIMENSIONED O/C. TF-100 OFFSETS ARE DIMENSIONED TO FACE OF CURB.
7. IN GENERAL, PAVEMENT AND SIDEWALK AREAS TO BE REMOVED. MATCH RECONSTRUCTION LIMITS.
8. REFER TO TENDER FOR DETAILS REGARDING TRAFFIC MANAGEMENT.
9. EXISTING LONG WATER SERVICES TO BE INSULATED (SD-018). REFER TO TENDER FOR FURTHER REQUIREMENTS AND AS NOTED IN PLAN.
10. GUTTER INLET FRAME & COVER TF-100.
11. ADD 200.000 m TO ABBREVIATED ELEVATIONS TO OBTAIN GEODETIC ELEVATIONS.

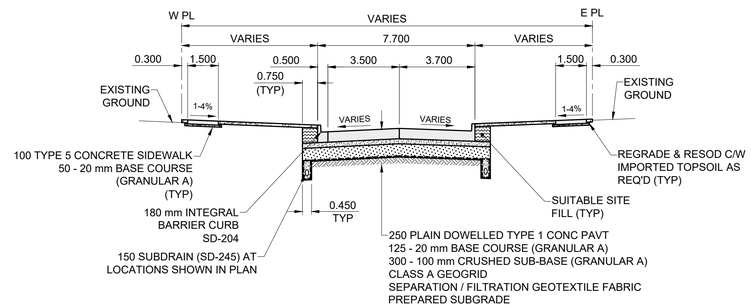

TYPICAL PAVEMENT SECTION 2 LANE

CONCRETE PAVEMENT STRUCTURE

SCALE: NTS

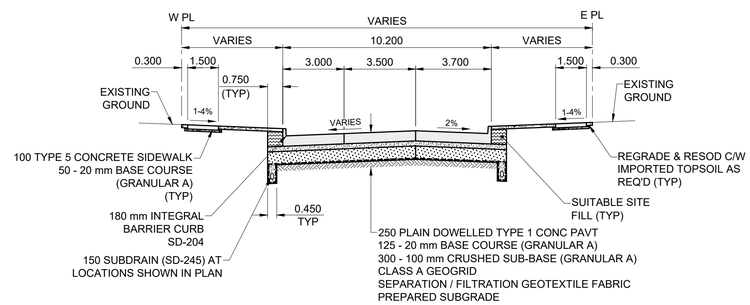

TYPICAL PAVEMENT SECTION 3 LANE

CONCRETE PAVEMENT STRUCTURE

SCALE: NTS

CHAINAGE ALONG ℄ PAVEMENT

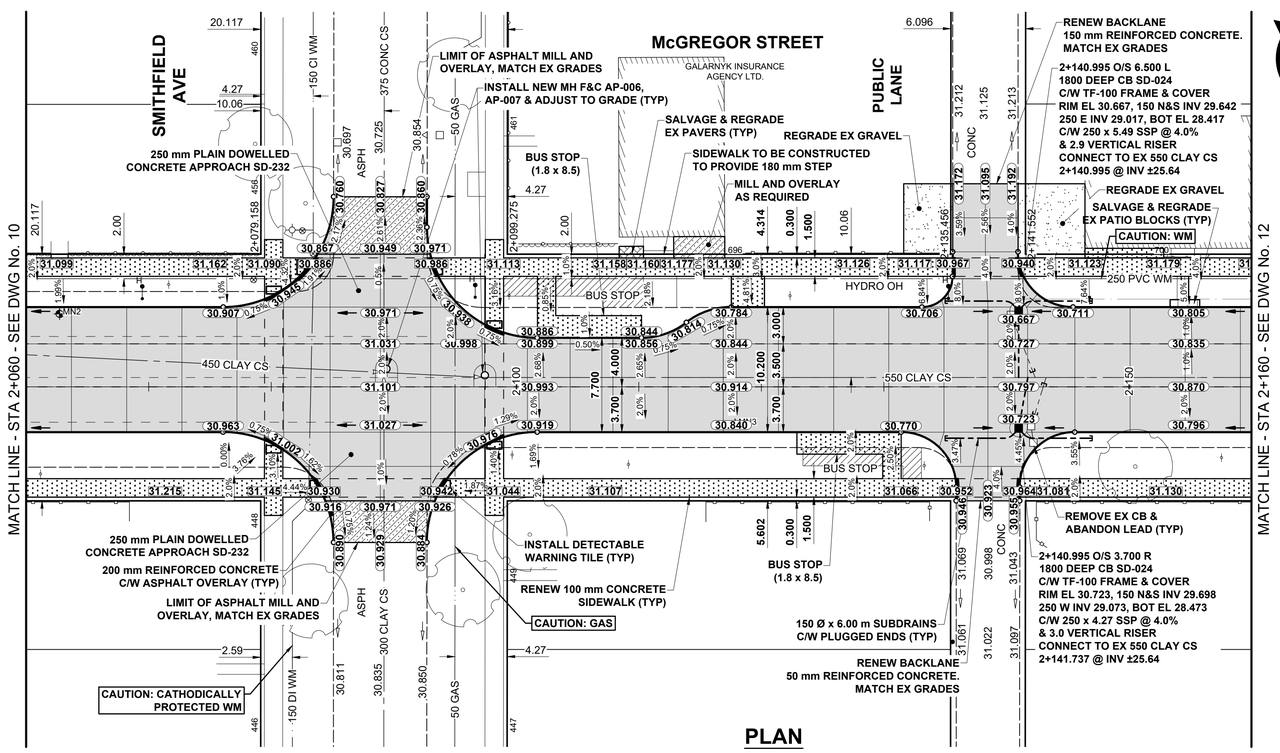

PLAN

SCALE: 1:250

0 5 10 15m

METRIC

WHOLE NUMBERS INDICATE MILLIMETRES
DECIMALIZED NUMBERS INDICATE METRES

ENGINEERS GEOSCIENTISTS MANITOBA
Certificate of Authorization
MORRISON HERSHFIELD
No. 1736

TENDER No. 509-2022

EXISTING	LEGEND - PLAN	NEW	EXISTING	LEGEND - PLAN	NEW	EXISTING	LEGEND - PLAN	NEW
	GAS			MANHOLE			CONCRETE PAVEMENT	
	MTS HANDWELL/PEDESTAL			CATCH BASIN/CATCH PIT			CONC SIDEWALK/MEDIAN	
	HYDRO HANDWELL/CABINET			CURB INLET WITH BOX			ASPHALT PAVEMENT	
	CATV/FIBRE OPTIC			TREE			PAVING STONE	
	TRAFFIC SIGNALS/PIT		TH-12	TEST HOLE			GRAVEL	
	LAND DRAINAGE SEWER			PROPERTY LINE			RAMP CURB	
	SANITARY/COMBINED SEWER			SURVEY BAR			PLANING/REMOVAL	
	CB LEAD/SSP/DCP			FENCE				
	WATERMAIN			BOC/EDGE OF PAVEMENT				
	SUBDRAIN		33.000	ELEVATION	33.333			
	DITCH			TRAFFIC SIGN				

LOCATION APPROVED
UNDERGROUND STRUCTURES

SUPR. U/G STRUCTURES COMMITTEE — DATE

NOTE:
LOCATION OF UNDERGROUND STRUCTURES AS SHOWN ARE BASED ON THE BEST INFORMATION AVAILABLE BUT NO GUARANTEE IS GIVEN THAT ALL EXISTING UTILITIES ARE SHOWN OR THAT THE GIVEN LOCATIONS ARE EXACT. CONFIRMATION OF EXISTENCE AND EXACT LOCATION OF ALL SERVICES MUST BE OBTAINED FROM THE INDIVIDUAL UTILITIES BEFORE PROCEEDING WITH CONSTRUCTION.

BM 25-037 — N.W. Cor. McGregor St. & Smithfield Ave., Tblt. in E. Conc. foundation No. 461 Smithfield Ave., 0.5 m S & 0.2 m below stucco of N.E. Cor. of Bldg.
ELEV 231.320 m

No.	REVISIONS	YY/MM/DD	BY
C	ISSUED FOR TENDER	23/01/05	ACK
B	ISSUED FOR CLIENT REVIEW	22/07/21	ACK
A	ISSUED FOR GEOMETRY REVIEW	22/04/04	ACK

MORRISON HERSHFIELD

DESIGNED BY	ACK	CHECKED BY	GFC
DRAWN BY	KMB	APPROVED BY	RPB
HOR SCALE	1:250	RELEASED FOR CONSTRUCTION	
VERT SCALE	1:10		
DATE	22/04/04	DATE	

PROFESSIONAL'S SEAL
PROVINCE OF MANITOBA — A.C. KAUFMANN — Member 34804 — 2023-01-05 — REGISTERED PROFESSIONAL ENGINEER

CONSULTANT FILE NAME
2102583-McGregor-PP-06.dwg

Winnipeg

THE CITY OF WINNIPEG
PUBLIC WORKS DEPARTMENT
ENGINEERING DIVISION

2022-2023 REGIONAL STREET RENEWAL PROGRAM
McGREGOR STREET RECONSTRUCTION
McADAM AVE TO SEVEN OAKS AVE

CONCRETE RECONSTRUCTION
PAVING AND GRADING
STA 2+060 TO STA 2+160

CITY DRAWING NUMBER: P-3558-11
SHEET 11 OF 13
DRAWING NUMBER: 11

ISO A1 - 594mm x 841mm

x:\Proj\2021\102583\00-2021-2023 mcgregor mountain renewal\09_cad\07 sheets\McGregor\2102583-McGregor-PP-06.dwg Last Saved: 1/3/2023 9:13 AM by KBerard Plotted: 1/5/2023 11:13 AM by Kevin Berard