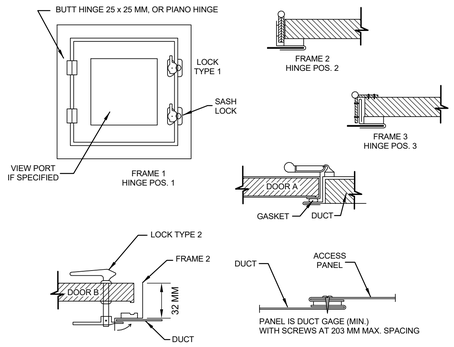

	DOOR SIZE MM	NO. HINGES	NO. LOCKS	METAL GAGE		
				FRAME	DOOR	BACK
500 PA STATIC AND LESS	305 x 305 406 x 508 610 x 610	2 2 3	1-S 2-S 2-S	24 22 22	26 24 22	26 26 26
750 PA STATIC	305 x 305 406 x 508 610 x 610	2 2 3	1-S 1-S,1-T,1-B 2-S,1-T,1-B	22 20 20	22 20 20	26 26 24
1000 PA TO 2500 PA	305 x 305 406 x 508 610 x 610	2 3 3	1-S,1-T,1-B 2-S,1-T,1-B 2-S,2-T,2-B	20 18 18	20 18 18	26 24 24
S = SIDE OPPOSITE HINGES, T = TOP, B = BOTTOM						

DUCT ACCESS DOOR DETAIL

SCALE: N.T.S.

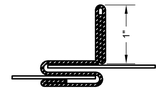

REINFORCED 'S' STRIP (BAR SLIP)

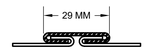

DRIVE SLIP JOINT

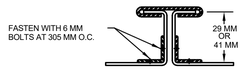

- 38 x 38 x 3 MM ANGLE ONE SIDE ON 1550 MM TO 2300 MM
- 38 x 38 x 3 MM ANGLE BOTH SIDES ON 2300 MM AND WIDER

'T' JOINT

LOW PRESSURE DUCT

MAX. SIDE MM	GAUGE	MAX. LENGTH	TRANSVERSE JOINT	BRACING ANGLE
UP TO 205	26	2388	REINF. 'S' & DRIVE SLIP	NONE
206 TO 610	24	2388	REINF. 'S' & DRIVE SLIP	NONE
611 TO 762	24	1143	29 MM 'T'	NONE
763 TO 1016	22	1143	29 MM 'T'	NONE
1017 TO 1524	22	1118	41 MM 'T'	NONE
1525 TO 2286	20	1118	41 MM 'T'	38 x 38 x 3 MM
2287 & WIDER	18	1118	41 MM 'T'	38 x 38 x 3 MM

- BRACING ANGLE IRON BETWEEN JOINTS

LOW PRESSURE DUCT GAUGE SCHEDULE

SCALE: N.T.S.

OFFSETS 2 AND 3 AND TRANSITIONS MAY HAVE EQUAL ON UNEQUAL INLET AND OUTLET AREAS. TRANSITIONS MAY CONVERT DUCT PROFILES TO ANY COMBINATION FOR RECTANGULAR, ROUND OR FLAT OVAL SHAPES.

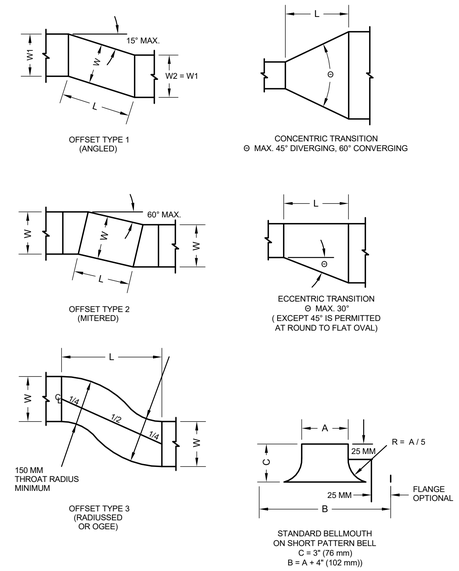

DUCT OFFSETS AND TRANSITIONS DETAILS

SCALE: N.T.S.

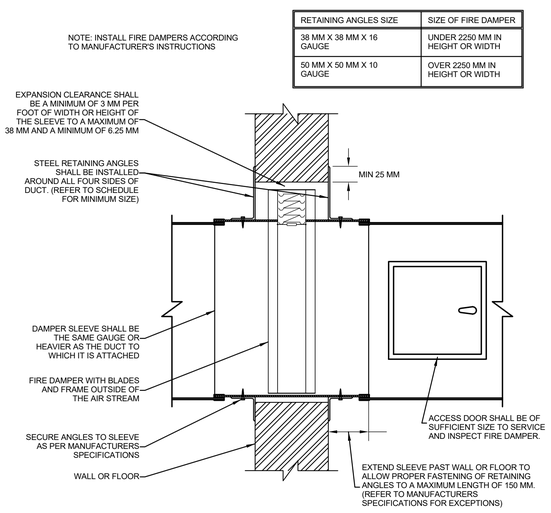

RETAINING ANGLES SIZE	SIZE OF FIRE DAMPER
38 MM X 38 MM X 16 GAUGE	UNDER 2250 MM IN HEIGHT OR WIDTH
50 MM X 50 MM X 10 GAUGE	OVER 2250 MM IN HEIGHT OR WIDTH

TYPE "B" FIRE DAMPER DETAIL

SCALE: N.T.S.

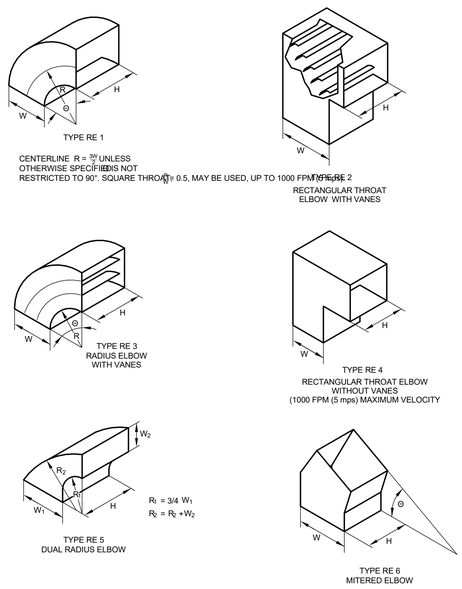

DUCT RECTANGULAR ELBOW DETAILS

SCALE: N.T.S.

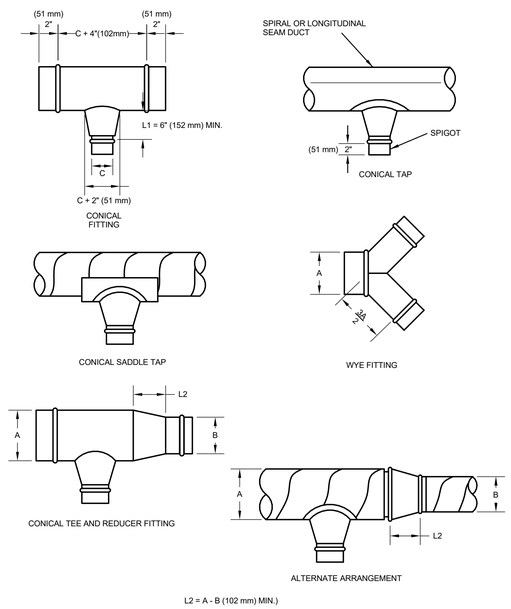

CONICAL TEES

SCALE: N.T.S.

Cibinel Architecture Ltd
560 ACADEMY ROAD WINNIPEG MB R3N 0E3
T. 204 989 8910
ARCHITECT

epp siepman engineering
400 - 136 Market Avenue
Winnipeg, MB R3B 0P4
T 204 453 1080
CONSULTANT

ENGINEERS GEOSCIENTISTS MANITOBA
Certificate of Authorization
Epp Siepman Engineering Inc.
No. 4035

This is a print of a document that has been electronically authenticated with technology authorized by the Engineers Geoscientists Manitoba. The original is in electronic form.

NO.	DATE	REVISION / ISSUANCE
0	2023.02.03	ISSUED FOR CONSTRUCTION

Seal

Project
WFPS STATION 9
1083 AUTUMNWOOD DRIVE

Sheet Title
DETAILS - HVAC

Project No. 22028

Sheet MH4.1

CIBINEL - Arch D - 24" X 36"