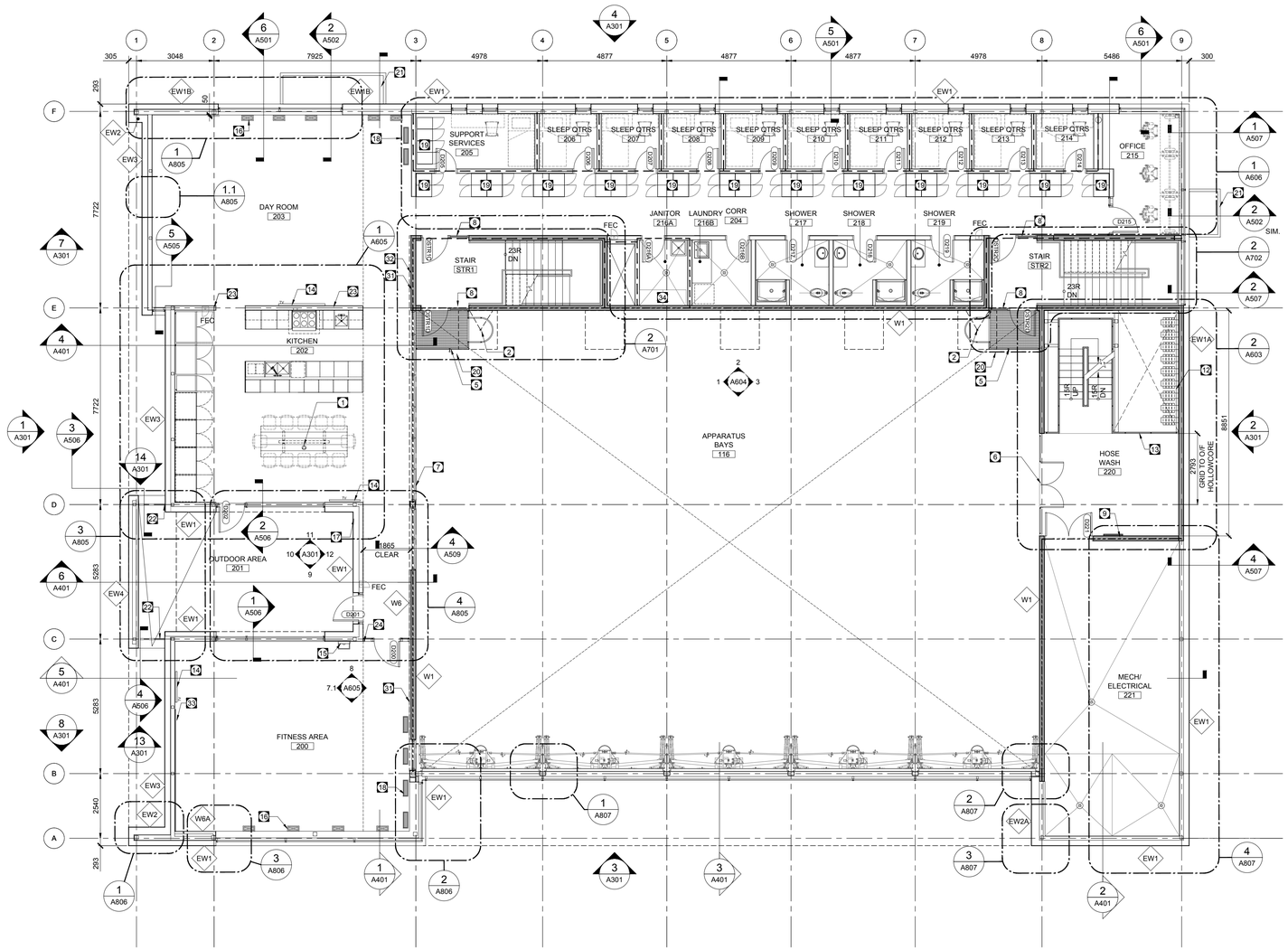

1 A102 SECOND FLOOR PLAN
1:100

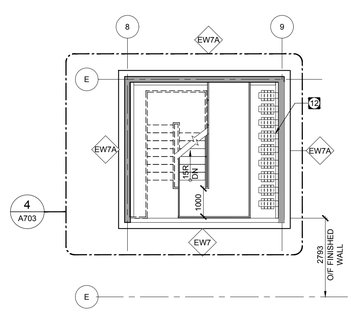

3 A102 CATWALK FLOOR @ HOSE WASH
1:100

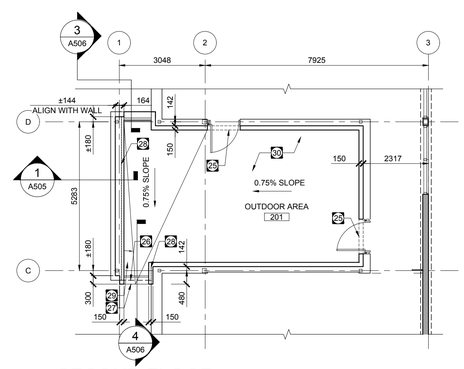

2 A102 SECOND FLOOR CONCRETE PATIO PLAN
1:100

GENERAL NOTES

1. ALL INTERIOR WALLS TO EXTEND TO U/S OF STRUCTURE UNLESS OTHERWISE NOTED.
2. ALL DIMENSIONS SHOWN TO FACE OF FINISH UNLESS OTHERWISE NOTED.
3. PROVIDE 19MM PLYWOOD BACKERBOARD AT WALL MOUNTED ELECTRICAL EQUIPMENT
4. COORDINATE MECHANICAL AND ELECTRICAL WITH STRUCTURE AND ADJUST FURRING AS REQUIRED IN CONJUNCTION WITH ARCHITECT.
5. ALL INTERIOR WALLS TO BE W5 UNLESS OTHERWISE NOTED. REFER TO ENLARGED PLANS AND STAIR DETAILS FOR ADDITIONAL WALL TAGS.
6. HATCH DENOTES CONCRETE MASONRY WALL
5. STEEL STUD HEADER REQUIRED AT ALL INTERIOR CURTAINWALL. COORDINATE PERFORMANCE REQUIREMENTS WITH SPECIFICATION.
6. REFER TO EXTERIOR ELEVATIONS FOR LOCATIONS AND EXTENT OF GLAZING
7. FURNITURE SHOWN FOR COORDINATION PURPOSES ONLY.

KEYED NOTES

1. RECESSED FLOOR BOX
2. FIREFIGHTER'S POLE
3. NOT USED.
4. METAL PEGS FOR HOSE STORAGE - TYP
5. METAL PLATFORM AND GUARDRAIL AT SLIDE POLE
6. INTERIOR GUARDRAIL AT STORAGE C/W SWING DOORS
7. SPRINKLERED GLASS
8. FIRE RATED GLASS
9. ROOF ACCESS LADDER
10. MILLWORK
11. SOLID SURFACE COUNTER OR BENCH
12. METAL PEGS FOR HOSE STORAGE - TYP
13. METAL GUARDRAIL
14. WALL MOUNTED TELVISION
15. SURFACE MOUNT BOTTLE FILLING STATION - REFER TO MECH.CENTRE ON WALL ASSEMBLY
16. SUPPLY AIR GRILLE AT FLOOR - TYP
17. WALL HYDRANT - REFER TO MECHANICAL
18. RETURN AIR GRILLE AT FLOOR - TYP
19. WARDROBE LOCKERS
20. STRUCTURAL STEEL HANGER AT LANDING - REFER TO STRUCTURAL.
21. LINE OF ENTRANCE CANOPY BELOW. REFER TO ROOF PLAN FOR LAYOUT AND SLOPE
22. METAL GUARD - REFER TO DETAILS
23. CENTRE WALL ASSEMBLY ON GRID
24. ALIGN WITH WALL AS SHOWN
25. CURB CUT TO ACCOMODATE DOOR - COORDINATE LAYOUTS
26. O/F CLADDING BELOW
27. EDGE OF CONCRETE
28. O/F WALL CLADDING ABOVE
29. EDGE OF CONCRETE SLAB TO BE 75MM MIN. AT LOWEST ELEVATION ALONG SLOPE
30. HEATING CABLES EMBEDDED IN CONCRETE SLAB. COORDINATE WITH SUPPLIER
31. WHITEBOARD. REFER TO ELEVATIONS
32. TACKBOARD.REFER TO ELEVATIONS
33. MIRRORS
34. METAL STORAGE SHELVING

Cibinel Architecture Ltd
560 ACADEMY ROAD WINNIPEG MB R3N 0E3
T. 204 989 8910
ARCHITECT

NO.	DATE	REVISION / ISSUANCE
00	2023.02.03	ISSUED FOR CONSTRUCTION

Seal

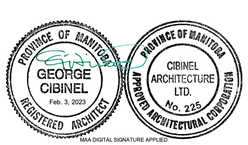

Project
WFPS STATION 9
1083 AUTUMNWOOD DRIVE

Sheet Title
SECOND FLOOR PLAN

Project No. 2150

Sheet A102