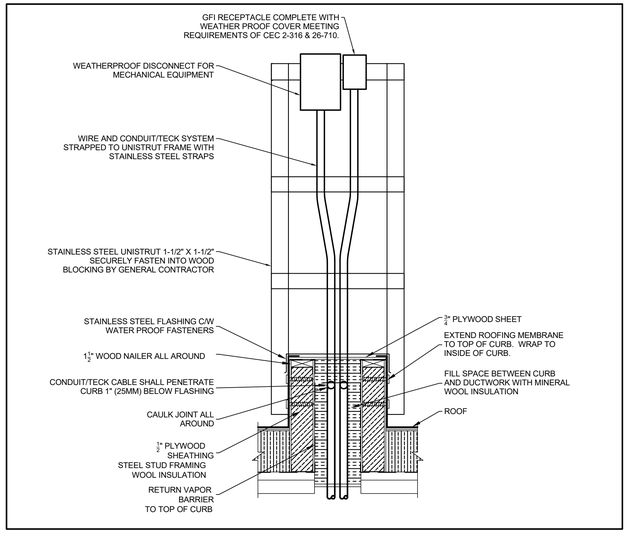


ROOF ELECTRICAL INSTALLATION - STAND-ALONE CURB

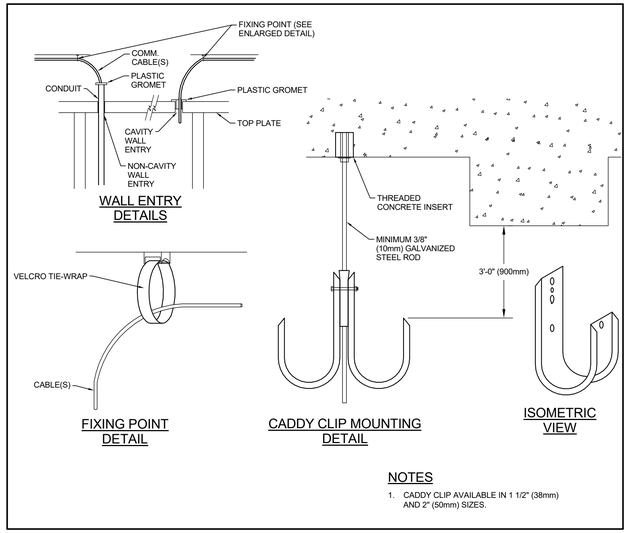


J-HOOK WALL ENTRY DETAIL

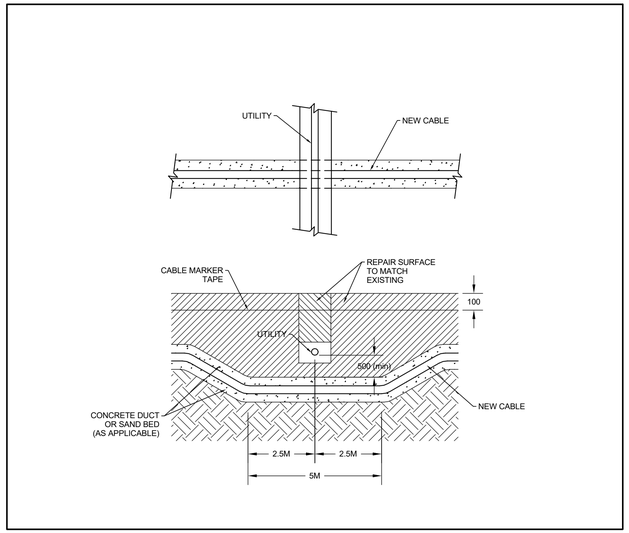


UTILITY CROSSING

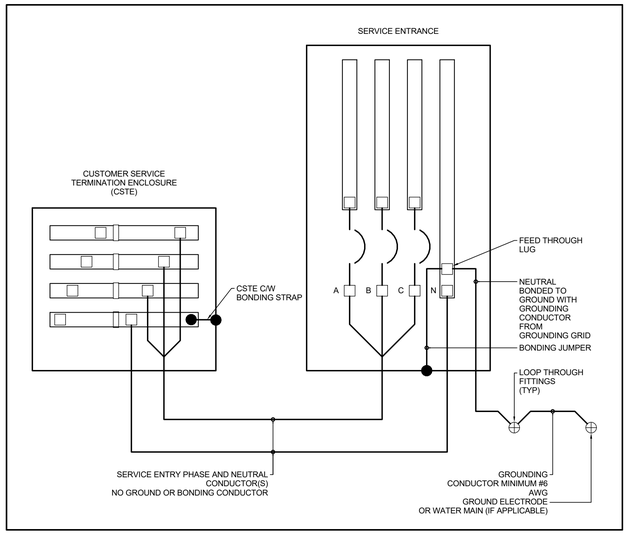


CSTE WIRING DETAIL - 4 WIRE SERVICE

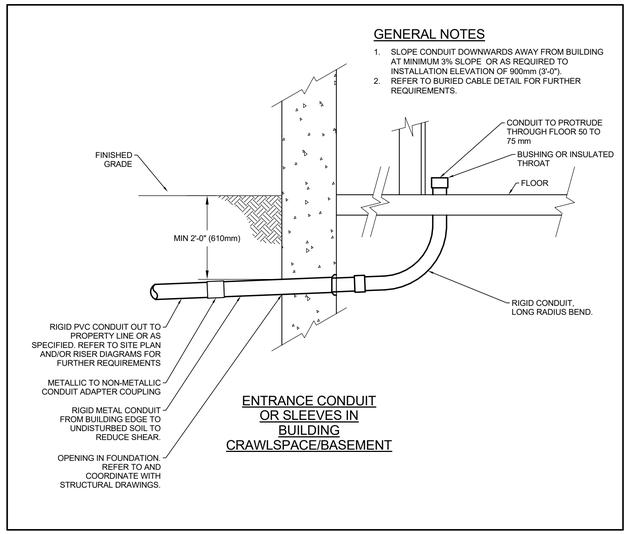


ENTRANCE CONDUIT BELOW GRADE

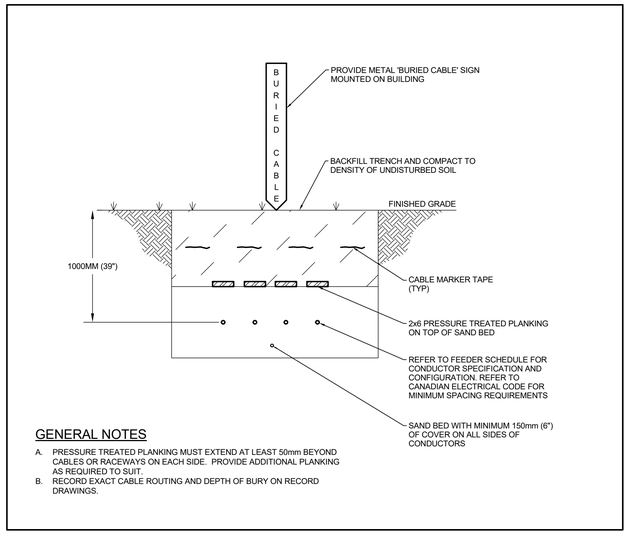


BURIED CABLE DETAIL


Cibinel Architecture Ltd
560 ACADEMY ROAD WINNIPEG MB R3N 0E3
T. 204 989 8910

ARCHITECT

epp siepman engineering
400 - 136 Market Avenue
Winnipeg, MB R3B 0P4
T 204 453 1080

CONSULTANT


ENGINEERS GEOSCIENTISTS MANITOBA
Certificate of Authorization
Epp Siepman Engineering Inc.
No. 4035

This is a print of a document that has been electronically authenticated with technology authorized by the Engineers Geoscientists Manitoba. The original is in electronic form.

| NO. | DATE | REVISION / ISSUANCE |
|---|---|---|
| 0 | 2023-02-03 | ISSUED FOR CONSTRUCTION |

Seal

Project
WFPS STATION 9

1083 AUTUMNWOOD DRIVE

Sheet Title
ELECTRICAL DETAILS

Project No. 22028

Sheet E4.1