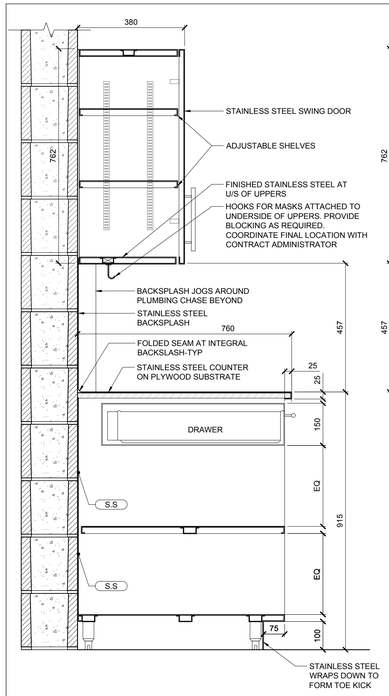

1 A901 1:10
MILLWORK SECTION HOSE WASH

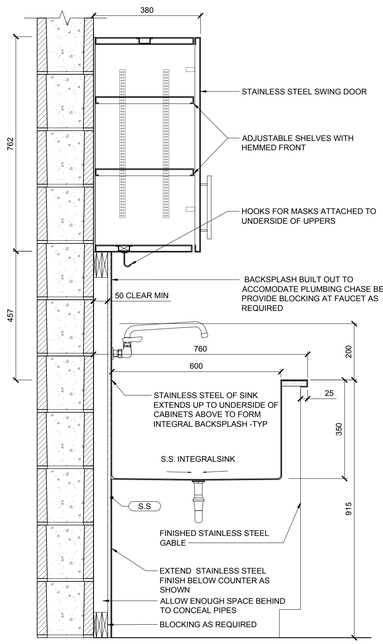

2 A901 1:10
MILLWORK SECTION HOSE WASH

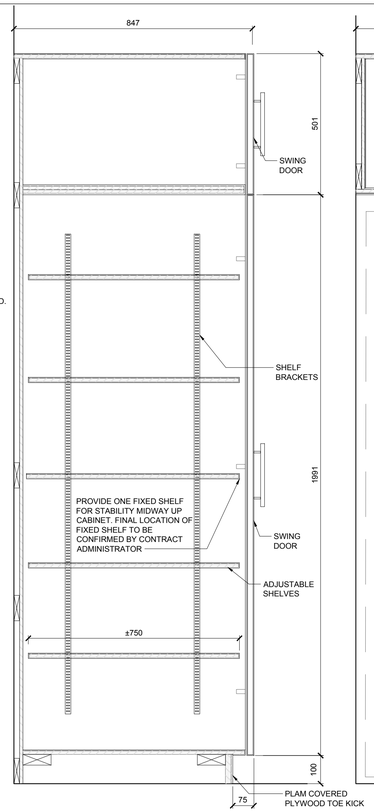

3 A901 1:10
KITCHEN MILLWORK SECTION TALL CABINETS

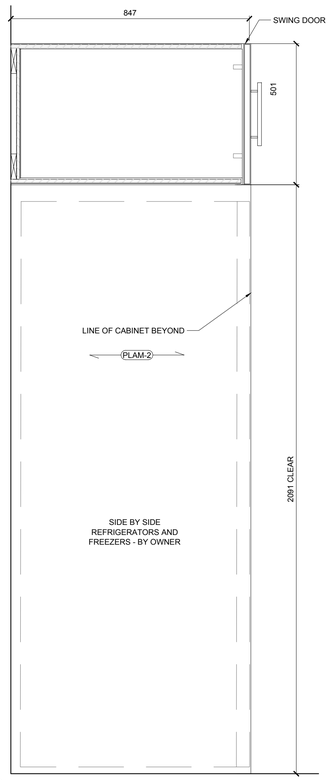

4 A901 1:10
KITCHEN MILLWORK SECTION TALL CABINETS

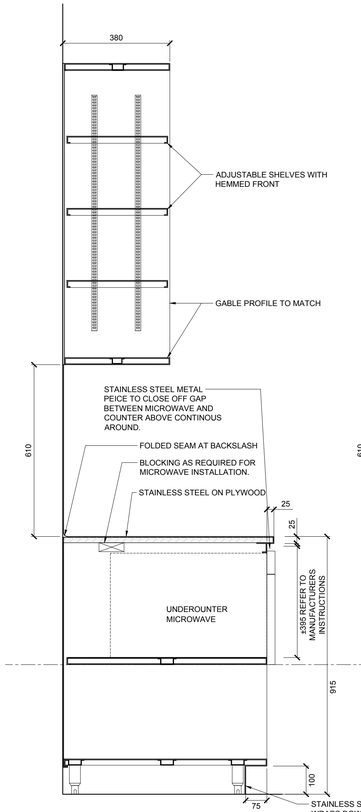

5 A901 1:10
KITCHEN MILLWORK SECTION @ MICROWAVE

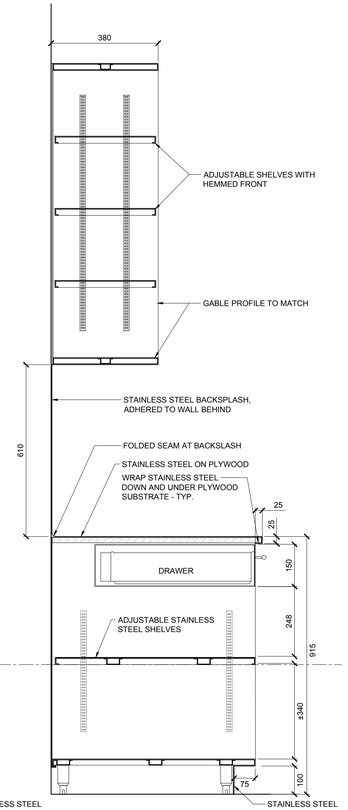

6 A901 1:10
KITCHEN MILLWORK SECTION @ DRAWER

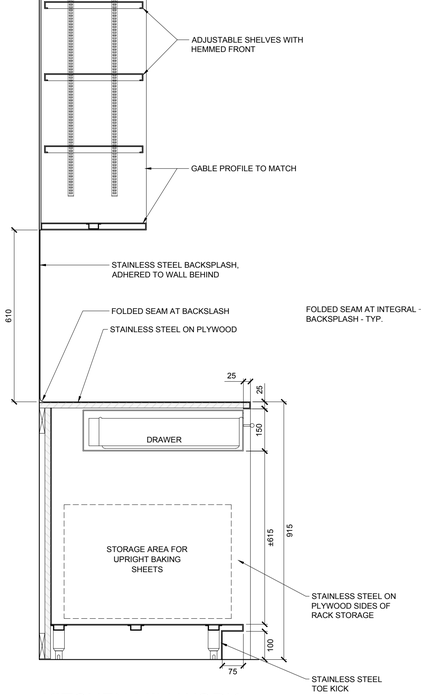

7 A901 1:10
KITCHEN MILLWORK SECTION @ RACK STORAGE

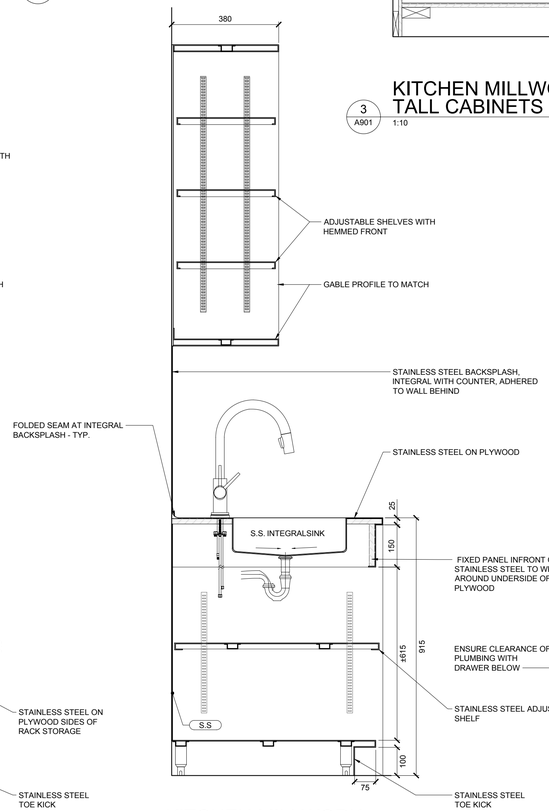

8 A901 1:10
KITCHEN MILLWORK SECTION @ HANDWASH SINK

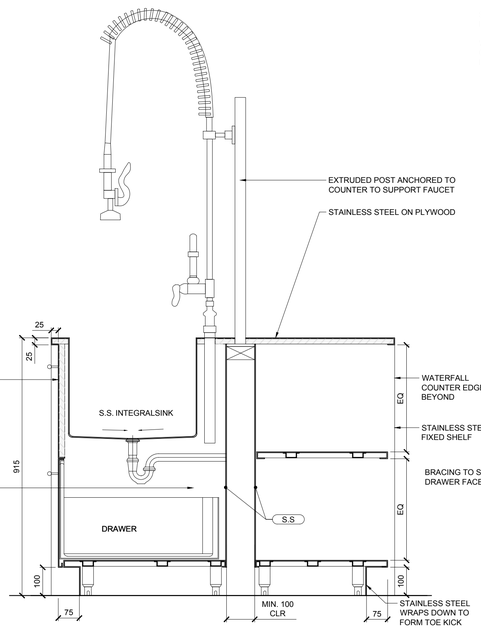

9 A901 1:10
MILLWORK SECTION KITCHEN SHELVES @ SOUTH

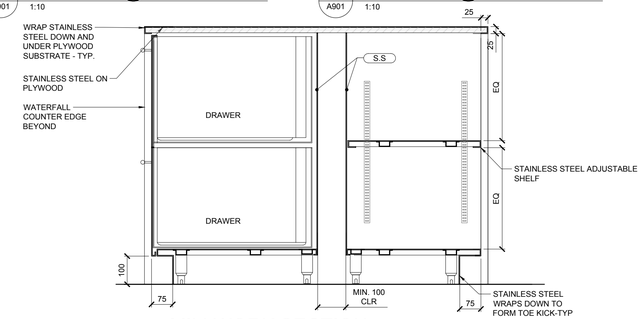

10 A901 1:10
MILLWORK SECTION KITCHEN SHELVES @ SOUTH

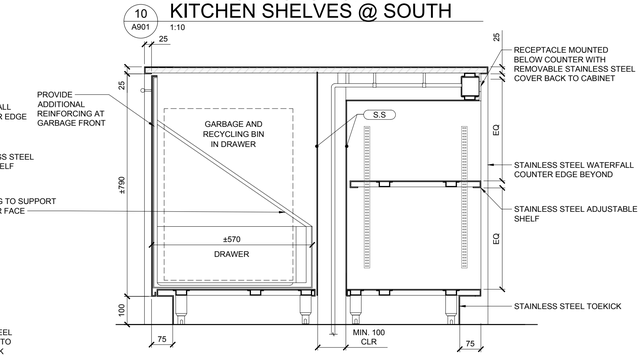

11 A901 1:10
MILLWORK SECTION GARBAGE AND RECYCLING DRAWER

Cibinel Architecture Ltd
560 ACADEMY ROAD WINNIPEG MB R3N 0E3
T. 204 989 8910
ARCHITECT

NO.	DATE	REVISION / ISSUANCE
00	2023.02.03	ISSUED FOR CONSTRUCTION

Seal

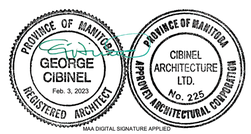

Project
WFPS STATION 9
1083 AUTUMNWOOD DRIVE

Sheet Title
MILLWORK

Project No.
2150

Sheet
A901

CIBINEL - Arch D - 24" X 36"