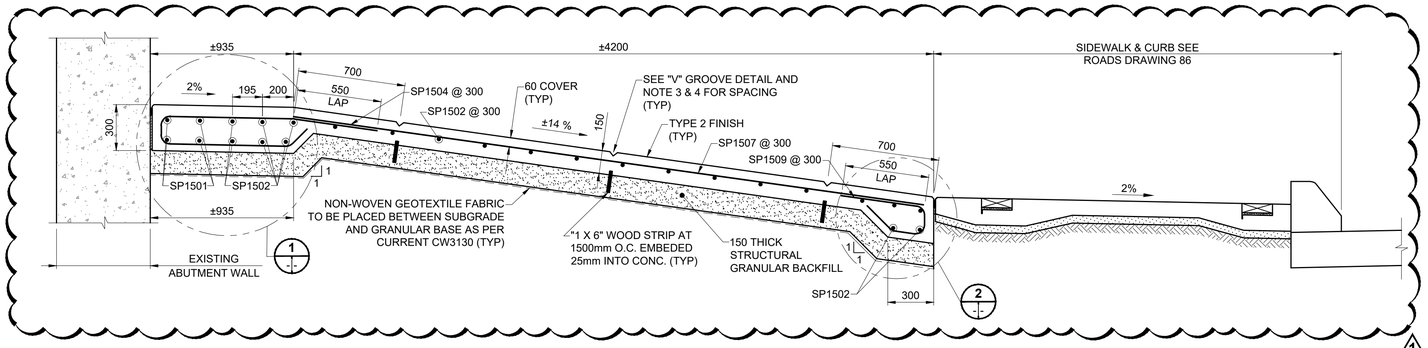

SLOPE PAVING SECTION AT ℄ OF BRIDGE

SOUTH ABUTMENT
SCALE 1:20

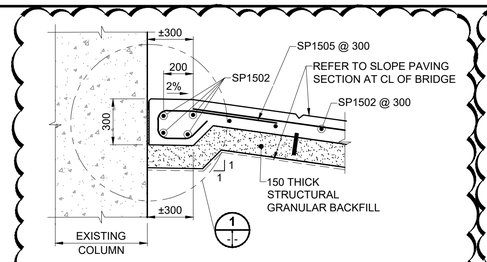

SLOPE PAVING PARTIAL SECTION AT CORNER COLUMN PROJECTIONS

SOUTH & NORTH ABUTMENT
SCALE 1:20

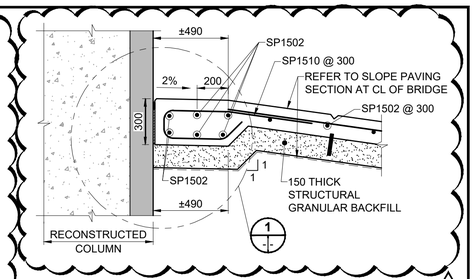

SLOPE PAVING PARTIAL SECTION AT COLUMNS

SOUTH & NORTH ABUTMENT
SCALE 1:20

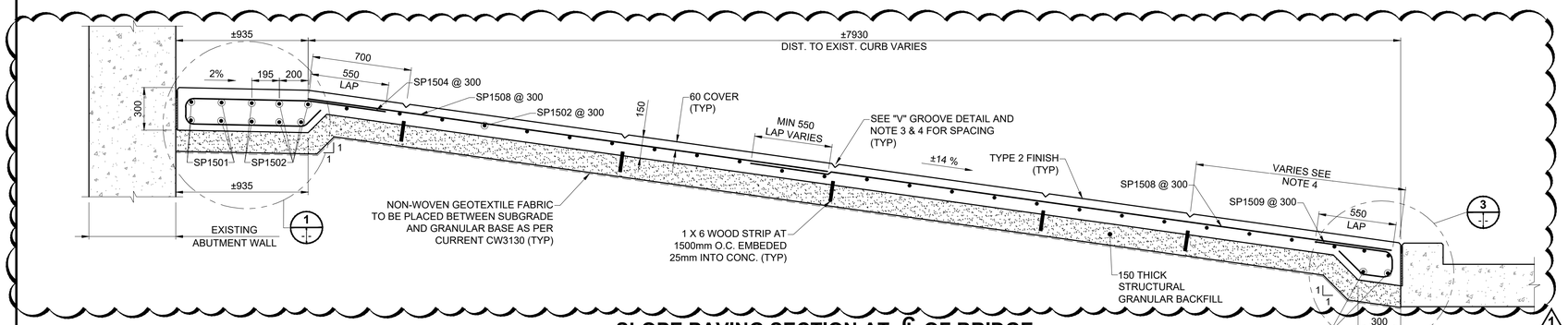

SLOPE PAVING SECTION AT ℄ OF BRIDGE

NORTH ABUTMENT
SCALE 1:20

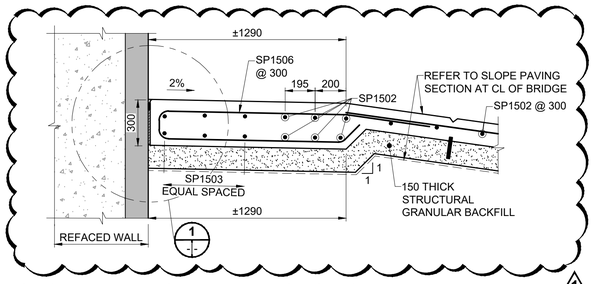

SLOPE PAVING PARTIAL SECTION AT ABUTMENT WALL BENEATH THE CARRIAGE WAYS

SOUTH & NORTH ABUTMENT
SCALE 1:20

BILL OF REINFORCING STEEL (BLACK STEEL)

SLOPE PAVING (SP)

MARK	TYPE	PIN DIAMETER	LENGTH (mm)	NO. BARS	MASS
SOUTH ABUTMENT SLOPE PAVING					
SP1501	STR		2220	12	41.82
SP1502	STR		10675	69	1156.42
SP1503	STR		1980	36	111.91
SP1504	BENT	90	2595	21	85.56
SP1505	BENT	90	1320	10	20.72
SP1506	BENT	90	3310	42	218.26
SP1507	STR		4380	104	715.17
SP1509	BENT	90	1175	104	191.85
SP1510	BENT	90	1710	32	85.91
TOTAL REINFORCING STEEL MASS (kg):					2627.63
NORTH ABUTMENT SLOPE PAVING					
SP1501	STR		2220	12	41.82
SP1502	STR		10675	105	1759.77
SP1503	STR		1980	36	111.91
SP1504	BENT	90	2595	21	85.56
SP1505	BENT	90	1320	4	8.29
SP1506	BENT	90	3310	42	218.26
SP1508	STR		4250	196	1307.81
SP1509	BENT	90	1175	98	180.79
SP1510	BENT	90	1710	32	85.91
TOTAL REINFORCING STEEL MASS (kg):					3800.12

BENDING DIAGRAM (NTS)

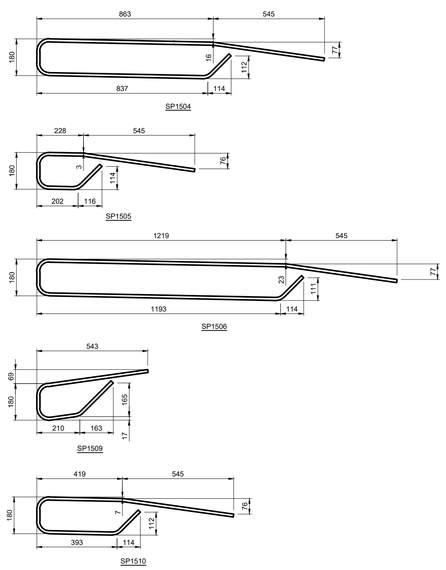

NOTES:

1. ALL DIMENSIONS GIVEN IN BENDING DIAGRAM ARE OUT-TO-OUT, EXCEPT RADII AND EXTENSIONS ON 90°, 135° & 180° HOOKS. EXTENSIONS ON 90°, 135° & 180° HOOKS ARE THE "A" OR "G" DIMENSIONS FOR THE STANDARD 90°, 135° & 180° HOOKS REFERENCED FROM THE RSIC "MANUAL OF STANDARD PRACTICE". RADII ARE INSIDE DIMENSIONS. ALL REINFORCING STEEL SHALL CONFORM TO THE LATEST EDITION OF CAN/CSA-S6 CLAUSE 8.14 "DETAILS OF REINFORCEMENT AND SPECIAL DETAILING PROVISIONS", UNLESS NOTED OTHERWISE IN THE BILL OF REINFORCING STEEL.
2. ALL REINFORCING STEEL SHALL BE DEFORMED STEEL, UNLESS NOTED OTHERWISE IN THE BILL OF REINFORCING STEEL.
3. ALL REINFORCING WITH SUFFIX "SS" SHALL BE STAINLESS STEEL CONFORMING TO THE REQUIREMENTS OF ASTM A955M, 300 SERIES, MINIMUM GRADE 420, OF ONE OF THE FOLLOWING UNS DESIGNATIONS: S31653, S31803, OR S32304.
4. ALL REINFORCING STEEL SHALL CONFORM TO THE LATEST EDITION OF CAN/CSA G30.18 "CARBON STEEL BARS FOR CONCRETE REINFORCEMENT" GRADE 400W, UNLESS NOTED OTHERWISE.
5. LIKE BARS SHALL BE BUNDLED, SECURELY TIED AND IDENTIFIED AS TO MARK AND SITE NO. BY APPROPRIATE MEANS. ALL OTHER ITEMS TO BE IDENTIFIED IN A SIMILAR FASHION.
6. UNLESS OTHERWISE NOTED DIAMETER "D" IS THE SAME ALL HOOKS AND BENDS ON A BAR. WHERE SLOPE DIFFERS FROM 45° DIMENSIONS "H" AND "K" MUST BE SHOWN.
7. BILL OF REINFORCING AND BENDING DIAGRAMS DO NOT INCLUDE CHANGES MADE DURING CONSTRUCTION. RECORD DRAWING REINFORCEMENT CHANGES ARE INCLUDED IN THE RESPECTIVE REINFORCING DETAILS.

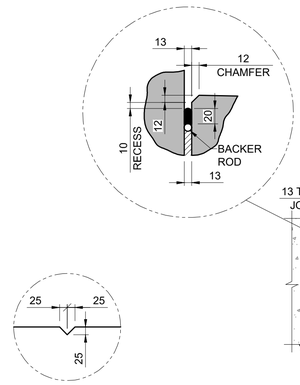

"V" GROOVE DETAIL

SCALE 1:10

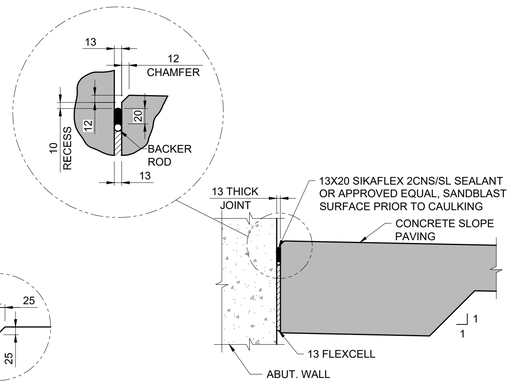

1 DETAIL

SCALE: 1:10

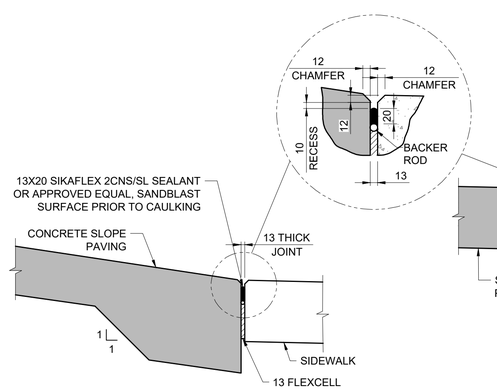

2 DETAIL

SCALE: 1:10

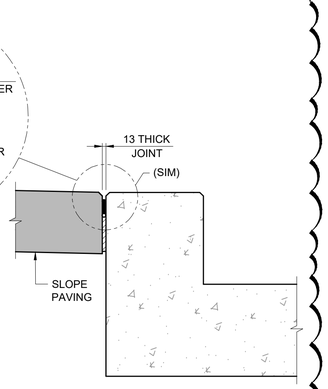

3 DETAIL

SCALE: 1:10

GENERAL NOTES:

1. FOR SOUTH ABUTMENT SLOPE PAVING, COMPLETE NEW SIDEWALK CONSTRUCTION FIRST, THEN TIE-IN SLOPE PAVING AS SHOWN. REFER TO ROADS DRAWINGS FOR SIDEWALK GRADING.
2. FOR NORTH ABUTMENT SLOPE PAVING, TIE-IN SLOPE PAVING TO EXISTING CURB AS SHOWN.
3. "V" GROOVES FOR CRACK CONTROL JOINTS SHALL BE PROVIDED AT 1500mm O.C. OVER WOOD FURRING STRIPS ONLY.
4. EDGE PANEL "V" GROOVE SPACING VARIES TO MAINTAIN CURVE OF EXISTING ROADWAY CURB, MINIMUM 1500mm AND MAXIMUM 2400mm.

METRIC
WHOLE NUMBERS INDICATE MILLIMETRES
DECIMALIZED NUMBERS INDICATE METRES

ENGINEERS GEOSCIENTISTS MANITOBA
Certificate of Authorization
MORRISON HERSHFIELD
No. 1736

TENDER No. 615-2022

LOCATION APPROVED
UNDERGROUND STRUCTURES

SUPR. U/G STRUCTURES COMMITTEE — DATE

NOTE:
LOCATION OF UNDERGROUND STRUCTURES AS SHOWN ARE BASED ON THE BEST INFORMATION AVAILABLE BUT NO GUARANTEE IS GIVEN THAT ALL EXISTING UTILITIES ARE SHOWN OR THAT THE GIVEN LOCATIONS ARE EXACT. CONFIRMATION OF EXISTENCE AND EXACT LOCATION OF ALL SERVICES MUST BE OBTAINED FROM THE INDIVIDUAL UTILITIES BEFORE PROCEEDING WITH CONSTRUCTION.

BM 54-006 — Tblt. in S. face of E. Conc. pier in 1st row of Conc. piers N. of S. end of St. Vital Bridge over Red River, N. of Kingston Row, 5 m W. of E. end of Pier.
ELEV 228.166 m

No.	REVISIONS	YY/MM/DD	BY
1	REVISED FOR ADDENDUM 1	22/12/13	BAP
0	ISSUED FOR TENDER	22/11/24	BAP

MORRISON HERSHFIELD

DESIGNED BY	SF	CHECKED BY	BAP
DRAWN BY	MB	APPROVED BY	BE
HOR SCALE	AS SHOWN	RELEASED FOR CONSTRUCTION	
VERT SCALE			
DATE	NOV 24, 2022	DATE	

PROFESSIONAL'S SEAL
PROVINCE OF MANITOBA — S. Faraz — Member 42621 — 2022-12-14 — REGISTERED PROFESSIONAL ENGINEER

CONSULTANT FILE NAME
2103510-SVB DD-BR-SLPAV01.dwg

Winnipeg

THE CITY OF WINNIPEG
PUBLIC WORKS DEPARTMENT
ENGINEERING DIVISION

ST. VITAL TWIN BRIDGE OVER THE RED RIVER REHABILITATION AND RELATED WORKS

BRIDGE REHABILITATION
ABUTMENT MODIFICATIONS - SLOPE PAVING

CITY FILE NUMBER: B116-24-38
SHEET 124 OF 244
DRAWING NUMBER: 124

ISO A1 - 594mm x 841mm

X:\Proj\2021\2103510\00-St Vital Bridge over Red River PD\09. CAD\07 Sheets\Structural\Detailed Design\2103510-SVB DD-BR-SLPAV01.dwg Last Saved: 12/13/2022 12:47 PM by ASCott Plotted: 12/13/2022 12:51 PM by Allan Scott