Winnipeg

THE CITY OF WINNIPEG

WATER AND WASTE DEPARTMENT

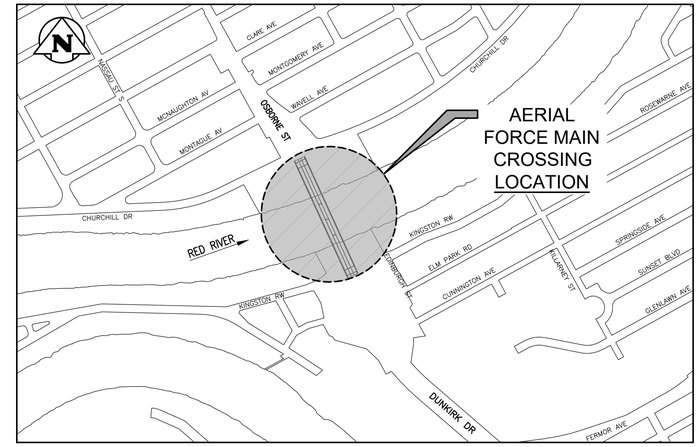

LOCATION PLAN

BALTIMORE FORCE MAIN PIPE CROSSING THE ST. VITAL BRIDGE

BID OPPORTUNITY No. 822-2020

ISSUED FOR TENDER

DECEMBER 22, 2020

TETRA TECH

2000120800-DWG-C1001

ACCEPTED BY:

ORIGINAL DRAWING
SIGNED BY: B. JONES, P. ENG — 20.12.22

B. JONES, P. ENG — DATE
SENIOR PROJECT ENGINEER

CITY DRAWING NUMBER:
1-0221S-D0001-001

DRAWING LIST

CITY OF WPG. DRAWING NUMBER	TETRA TECH DRAWING NUMBER	SHEET NO.	DRAWING DESCRIPTION
1–0221S–D0001–001	2000120800–DWG–C1001	1	COVER SHEET
1–0221S–D0002–001	2000120800–DWG–C1002	2	DESIGN DATA AND LIST OF DRAWINGS
1–0221S–D0003–001	2000120800–DWG–C1003	3	SCOPE OF WORK
1–0221S–D0004–001	2000120800–DWG–C1004	4	GENERAL ARRANGEMENT – PLAN AND ELEVATION
1–0221S–D0005–001	2000120800–DWG–C1005	5	GENERAL ARRANGEMENT – CROSS SECTIONS
1–0221S–M0001–001	2000120800–DWG–M1001	6	MECHANICAL – NPS 18 FORCE MAIN ACROSS BRIDGE – ELEVATION
1–0221S–M0002–001	2000120800–DWG–M1002	7	MECHANICAL – NPS 18 FORCE MAIN ACROSS BRIDGE – DETAILS – SHEET 1 OF 2
1–0221S–M0002–002	2000120800–DWG–M1003	8	MECHANICAL – NPS 18 FORCE MAIN ACROSS BRIDGE – DETAILS – SHEET 2 OF 2
1–0221S–S0001–001	2000120800–DWG–S1001	9	STRUCTURAL – OVERALL EXISTING GIRDER PLAN
1–0221S–S0002–001	2000120800–DWG–S1002	10	STRUCTURAL – EXISTING GIRDER MODIFICATION SECTIONS – SHEET 1 OF 2
1–0221S–S0002–002	2000120800–DWG–S1003	11	STRUCTURAL – EXISTING GIRDER MODIFICATION SECTIONS – SHEET 2 OF 2
1–0221S–E0001–001	2000120800–DWG–E1001	12	ELECTRICAL – SITE PLAN
1–0221S–E0002–001	2000120800–DWG–E1002	13	ELECTRICAL – NORTH RIVERBANK ELECTRICAL DETAILS
1–0221S–E0003–001	2000120800–DWG–E1003	14	ELECTRICAL – SOUTH RIVERBANK ELECTRICAL DETAILS
1–0221S–E0004–001	2000120800–DWG–E1004	15	ELECTRICAL – EXISTING WASTEWATER PUMPING STATION DETAILS
1–0221S–E0005–001	2000120800–DWG–E1005	16	ELECTRICAL – RTU PANEL & WASTEWATER PUMPING STATION MISC. INSTRUMENTATION WIRING DETAILS
1–0221S–C0001–001	2000120800–DWG–C1010	17	CIVIL – NORTH RIVER BANK CONNECTION
1–0221S–C0002–001	2000120800–DWG–C1011	18	CIVIL – SOUTH RIVER BANK CONNECTION
1–0221S–C0003–001	2000120800–DWG–C1012	19	CIVIL – DETAILS
1–0221S–C0004–001	2000120800–DWG–C1013	20	CIVIL – SITE RESTORATION

REFERENCE DOCUMENTS:

- DRAWINGS FOR ST. VITAL BRIDGE PROJECT (B–5015) (1964)
- DRAWINGS FOR ST. VITAL BRIDGE OVER RED RIVER STRUCTURE REHABILITATION AND RELATED WORKS (B116) (1988)
- DRAWINGS FOR BALTIMORE FORCE MAIN (MS–3C) (1994)
- DRAWINGS FOR BALTIMORE PUMPING STATION SUBSTRUCTURE (781, 782)
- DRAWINGS FOR WASTEWATER RIVER CROSSING LEAK MONITORING (05984, 05985, 06019) (2007)
- DRAWINGS FOR 2018 BYPASS PUMP ASSEMBLE AND MANHOLE INSTALLATION (1–0117L–M0001–001) (2018)

SECTIONS AND DETAILS:

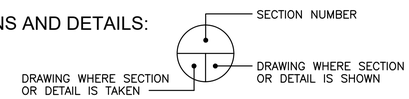

DESIGN DATA:

DESIGN SPECIFICATIONS:

FORCE MAIN STRUCTURAL STEEL PIPE SUPPORT ELEMENTS DESIGNED TO CAN/CSA S16–20, DESIGN OF STEEL STRUCTURES

CONNECTIONS TO EXISTING BRIDGE GIRDERS AND PIER MODIFICATIONS DESIGNED TO CAN/CSA S6–19, CANADIAN BRIDGE DESIGN CODE

DESIGN LOADS:

DEAD LOADS OF FORCE MAIN PIPE, CONTENTS, CONTAINMENT, SUPPORTS AND ACCESSORIES

LIVE LOAD OF LONGITUDINAL THRUST AND THERMAL EXPANSION/CONTRACTION

REINFORCING STEEL:

- BLACK STEEL REINFORCING SHALL CONFORM TO THE REQUIREMENTS OF THE LATEST EDITION AND ALL SUBSEQUENT REVISIONS OF CAN/CSA G30.18 GRADE 400W
- WHERE DISSIMILAR METALS WOULD BE IN CONTACT, NON–CONDUCTIVE SPACES OR REALIGNMENT OF REINFORCING STEEL SHALL BE REQUIRED
- MINIMUM LAP LENGTHS SHALL BE AS FOLLOWS:
  15M – 600 mm
  20M – 800 mm
  25M – 1200 mm
- REFER TO SPECIFICATION E13, REINFORCING STEEL.

STRUCTURAL CONCRETE:

CONCRETE TYPE	EXPOSURE CLASS	NOMINAL COMPRESSIVE STRENGTH	MAXIMUM AGGREGATE SIZE	AIR CONTENT CATEGORY	SPECIAL REQUIREMENTS	POST RESIDUAL CRACKING INDEX
1	C–1	35 MPa @ 28 DAYS	20mm	1	–	–
2	C–1	35 MPa @ 28 DAYS	20mm	1	–	–

TYPE 1: PIER MODIFICATIONS
TYPE 2: DRAINAGE CHANNEL

- CEMENTITIOUS MATERIALS SHALL CONFORM TO THE REQUIREMENTS OF THE LATEST EDITION AND ALL SUBSEQUENT REVISIONS OF CAN/CSA A3001. SILICA FUME SHALL NOT EXCEED 8% BY MASS OF CEMENT. FLY ASH SHALL BE CLASS C1 OF F AND NOT EXCEED 30% BY MASS OF CEMENT
- ANCHOR BOLTS, NUTS, AND WASHERS SHALL CONFORM TO THE REQUIREMENTS OF THE LATEST EDITION OF ASTM F1554, GRADE 55, WITH THE TOP 300 mm OF THE BOLTS THREADED UNC CLASS 2A
- ANCHOR BOLTS SHALL BE ALIGNED WITH A TEMPLATE ABOVE THE TOP OF CONCRETE AND REMOVED FOLLOWING A MINIMUM 24 HOUR CURING PERIOD
- ALL EXPOSED EDGES SHALL BE CHAMFERED 20 mm
- EXISTING CONCRETE SURFACES IN CONTACT WITH NEW CONCRETE PIER SUPPORT ADDITIONS SHALL BE CLEANED AND ROUGHENED TO CSP 4 "LIGHT SCARIFICATION" TO CONFORM TO THE REQUIREMENTS OF THE LATEST EDITION AND ALL SUBSEQUENT REVISIONS OF ICRI GUIDELINE NO. 03730 AND 03732.
- MINIMUM CONCRETE COVER TO REINFORCING STEEL SHALL BE 65 mm
- REFER TO SPECIFICATION E14, STRUCTURAL CONCRETE

STRUCTURAL STEEL:

- STRUCTURAL STEEL SHALL CONFORM TO THE REQUIREMENTS OF THE LATEST EDITION AND ALL SUBSEQUENT REVISIONS OF CAN/CSA G40.21 GRADE 300W UNLESS OTHERWISE NOTED
- HIGH STRENGTH BOLTS, NUTS, AND WASHERS SHALL CONFORM TO THE REQUIREMENTS OF THE LATEST EDITION AND ALL SUBSEQUENT REVISIONS OF ASTM F3125M, GRADE A325, TYPE 1 HEAVY HEX HEAD
- NUTS SHALL CONFORM TO THE REQUIREMENTS OF THE LATEST EDITION AND ALL SUBSEQUENT REVISIONS OF ASTM A563
- WASHERS SHALL CONFORM TO THE REQUIREMENTS OF THE LATEST EDITION AND ALL SUBSEQUENT REVISIONS OF ASTM F436
- HIGH STRENGTH BOLTS, NUTS, AND WASHERS SHALL BE HOT–DIP GALVANIZED TO CONFORM TO THE REQUIREMENTS OF THE LATEST EDITION AND ALL SUBSEQUENT REVISIONS OF ASTM F2329
- ALL BOLTED CONNECTIONS SHALL BE SLIP–CRITICAL CONNECTIONS WITH FAYING SURFACES PREPARED AS NOTED ON THE STRUCTURAL DRAWINGS
- ALL SHOP WELDING AND PROVISION OF HOLES SHALL BE COMPLETED PRIOR TO HOT–DIP GALVANIZING. EXTERIOR AND INTERIOR SURFACES OF MEMBERS SHALL BE CLEANED OF ANY WELD SLAG OR OTHER DEBRIS PRIOR TO PREPARATION FOR HOT–DIP GALVANIZING
- WELDING CONSUMABLES SHALL CONFORM TO THE REQUIREMENTS OF THE LATEST EDITION OF CAN.CSA W48 ELECTRODE CLASSIFICATION E49XX
- ADEQUATE VENTING AND DRAINAGE HOLES SHALL BE PROVIDED IN ENCLOSED SECTIONS TO BE HOT–DIP GALVANIZED AND WHERE SHOWN ON THE DRAWINGS
- WELDING OF STRUCTURAL STEEL SHALL CONFORM TO THE REQUIREMENTS OF THE LATEST EDITION AND ALL SUBSEQUENT REVISIONS OF CAN/CSA W59
- ALL STRUCTURAL ELEMENTS SHALL BE HOT DIP GALVANIZED
- STRUCTURAL STEEL TO BE HOT DIP GALVANIZED SHALL CONFORM TO THE REQUIREMENTS OF THE LATEST EDITION AND ALL SUBSEQUENT REVISIONS OF CAN/CSA G164 AND ASTM A123 TO A NET RETENTION OF 610 g/m^2
- FIELD APPLIED GALVANIZING SHALL BE A ZINC–BASED ALLOY ROD TO CONFORM TO THE REQUIREMENTS OF THE LATEST EDITION AND ALL SUBSEQUENT REVISIONS OF ASTM A780
- REFER TO SPECIFICATION E15, FORCE MAIN STRUCTURAL STEEL SUPPORT SYSTEM

AERIAL SUPPORTED FORCE MAIN:

- FORCE MAIN PIPE SHALL BE SCHEDULE 80S (0.5" WALL THICKNESS) STAINLESS STEEL TO CONFORM TO THE REQUIREMENTS OF THE LATEST EDITION AND ALL SUBSEQUENT REVISIONS OF ASTM A312 GRADE TP304L
- FORCE MAIN FITTINGS SHALL BE SCHEDULE 80S SEAMLESS STAINLESS STEEL BUTT WELDING FITTINGS TO CONFORM TO THE REQUIREMENTS OF THE LATEST EDITION AND ALL SUBSEQUENT REVISIONS OF ASTM A403 GRADE WP304L, AND ASME B16.9. CROTCH THICKNESS AND RADIUS OF TEES SHALL CONFORM TO THE REQUIREMENTS OF THE LATEST EDITION AND ALL SUBSEQUENT REVISIONS OF ASME B31.3, TABLE D300
- FORCE MAIN PIPE FLANGES SHALL BE FORGED STAINLESS STEEL TO CONFORM TO THE REQUIREMENTS OF THE LATEST EDITION AND ALL SUBSEQUENT REVISIONS OF ASTM A182 GRADE F304L AND SHALL CONFORM TO ANSI B16.5 CLASS 150 WITH RAISED FACE TO MATCH THE MATING FLANGE
- FORCE MAIN BLIND FLANGES SHALL BE WELDING NECK TYPE OF FORGED STAINLESS STEEL TO CONFORM TO THE REQUIREMENTS OF THE LATEST EDITION AND ALL SUBSEQUENT REVISIONS OF ASTM A312 GRADE F304L AND SHALL CONFORM TO ANSI B16.5 CLASS 150 WITH RAISED FACE
- FLANGE BOLT–STUDS SHALL BE ALLOY STEEL TO CONFORM TO THE REQUIREMENTS OF THE LATEST EDITION AND ALL SUBSEQUENT REVISIONS OF ASTM A193 GRADEB7 WITH FULL LENGTH THREADS TO ANSI B1.1 CLASS 2A
- FLANGE NUTS SHALL BE ALLOY STEEL TO CONFORM TO THE REQUIREMENTS OF THE LATEST EDITION AND ALL SUBSEQUENT REVISIONS OF ASTM A194 GRADE 2H, HEAVY HEX, CLASS 2 FIT, TO CONFORM TO ANSI B18.2, WITH THREADS TO ANSI B1.1 CLASS 2B
- FLANGE GASKETS SHALL BE CLASS 150, TO CONFORM TO THE REQUIREMENTS OF THE LATEST EDITION AND ALL SUBSEQUENT REVISIONS OF ANSI B16.21, FLAT RING, NON–METALLIC, 1.6mm THICK
- EXPANSION JOINTS SHALL BE MANUFACTURED OF DUCTILE IRON CONFORMING TO THE TO THE REQUIREMENTS OF THE LATEST EDITION AND ALL SUBSEQUENT REVISIONS OF ASTM A536 AND AWWA C153/A21.53 AND SHALL HAVE CLASS 150 FLANGES CONFORMING TO THE DIMENSIONAL REQUIREMENTS OF AWWA C110/A21.10
- BALL VALES SHALL BE 3–PIECE CONSTRUCTION, FULL PORT, CLASS 600 TO CONFORM TO THE REQUIREMENTS OF THE LATEST EDITION AND ALL SUBSEQUENT REVISIONS OF ASME B16.34, WITH CAST STAINLESS STEEL BODY TO CONFORM TO ASTM A351–CF8M, NPT END CONNECTIONS TO ASME B1.20.1 TYPE 316 STAINLESS STEEL BALL AND BLOWOUT–PROOF STEM, PTFE PACKING AND GASKETS, AND 2 ¼" STEM EXTENSION
- BEARING SUPPORT ASSEMBLY SHALL BE ANVIL FIG. 432 FOR NPS 24 (PIPE CLAMPS), ANVIL FIG. 271 FOR NPS 24 AND ANVIL FIG. 171 FOR NPS 24. ALL ANVIL ITEMS AND FASTENERS SHALL BE HOT DIP GALVANIZED TO CONFORM TO THE REQUIREMENTS OF THE LATEST EDITION AND ALL SUBSEQUENT REVISIONS OF CAN/CSA G164 AND ASTM A123 TO A NET RETENTION OF 610 g/m^2
- PIPE INSULATION SHALL CONFORM TO THE REQUIREMENTS OF THE LATEST EDITION AND ALL SUBSEQUENT REVISIONS OF ASTM D1622, D6226, D2842, AND C518
- OUTER JACKET SHALL BE MINIMUM 22 GAUGE, LOCK FORMING QUALITY GALVANIZED SHEET STEEL WITH SPIRAL LOCK SEAM OR MINIMUM 3.81 mm THICK, UV INHIBITED, BLACK, CONTINUOUSLY EXTRUDED HDPE WITH PROPERTIES SUITED TO AMBIENT TEMPERATURES RANGING FROM -40^0C TO +40°C AND TESTED AND CERTIFIED FOR COLDER WEATHER HANDLING, INSTALLATION AND OPERATION TO –55°C
- MAXIMUM TEST PRESSURE FOR AERIAL PIPE = 410 kPa (60 psi), GOVERNED BY STRUCTURAL SUPPORTS
- FORCE MAIN PIPE DEFLECTIONS AS A RESULT OF FUTURE BRIDGE OFF–LOADING OF REHABILITATION HAVE BEEN CONSIDERED IN THE DESGIN AS SHOWN IN THE LOAD–DEFELECTION DIAGRAMS ON ST. VITAL BRIDGE DRAWING B–5015–109 (S–2)
- REFER TO SPECIFICATION E16, FORCE MAIN ACROSS BRIDGE

TEMPORARY WORKS:

- SHORING AND FALSE WORKS SHALL CONFORM TO THE REQUIREMENTS OF THE LATEST EDITION AND ALL SUBSEQUENT REVISIONS OF CAN/CSA S269.1.
- REFER TO SPECIFICATION E12, REMOVAL OF EXISTING AERIAL SUPPORTED FORCE MAIN PIPE

ENGINEERS GEOSCIENTISTS MANITOBA
Certificate of Authorization
Tetra Tech Canada Inc.
No. 6499

B.M. ELEV.

NO.	REVISIONS	DATE	BY
00	ISSUED FOR TENDER	20.12.22	JB

TETRA TECH

DESIGNED BY J.B. | CHECKED BY K.Y.
DRAWN BY E.V. | APPROVED BY B.M.
HOR. SCALE: / VERTICAL: AS NOTED | ACCEPTED BY ORIGINAL SIGNED | DATE 20.12.22
DATE 20.10.08 | B. JONES, P.ENG. SENIOR PROJECT ENGINEER

ORIGINAL DRAWING REVISION "00" SEALED BY J.S. BETKE 20.12.22

CONSULTANT DRAWING NO. 2000120800–DWG–C1002

Winnipeg
THE CITY OF WINNIPEG
WATER AND WASTE DEPARTMENT

BALTIMORE FORCE MAIN PIPE CROSSING THE ST. VITAL BRIDGE

CITY DRAWING NUMBER 1–0221S–D0002–001
SHEET 2 OF 20

DESIGN DATA AND LIST OF DRAWINGS

2

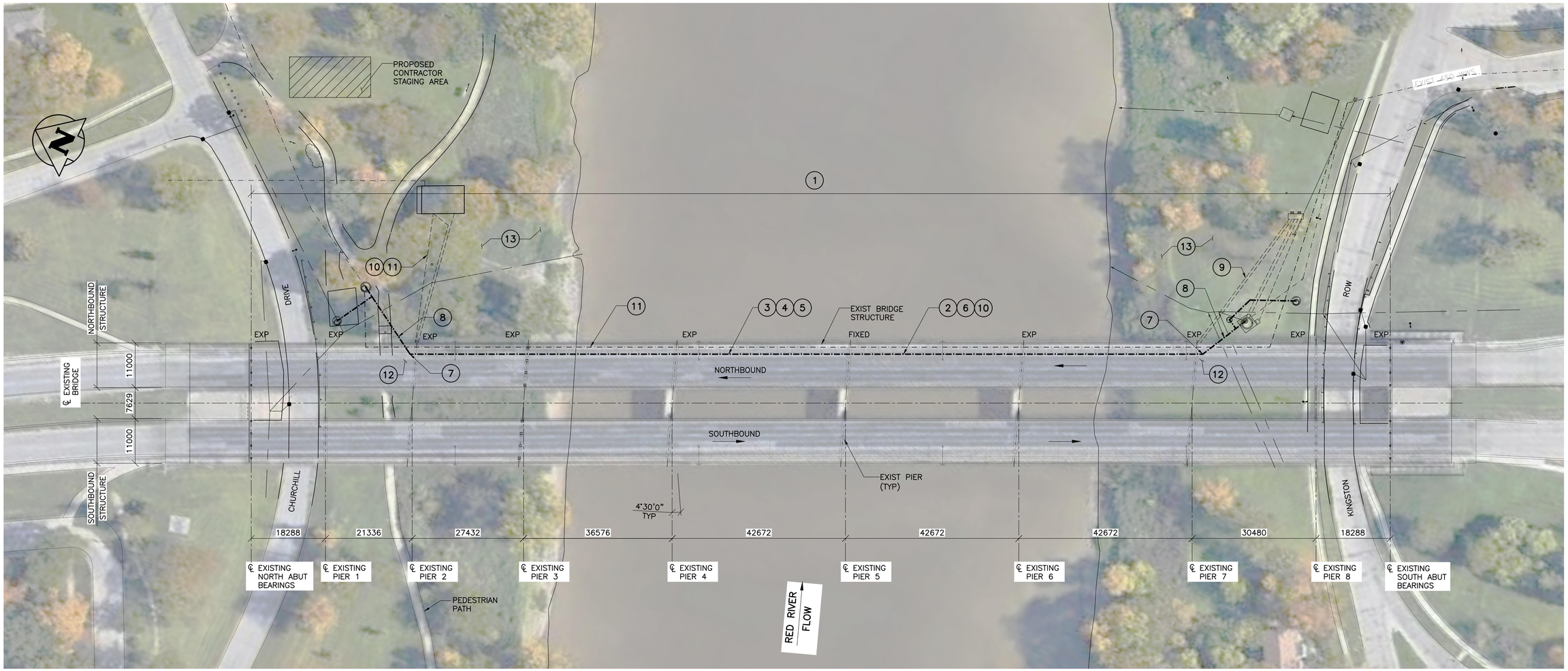

1 / – SITE PLAN – SCOPE OF WORK

1 : 500

– EXISTING UNDERGROUND UTILITIES LDS AND FM SHOWN FOR REFERENCE ONLY, IT IS NOT COMPLETE OR VERIFIED, OTHER UNDERGROUND UTILITIES NOT SHOWN

SCOPE OF WORK

ITEM	DESCRIPTION	SHEET No.	SPECIFICATION No.
1	SECURE GIRDER AND BEARING VOIDS FROM SPRING NESTING	–	E3, E6
2	REMOVE EXISTING FORCE MAIN PIPE	–	E12
3	REMOVE EXISTING STRUCTURAL PIPE SUPPORTS	9	E12
4	SUPPLY AND INSTALL STRUCTURAL PIPE SUPPORT STEEL	9–11	E13, E14, E15
5	SUPPLY AND INSTALL FORCE MAIN MISCELLANEOUS COMPONENTS	7–8	E16
6	INSTALL NEW FORCE MAIN PIPE	5–8	E16
7	SUPPLY AND INSTALL BRIDGE CONNECTION PIPING	6–7	E16, E17
8	SUPPLY AND INSTALL RIVERBANK CONNECTION PIPING	17–18	E17
9	SUPPLY AND INSTALL ELECTRICAL AND CONTROLS	12–16	E18
10	COMMISSION NEW FORCE MAIN	–	E19, E20
11	DECOMMISSION EXISTING BY–PASS SYSTEM	–	E21
12	SUPPLY AND INSTALL FORCE MAIN ENCLOSURE	7	E22
13	RESTORE SITE	19	E23

ENGINEERS GEOSCIENTISTS MANITOBA
Certificate of Authorization
Tetra Tech Canada Inc.
No. 6499

B.M. ELEV.

NO.	REVISIONS	DATE	BY
00	ISSUED FOR TENDER	20.12.22	JB

TETRA TECH

DESIGNED BY J.B. | CHECKED BY K.Y.
DRAWN BY E.V. | APPROVED BY B.M.
HOR. SCALE: AS NOTED
VERTICAL:
DATE 20.10.08
ACCEPTED BY | DATE
ORIGINAL SIGNED | 20.12.22
B. JONES, P.ENG. SENIOR PROJECT ENGINEER

ORIGINAL DRAWING REVISION "00" SEALED BY J.S. BETKE 20.12.22

CONSULTANT DRAWING NO. 2000120800–DWG–C1003

Winnipeg
THE CITY OF WINNIPEG
WATER AND WASTE DEPARTMENT

BALTIMORE FORCE MAIN PIPE CROSSING THE ST. VITAL BRIDGE

CITY DRAWING NUMBER 1–0221S–D0003–001
SHEET 3 OF 20

SCOPE OF WORK

3

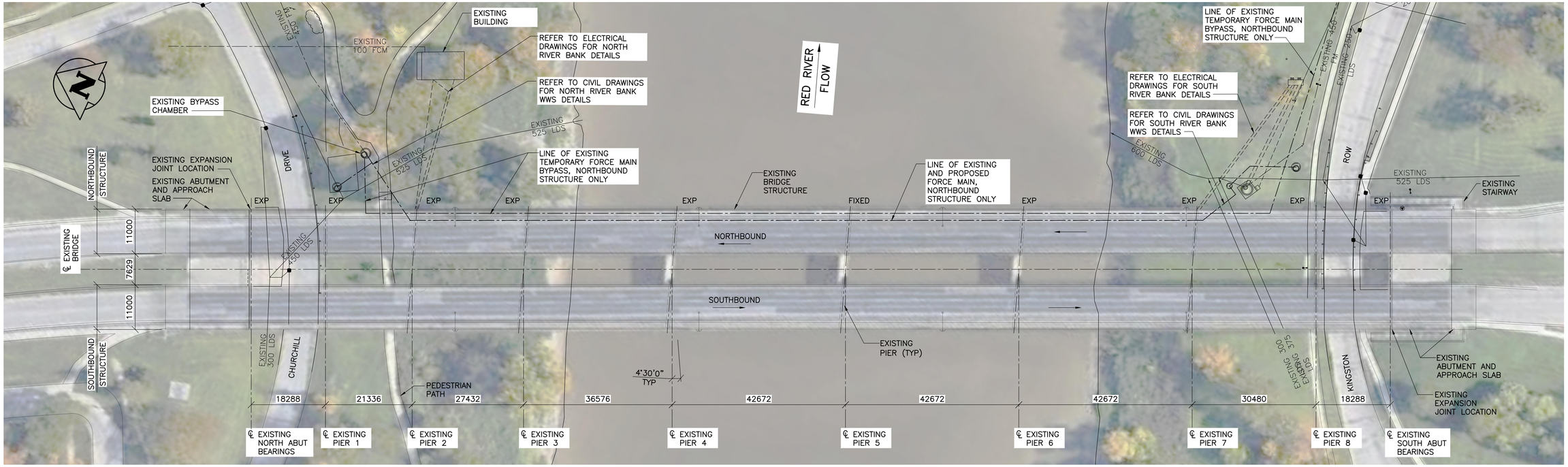

1 PLAN

1 : 500

– EXISTING UNDERGROUND UTILITIES LDS AND FM SHOWN FOR REFERENCE ONLY, IT IS NOT COMPLETE OR VERIFIED, OTHER UNDERGROUND UTILITIES NOT SHOWN

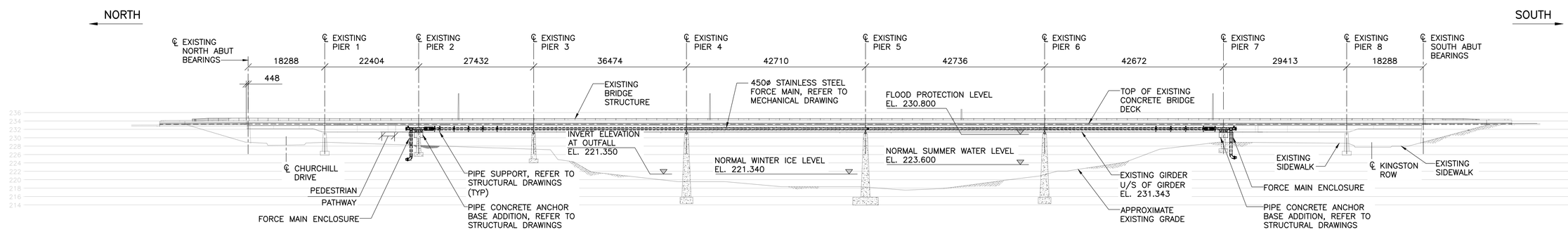

2 NORTHBOUND STRUCTURE ELEVATION LOOKING DOWNSTREAM

1 : 500

ENGINEERS GEOSCIENTISTS MANITOBA
Certificate of Authorization
Tetra Tech Canada Inc.
No. 6499

B.M. ELEV.

NO.	REVISIONS	DATE	BY
00	ISSUED FOR TENDER	20.12.22	JB

TETRA TECH

DESIGNED BY	J.B.	CHECKED BY	K.Y.
DRAWN BY	E.V.	APPROVED BY	B.M.
HOR. SCALE: VERTICAL:	AS NOTED	ACCEPTED BY / DATE	ORIGINAL SIGNED 20.12.22
DATE	20.10.08	B. JONES, P.ENG. SENIOR PROJECT ENGINEER	

ORIGINAL DRAWING REVISION "00" SEALED BY J.S. BETKE 20.12.22

CONSULTANT DRAWING NO. 2000120800–DWG–C1004

Winnipeg

THE CITY OF WINNIPEG
WATER AND WASTE DEPARTMENT

BALTIMORE FORCE MAIN PIPE CROSSING THE ST. VITAL BRIDGE

CITY DRAWING NUMBER 1–0221S–D0004–001

SHEET 4 OF 20

GENERAL ARRANGEMENT PLAN AND ELEVATION

4

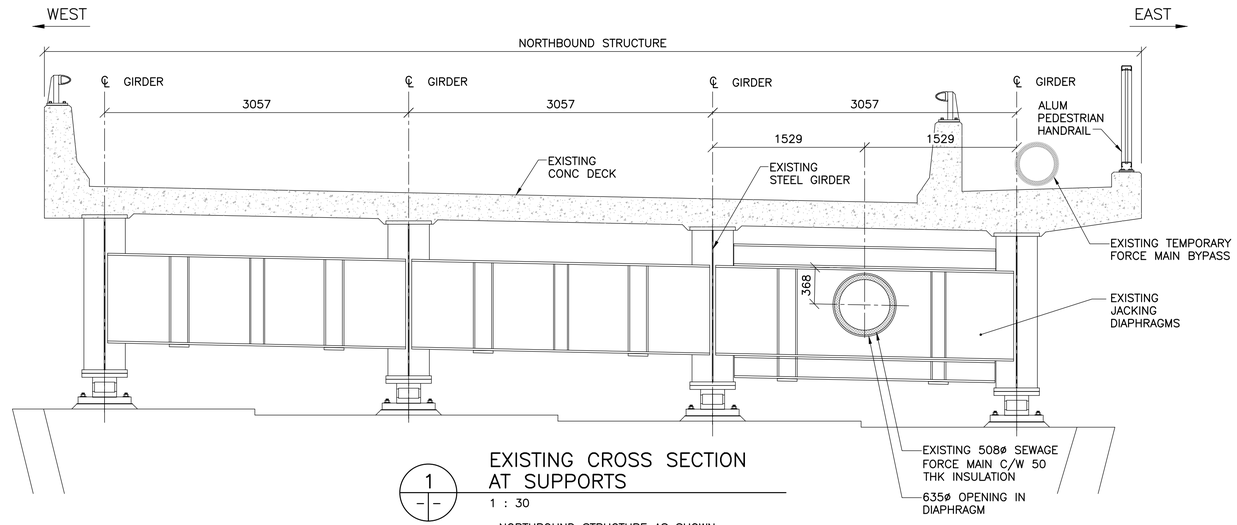

1

EXISTING CROSS SECTION AT SUPPORTS

1 : 30

NORTHBOUND STRUCTURE AS SHOWN

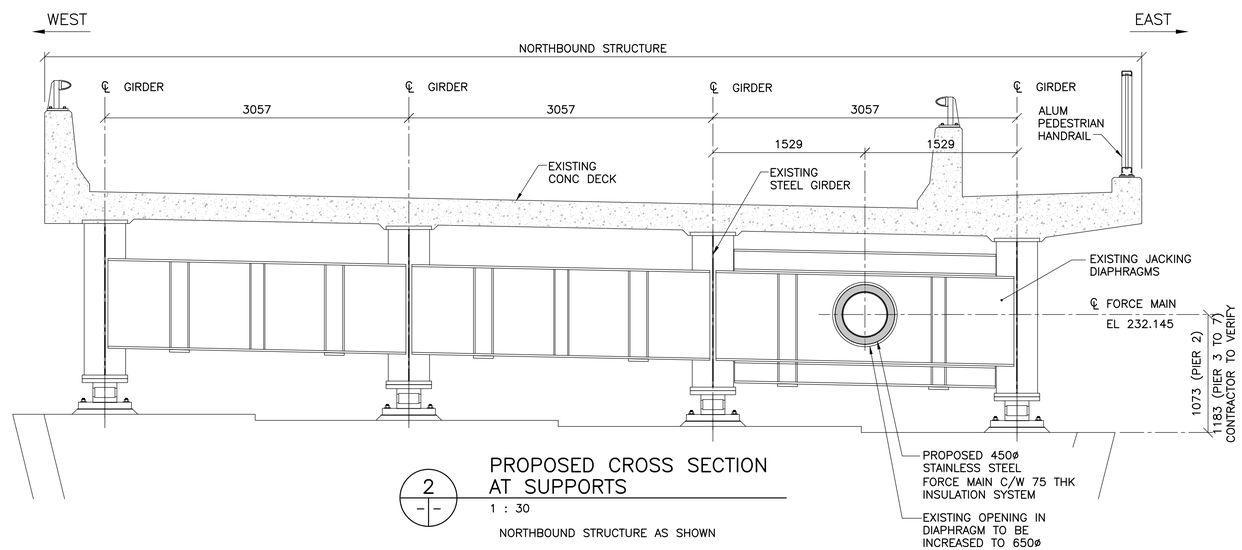

2

PROPOSED CROSS SECTION AT SUPPORTS

1 : 30

NORTHBOUND STRUCTURE AS SHOWN

ENGINEERS GEOSCIENTISTS MANITOBA
Certificate of Authorization
Tetra Tech Canada Inc.
No. 6499

B.M. ELEV.

NO.	REVISIONS	DATE	BY
00	ISSUED FOR TENDER	20.12.22	JB

TETRA TECH

DESIGNED BY	J.B.	CHECKED BY	K.Y.
DRAWN BY	E.V.	APPROVED BY	B.M.
HOR. SCALE: VERTICAL:	AS NOTED	ACCEPTED BY	DATE
		ORIGINAL SIGNED	20.12.22
DATE	20.10.08	B. JONES, P.ENG. SENIOR PROJECT ENGINEER	

ORIGINAL DRAWING REVISION "00" SEALED BY J.S. BETKE 20.12.22

CONSULTANT DRAWING NO. 2000120800-DWG-C1005

Winnipeg

THE CITY OF WINNIPEG
WATER AND WASTE DEPARTMENT

BALTIMORE FORCE MAIN PIPE CROSSING THE ST. VITAL BRIDGE

CITY DRAWING NUMBER 1-0221S-D0005-001

SHEET 5 OF 20

GENERAL ARRANGEMENT CROSS SECTIONS

5

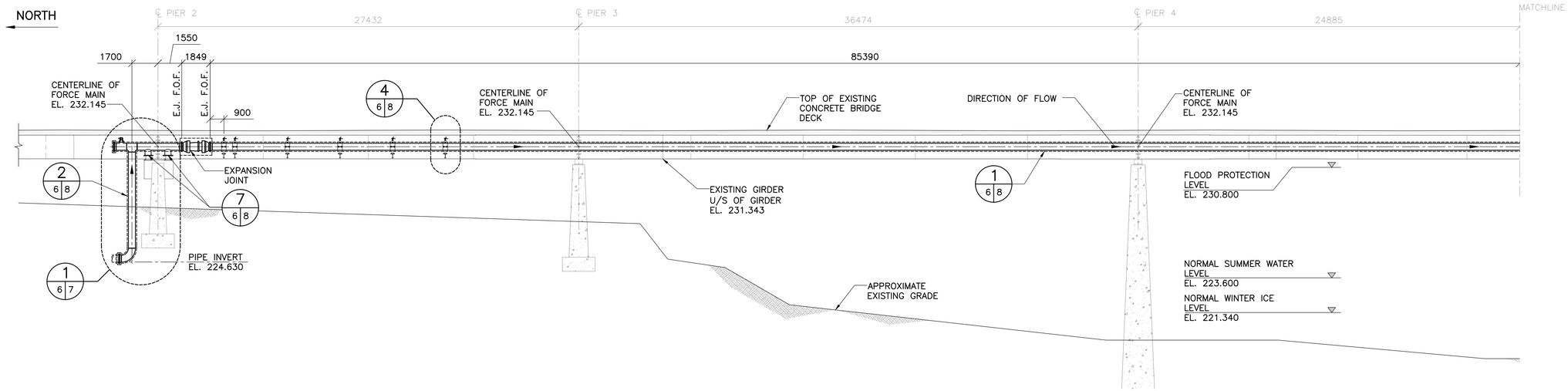

ELEVATION

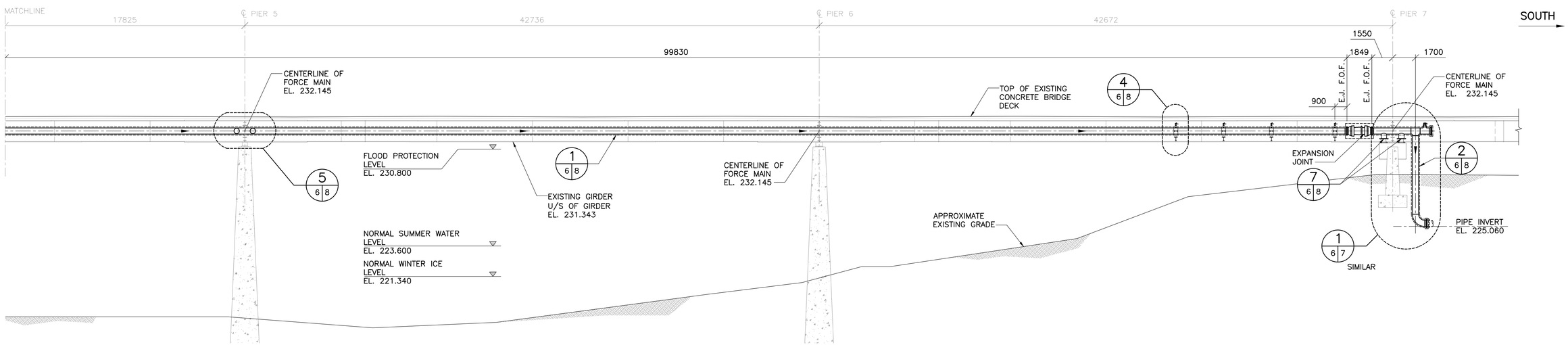

ELEVATION CONTINUED

1 / – – OVERALL FORCE MAIN ELEVATION LOOKING DOWNSTREAM

1 : 150

- SHOWN BRIDGE AND FORCE MAIN AT 0°C
- E.J. = EXPANSION JOINT, F.O.F. = FACE OF FLANGE
- INSTALL FORCE MAIN CENTERED IN EXISTING OPENINGS IN GIRDER JACKING DIAPHRAGMS (CENTERLINE EL. 232.145) AND ON PURPOSE–BUILT SUPPORT BEAMS. REFER TO STRUCTURAL DRAWINGS.

NOTE:
FORCE MAIN ON NORTHBOUND STRUCTURE ONLY

1:150 3 2 1 0 2 4 6m

ENGINEERS GEOSCIENTISTS MANITOBA
Certificate of Authorization
Tetra Tech Canada Inc.
No. 6499

B.M. ELEV.

NO.	REVISIONS	DATE	BY
00	ISSUED FOR TENDER	20.12.22	RL

TETRA TECH

DESIGNED BY	R.L.	CHECKED BY	K.Y.
DRAWN BY	E.V.	APPROVED BY	B.M.
HOR. SCALE:	AS NOTED	ACCEPTED BY	DATE
VERTICAL:		ORIGINAL SIGNED	20.12.22
DATE	20.10.08	B. JONES, P.ENG. SENIOR PROJECT ENGINEER	

ORIGINAL DRAWING REVISION "00" SEALED BY R.C. LOEWEN 20.12.22

CONSULTANT DRAWING NO. 2000120800–DWG–M1001

Winnipeg

THE CITY OF WINNIPEG
WATER AND WASTE DEPARTMENT

BALTIMORE FORCE MAIN PIPE CROSSING THE ST. VITAL BRIDGE

CITY DRAWING NUMBER 1–0221S–M0001–001

SHEET 6 OF 20

MECHANICAL
NPS 18 FORCE MAIN ACROSS BRIDGE
ELEVATION

6

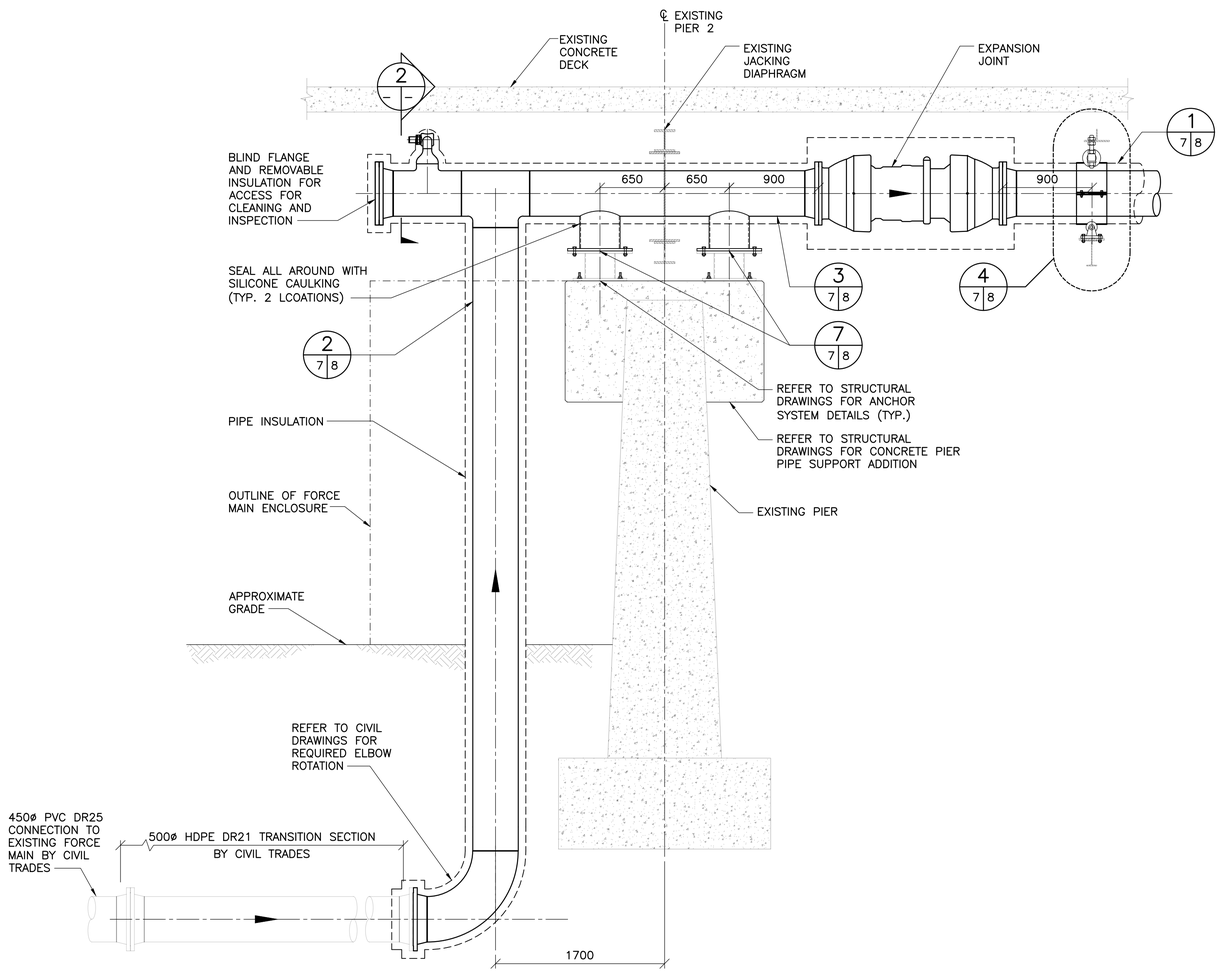

1 / 6 7 DETAIL

1 : 30

– PIER 2 (NORTH SIDE) SHOWN, FORCE MAIN ENCLOSURE OUTLINE SHOWN ONLY FOR CLARITY
– PIER 7 (SOUTH SIDE) SIMILAR

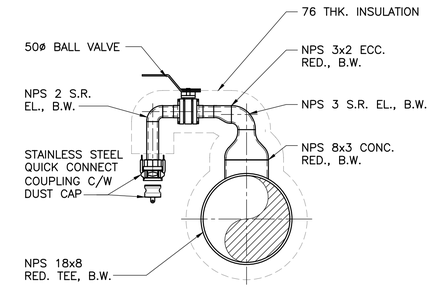

2 / – – SECTION

1 : 15

1:15 300 0 300 600mm

1:30 600 0 600 1200mm

ENGINEERS GEOSCIENTISTS MANITOBA
Certificate of Authorization
Tetra Tech Canada Inc.
No. 6499

B.M. ELEV.

NO.	REVISIONS	DATE	BY
00	ISSUED FOR TENDER	20.12.22	RL

TETRA TECH

DESIGNED BY	R.L.	CHECKED BY	K.Y.
DRAWN BY	E.V.	APPROVED BY	B.M.
HOR. SCALE: / VERTICAL:	AS NOTED	ACCEPTED BY	DATE
		ORIGINAL SIGNED	20.12.22
DATE	20.10.08	B. JONES, P.ENG. SENIOR PROJECT ENGINEER	

ORIGINAL DRAWING REVISION "00" SEALED BY R.C. LOEWEN 20.12.22

CONSULTANT DRAWING NO.
2000120800–DWG–M1002

Winnipeg
THE CITY OF WINNIPEG
WATER AND WASTE DEPARTMENT

BALTIMORE FORCE MAIN PIPE CROSSING THE ST. VITAL BRIDGE

CITY DRAWING NUMBER 1–0221S–M0002–001

SHEET 7 OF 20

MECHANICAL
NPS 18 FORCE MAIN ACROSS BRIDGE
DETAILS – SHEET 1 OF 2

7

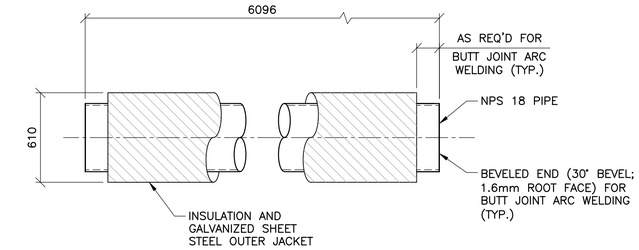

1 / 6, 7 & 8 | 8 — TYP. TYPE 1 PRE–INSULATED PIPE SPOOL

1 : 20

QUANTITY SUPPLIED THRU BID OPPORTUNITY 799–2020: 34

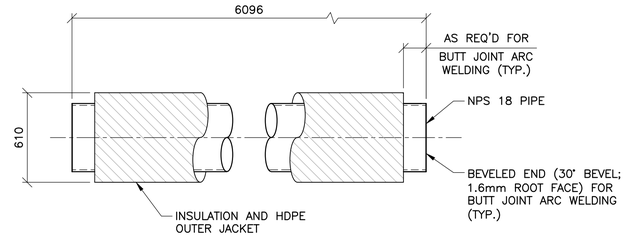

2 / 6 & 7 | 8 — TYP. TYPE 2 PRE–INSULATED PIPE SPOOL

1 : 20

QUANTITY SUPPLIED THRU BID OPPORTUNITY 799–2020: 3

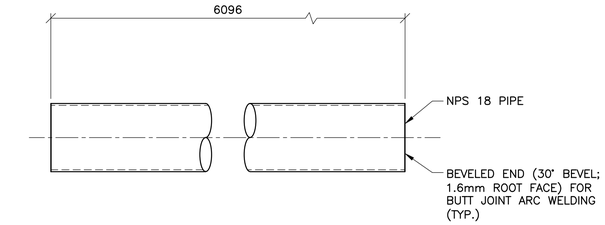

3 / 7 & 8 | 8 — TYP. UN–INSULATED PIPE SPOOL

1 : 20

QUANTITY SUPPLIED THRU BID OPPORTUNITY 799–2020: 2

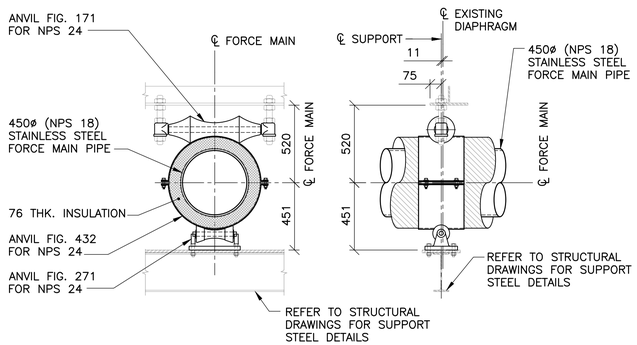

NOTE:
ALL ANVIL ITEMS AND FASTENERS
TO BE HOT DIPPED GALVANIZED.

SECTION VIEW

ELEVATION VIEW

4 / 6 & 7 | 8 — TYP. FORCE MAIN SUPPORT/GUIDE DETAIL

1 : 20

QUANTITY REQUIRED: 54

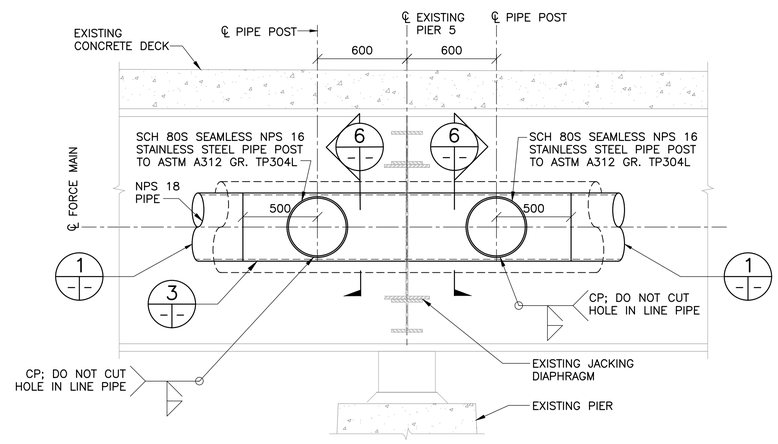

5 / 6 | 8 — PIPE ANCHOR DETAILS

1 : 20

– AT PIER 5

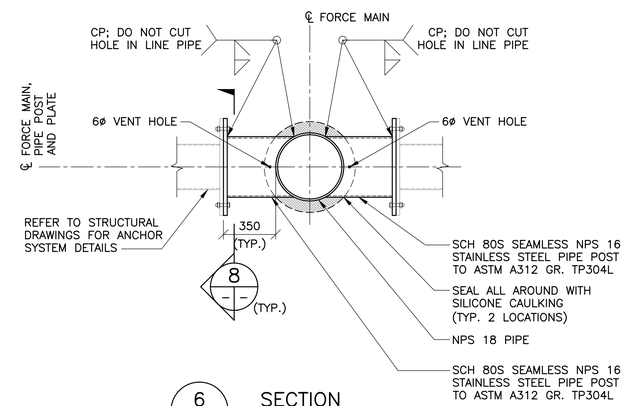

6 / – | – — SECTION

1 : 20

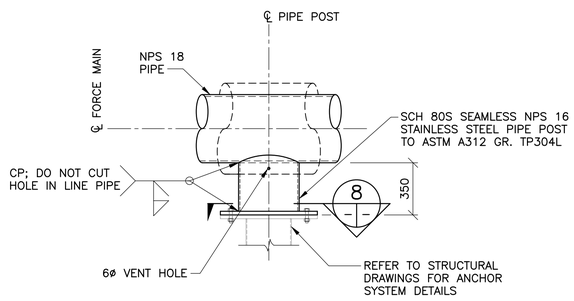

7 / 6 & 7 | 8 — PIPE ANCHOR DETAILS

1 : 20

– AT PIERS 2 & 7

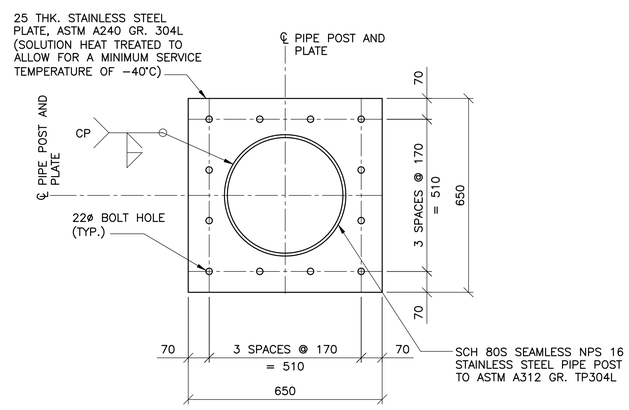

8 / – | – — SECTION

1 : 10

NOTE:
ALL WELDS SHALL HAVE COMPLETE JOINT
PENETRATION.

1:10 — 100 0 100 300 500mm

1:20 — 200 0 200 600 1000mm

ENGINEERS GEOSCIENTISTS MANITOBA
Certificate of Authorization
Tetra Tech Canada Inc.
No. 6499

B.M.
ELEV.

NO.	REVISIONS	DATE	BY
00	ISSUED FOR TENDER	20.12.22	RL

TETRA TECH

DESIGNED BY	R.L.	CHECKED BY	K.Y.
DRAWN BY	E.V.	APPROVED BY	B.M.
HOR. SCALE: / VERTICAL:	AS NOTED	ACCEPTED BY / DATE	ORIGINAL SIGNED 20.12.22
DATE	20.10.08	R. JONES, P.ENG. SENIOR PROJECT ENGINEER	

ORIGINAL DRAWING
REVISION "00" SEALED BY
R.C. LOEWEN
20.12.22

CONSULTANT DRAWING NO.
2000120800–DWG–M1003

Winnipeg

THE CITY OF WINNIPEG
WATER AND WASTE DEPARTMENT

BALTIMORE FORCE MAIN PIPE CROSSING
THE ST. VITAL BRIDGE

CITY DRAWING NUMBER
1–0221S–M0002–002

SHEET 8 OF 20

MECHANICAL
NPS 18 FORCE MAIN ACROSS BRIDGE
DETAILS – SHEET 2 OF 2

8

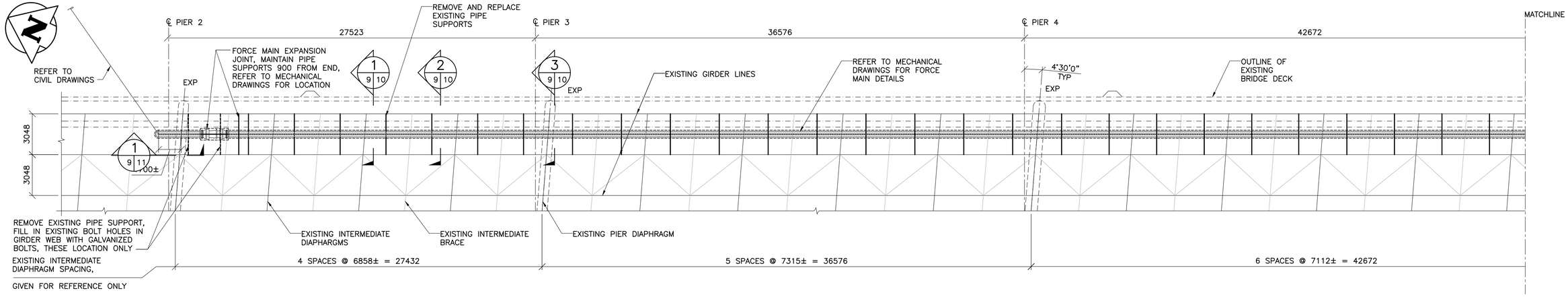

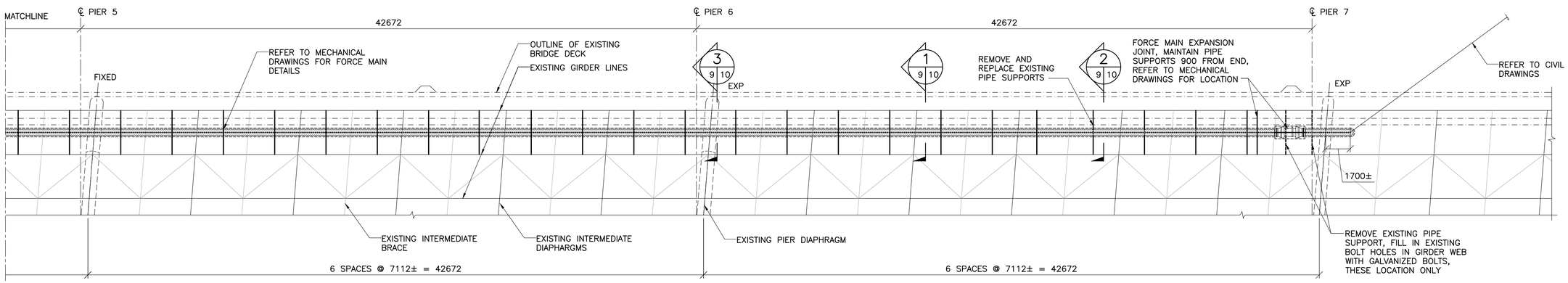

1 OVERALL PARTIAL EXISTING GIRDER LAYOUT

1 : 150

– NORTHBOUND STRUCTURE NORTHMOST EXTERIOR AND INTERIOR GIRDER LINES

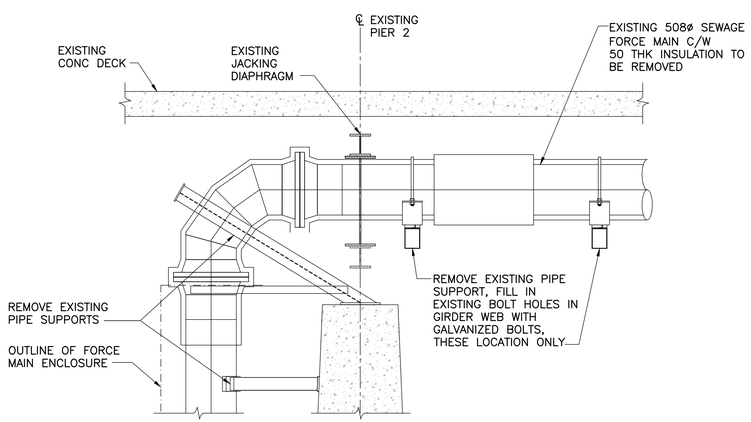

2 SECTION AT PIER 2 – EXISTING

1 : 30

– PIER 2 (NORTH SIDE) SHOWN
– SIMILAR AT PIER 7

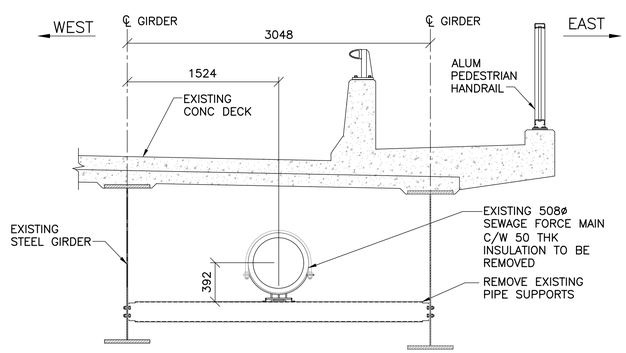

3 EXISTING CROSS SECTION AT FORCE MAIN SUPPORT DIAPHARGM

1 : 30

NORTHBOUND STRUCTURE AS SHOWN

GENERAL STRUCTURAL STEEL NOTES:

1. REMOVE EXISTING FORCE MAIN PIPE PRIOR TO THE DISASSEMBLY OR REMOVAL OF ANY EXISTING STRUCTURAL SUPPORTS.
2. DISASSEMBLE AND REMOVE EXISTING STRUCTURAL SUPPORT SYSTEMS WITH CARE TAKEN TO PROTECT THE EXISTING BRIDGE GIRDERS, DIAPHRAGMS, AND OTHER ELEMENTS FROM ANY DAMAGE OR IMPACT TO DURABILITY.
3. OPENINGS IN EXISTING JACKING DIAPHRAGMS TO BE INCREASED AT EACH OF PIERS 3 TO 6 AND MODIFICATIONS TO EXISTING CONCRETE PIERS TO BE COMPLETED PRIOR TO THE INSTALLATION OF THE NEW FORCE MAIN PIPE.
4. FAYING SURFACES OF THE EXISTING GIRDER WEBS TO RECEIVE NEW BOLTED CONNECTIONS SHALL BE CLEANED AND ROUGHENED IN ACCORDANCE WITH SSPC SPECIFICATION SP6 – "COMMERCIAL BLAST CLEANING". ROUGHENED SURFACES SHALL RECEIVE INORGANIC ZINC PRIMER WITH A "CLASS A" OR "CLASS B" SLIP COEFFICIENT, APPLIED AND ALLOWED TO CURE IN ACCORDANCE WITH MANUFACTURER DIRECTIONS PRIOR TO FIT–UP OF BOLTED CONNECTIONS.
5. FAYING SURFACES OF THE NEW GALVANIZED STEEL ELEMENTS TO RECEIVE BOLTED CONNECTIONS SHALL BE CLEANED AND ROUGHENED BY HAND USING A WIRE BRUSH PRIOR TO FIT–UP.
6. SUPPORT MEMBERS TO BE FIT–UP AND ALL BOLTS SNUG–TIGHTENED, THEN EACH BOLT TIGHTENED USING THE TURN–OF–NUT METHOD.
7. REFER TO SPECIFICATION E15 – FORCE MAIN STRUCTURAL STEEL SUPPORT SYSTEM

ENGINEERS GEOSCIENTISTS MANITOBA
Certificate of Authorization
Tetra Tech Canada Inc.
No. 6499

B.M. ELEV.

NO.	REVISIONS	DATE	BY
00	ISSUED FOR TENDER	20.12.22	JB

TETRA TECH

DESIGNED BY	J.B.	CHECKED BY	K.Y.
DRAWN BY	E.V.	APPROVED BY	B.M.
HOR. SCALE: / VERTICAL:	AS NOTED	ACCEPTED BY / DATE	ORIGINAL SIGNED 20.12.22
DATE	20.10.08	B. JONES, P.ENG. SENIOR PROJECT ENGINEER	

ORIGINAL DRAWING REVISION "00" SEALED BY J.S. BETKE 20.12.22

CONSULTANT DRAWING NO. 2000120800–DWG–S1001

Winnipeg

THE CITY OF WINNIPEG
WATER AND WASTE DEPARTMENT

BALTIMORE FORCE MAIN PIPE CROSSING THE ST. VITAL BRIDGE

CITY DRAWING NUMBER 1–0221S–S0001–001

SHEET 9 OF 20

STRUCTURAL
OVERALL EXISTING GIRDER PLAN

9

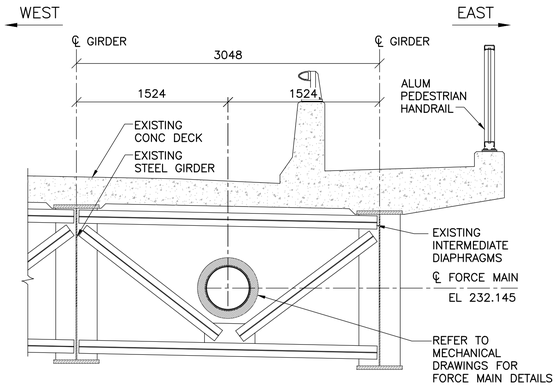

1 / 9|10 — TYPICAL SECTION AT INTERMEDIATE DIAPHRAGMS

1 : 30

NORTHBOUND STRUCTURE AS SHOWN

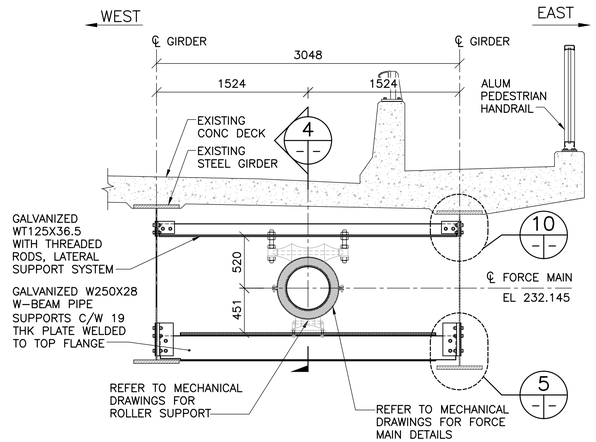

2 / 9|10 — TYPICAL SECTION AT PIPE SUPPORT LOCATIONS

1 : 30

NORTHBOUND STRUCTURE AS SHOWN

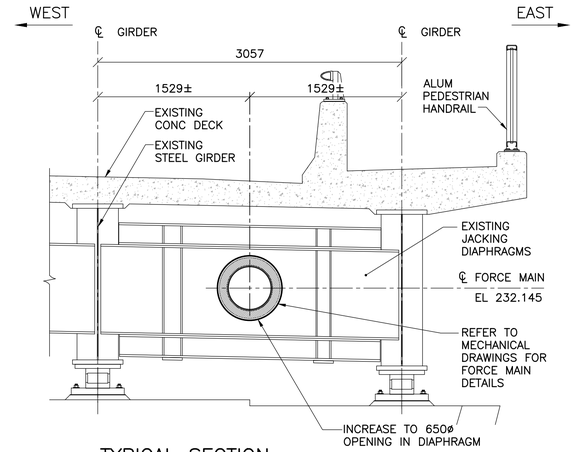

3 / 9|10 — TYPICAL SECTION AT PIERS (EXCEPT AT 2, 5 & 7)

1 : 30

NORTHBOUND STRUCTURE AS SHOWN

BILL OF MISCELLANEOUS METAL

No.	DESCRIPTION	SUB–DESCRIPTION
54	W250x28 W–BEAM	LOWER PIPE SUPPORT MEMBER
54	WT125X36.5	UPPER PIPE SUPPORT MEMBER
54	2565X255X19 THK PL	LOWER PIPE SUPPORT CONNECTION FLANGE PLATE
108	WT155X79	LOWER PIPE SUPPORT CONNECTION MEMBER
108	WT180X22.5	UPPER PIPE SUPPORT CONNECTION MEMBER
108	310X330X9.5 THK PL	LOWER PIPE SUPPORT CONNECTION BACK PLATE
108	170X150X9.5 THK PL	UPPER PIPE SUPPORT CONNECTION BACK PLATE
216	17.5øX76.2 LONG GALVANIZED BOLT	BOLT C/W NUTS AND WASHERS
128	19øX88.9 LONG GALVANIZED BOLT	BOLT C/W NUTS AND WASHERS
648	19øX76.2 LONG GALVANIZED BOLT	BOLT C/W NUTS AND WASHERS
648	19øX63.5 LONG GALVANIZED BOLT	BOLT C/W NUTS AND WASHERS
216	19øX51 LONG GALVANIZED BOLT	BOLT C/W NUTS AND WASHERS
32	19øX335 LONG GALVANIZED ANCHOR BOLT	CAST IN PLACE BOLT C/W NUTS AND WASHERS
432	54øX10 THK PLATE WASHER	PLATE WASHER
108	38øX350 LONG GALVANIZED THREADED ROD	THREADED ROD C/W BUTS AND WASHERS
4	HSS 305X305X8.0, 250 LONG	LOWER PIPE ANCHOR SUPPORT (PIER 2 & 7)
4	HSS 305X305X8.0, 895 LONG	PIPE ANCHOR SYSTEM (PIER 5)
8	650X650X25 THK	PLATE FOR PIPE ANCHOR SYSTEMS
12	540X540X25 THK	PLATE FOR PIPE ANCHOR SYSTEMS
32*	19øX63.5 LONG GALVANIZED BOLT	BOLT C/W NUTS AND WASHERS

– QUANTITIES STATED ARE BASED ON 54 PIPE SUPPORTS. CONTRACTOR TO CONFIRM AMOUNT OF EXISTING PIPE SUPPORT LOCATIONS PRIOR TO FABRICATION.
– BOLTS QUANTITY STATED ARE FOR 54 PIPE SUPPORTS
– *BOLTS QUANTITY STATED ARE FOR REMOVAL OF 4 EXISTING PIPE SUPPORTS AND THE REQUIRED BOLTS TO FILL EXISTING EMPTY GIRDER WEB HOLES.
– REFER TO SHEET 10 AND 11 FOR SECTIONS AND DETAILS.

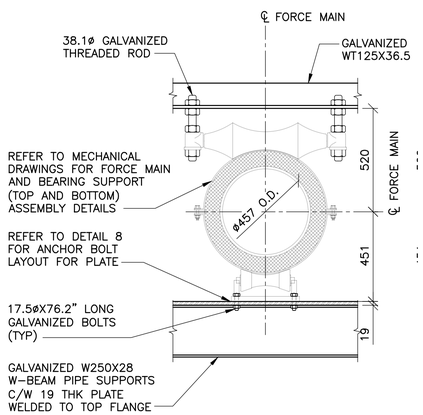

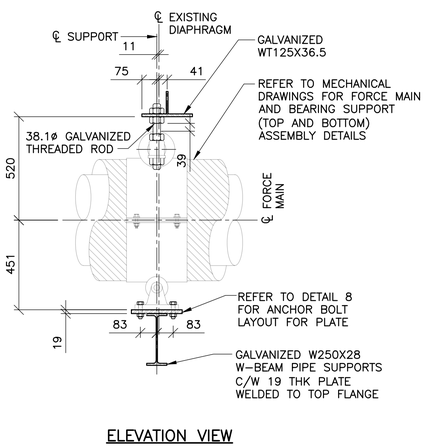

4 / –|– — FORCE MAIN SUPPORT DETAIL AT PIPE SUPPORT LOCATIONS

1 : 15

NORTHBOUND STRUCTURE ONLY

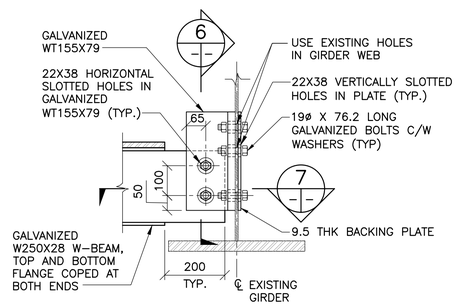

5 / –|– — W–BEAM TO EXISTING GIRDER CONNECTION DETAIL

1 : 10

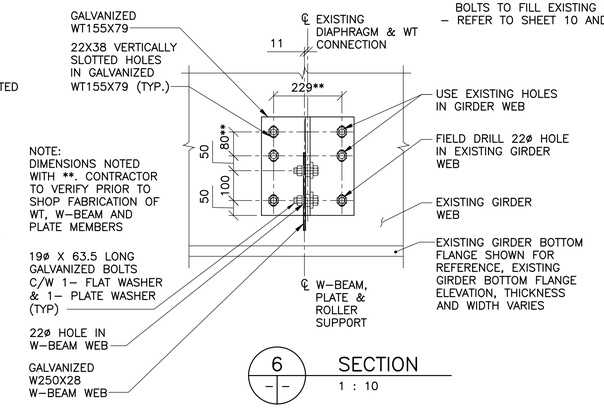

6 / –|– — SECTION

1 : 10

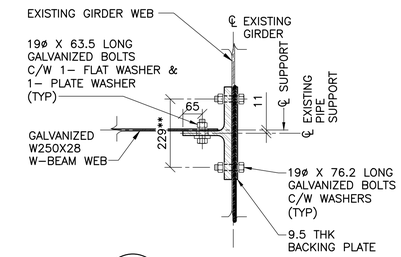

7 / –|– — SECTION

1 : 10

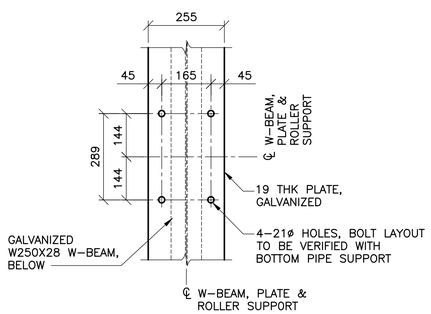

8 / –|– — BOLT HOLE LAYOUT FOR ROLLER SUPPORT

1 : 10

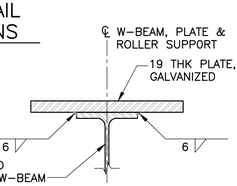

9 / –|– — W–BEAM & PLATE CONNECTION

1 : 5

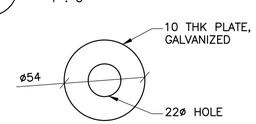

13 / –|– — PLATE WASHER DETAIL

1 : 2

– 8 REQUIRED AT EACH PIPE SUPPORT LOCATION
– INSTALLED OVER EACH HORIZONTAL SLOTTED HOLE

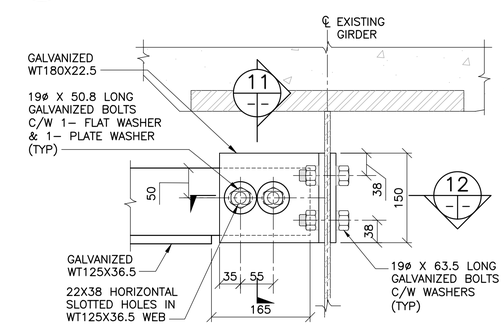

10 / –|– — WT TO EXISTING GIRDER CONNECTION DETAIL

1 : 5

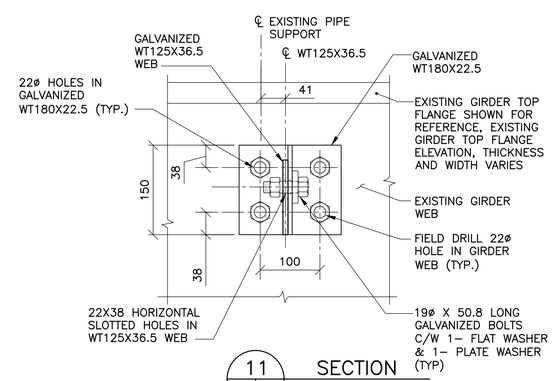

11 / –|– — SECTION

1 : 5

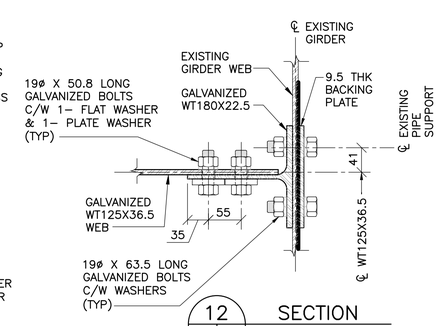

12 / –|– — SECTION

1 : 5

ENGINEERS GEOSCIENTISTS MANITOBA
Certificate of Authorization
Tetra Tech Canada Inc.
No. 6499

B.M. ELEV.

NO.	REVISIONS	DATE	BY
00	ISSUED FOR TENDER	20.12.22	JB

TETRA TECH

DESIGNED BY J.B. | CHECKED BY K.Y.
DRAWN BY E.V. | APPROVED BY B.M.
HOR. SCALE: AS NOTED
VERTICAL:
DATE 20.10.08
ACCEPTED BY DATE
ORIGINAL SIGNED 20.12.22
B. JONES, P.ENG. SENIOR PROJECT ENGINEER

ORIGINAL DRAWING REVISION "00" SEALED BY J.S. BETKE 20.12.22

CONSULTANT DRAWING NO. 2000120800–DWG–S1002

Winnipeg

THE CITY OF WINNIPEG
WATER AND WASTE DEPARTMENT

BALTIMORE FORCE MAIN PIPE CROSSING
THE ST. VITAL BRIDGE

CITY DRAWING NUMBER 1–0221S–S0002–001
SHEET 10 OF 20

STRUCTURAL
EXISTING GIRDER MODIFICATION SECTIONS
SHEET 1 OF 2

10

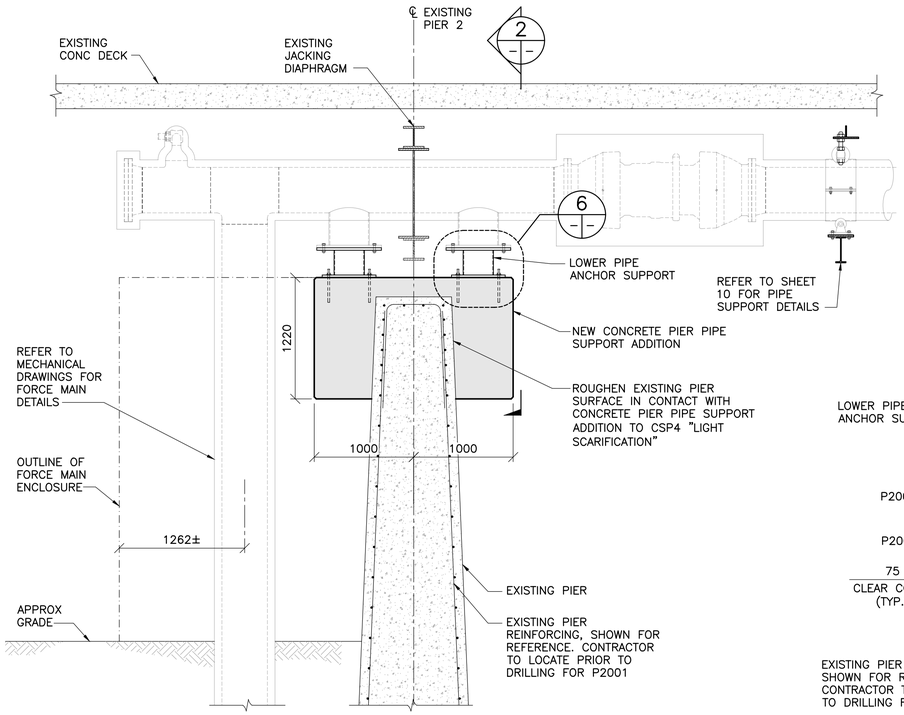

1 (9|11) SECTION AT PIER 2

1 : 30

– PIER 2 (NORTH SIDE) SHOWN, FORCE MAIN ENCLOSURE OUTLINE SHOWN ONLY FOR CLARITY
– SIMILAR AT PIER 7

NOTES:

1. ALL DIMENSIONS ARE OUT–TO–OUT OF A BAR EXCEPT "A" AND "G" ON STANDARD 180° AND 135° HOOKS
2. "J" DIMENSION ON 180° HOOKS TO BE SHOWN ONLY WHERE NECESSARY TO RESTRICT HOOK SIZE. OTHERWISE STANDARD HOOKS TO BE USED.
3. ON TRUSS BARS "J" WILL BE KEPT EQUAL TO OR LESS THAN "H" . WHERE "J" CAN EXCEED "H" IT SHOULD BE SHOWN.
4. ON STIRRUPS "H" DIMENSION SHOULD BE SHOWN ONLY WHERE NECESSARY TO FIT WITHIN CONCRETE.
5. CRITICAL DIMENSIONS ARE TO BE WHERE BARS ARE TO BE BENT MORE ACCURATELY THAN STANDARD BENDING TOLERANCE.
6. ON TYPE T3 "G" IS EQUAL TO CLASS B SPLICE.
7. FIGURES SHOWN IN CIRCLES SHOW TYPES.
8. ALL BAR BENDS OTHER THAN THE TYPES SHOWN MUST BE DESIGNATED AS TYPE "X".
9. STAINLESS STEEL REINFORCING SHALL BE FABRICATED IN ACCORDANCE WITH THE LATEST EDITION OF THE REINFORCEMENT STEEL MANUAL OF STANDARD PRACTICE BY THE REINFORCING STEEL INSTITUTE OF CANADA (RSIC), TO THE LENGTHS AND SHAPES AS SHOWN ON THE DRAWINGS.

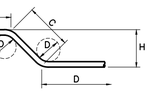

UNLESS OTHERWISE NOTED DIAMETER "D" IS THE SAME ALL HOOKS AND BENDS ON A BAR. WHERE SLOPE DIFFERS FROM 45° DIMENSIONS "H" AND "K" MUST BE SHOWN

ENLARGED VIEW BAR BENDING DETAILS

BILL OF REINFORCING – BLACK STEEL BARS

MARK	NO. BARS	SIZE	LENGTH	TYPE	A	B	C	D	E	F	G	H	J	K	O	R	TOTAL (m)	MASS (kg)
P2001	40	20	1100	2	300	800											44.00	103.62
P2002	16	20	1650	2	300	1050	300										26.40	62.17
P2003	48	20	2140	2	850	440	850										102.72	241.91
P2004	12	20	3990	2	1070	1850	1070										47.88	112.76
P2005	22	20	850	STR													18.70	44.04
																TOTAL MASS		564.50

BENDING DIAGRAMS:

2 A B G

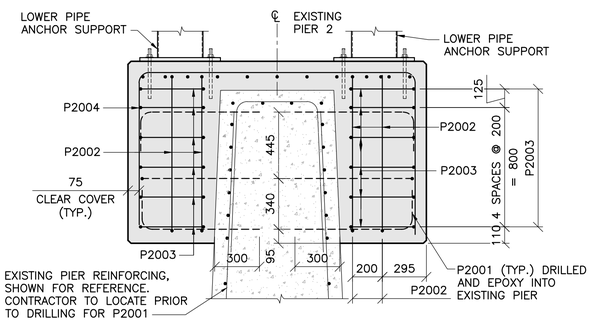

4 CONCRETE PIER PIPE SUPPORT ADDITION REINF SECTION

1 : 20

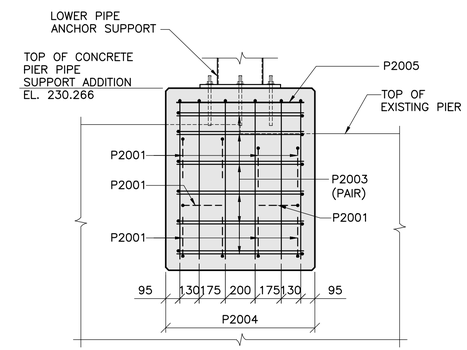

5 CONCRETE PIER PIPE SUPPORT ADDITION REINF DETAIL

1 : 20

– SHOWN AT PIER SU.2, SU.7 SIMILAR

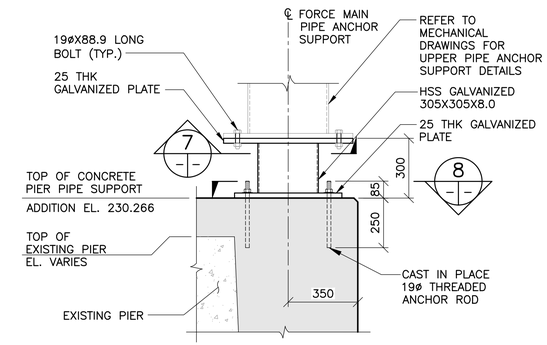

6 LOWER PIPE ANCHOR SUPPORT DETAIL AT 2 & 7

1 : 15

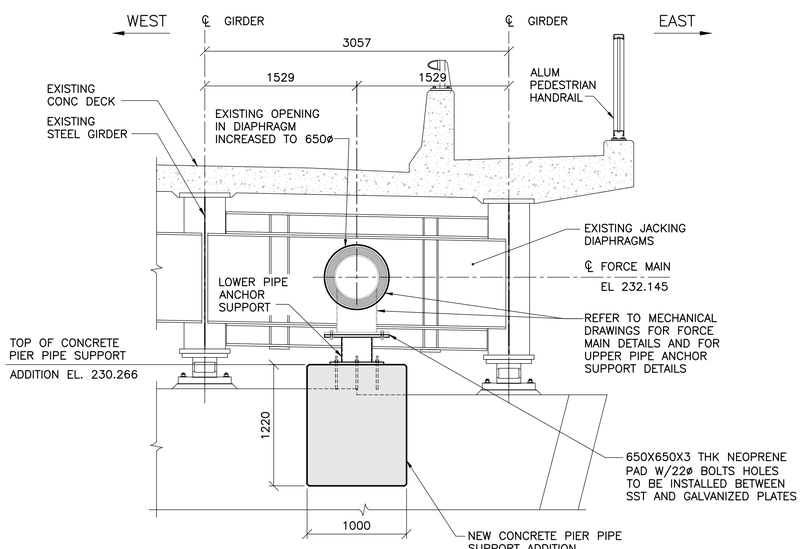

2 (–|–) SECTION AT PIERS 2 & 7

1 : 30

– SHOWN AT PIER SU.2, SU.7 SIMILAR

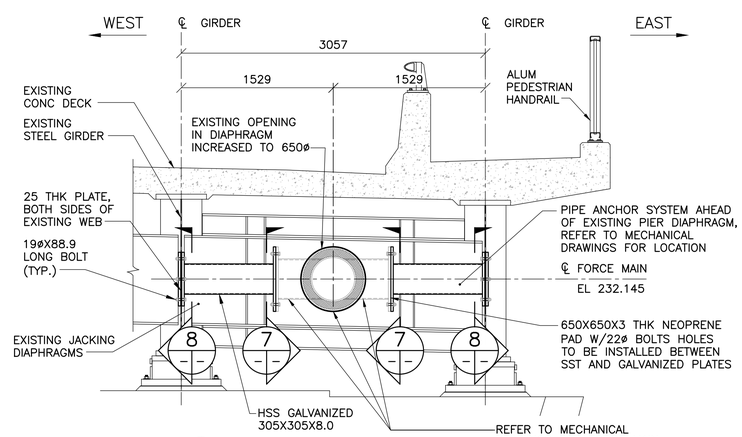

3 (–|–) SECTION AT PIER 5

1 : 30

– ON BOTH SIDES OF EXISTING PIER SU.5, REFER TO SECTION 5 ON SHEET 8.

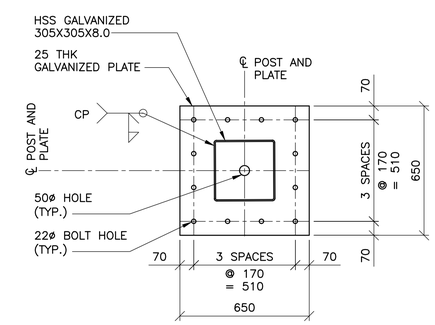

7 (–|–) SECTION

1 : 10

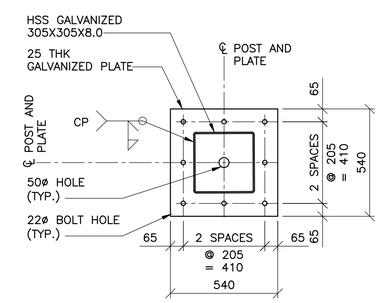

8 (–|–) SECTION

1 : 15

B.M.
ELEV.

NO.	REVISIONS	DATE	BY
00	ISSUED FOR TENDER	20.12.22	JB

ENGINEERS GEOSCIENTISTS MANITOBA
Certificate of Authorization
Tetra Tech Canada Inc.
No. 6499

TETRA TECH

DESIGNED BY	J.B.	CHECKED BY	K.Y.
DRAWN BY	E.V.	APPROVED BY	B.M.
HOR. SCALE: VERTICAL:	AS NOTED	ACCEPTED BY / DATE	ORIGINAL SIGNED 20.12.22
DATE	20.10.08	B. JONES, P.ENG. SENIOR PROJECT ENGINEER	

ORIGINAL DRAWING REVISION "00" SEALED BY J.S. BETKE 20.12.22

CONSULTANT DRAWING NO. 2000120800–DWG–S1003

Winnipeg

THE CITY OF WINNIPEG
WATER AND WASTE DEPARTMENT

BALTIMORE FORCE MAIN PIPE CROSSING THE ST. VITAL BRIDGE

CITY DRAWING NUMBER 1–0221S–S0002–002

SHEET 11 OF 20

STRUCTURAL
EXISTING GIRDER MODIFICATION SECTIONS
SHEET 2 OF 2

11

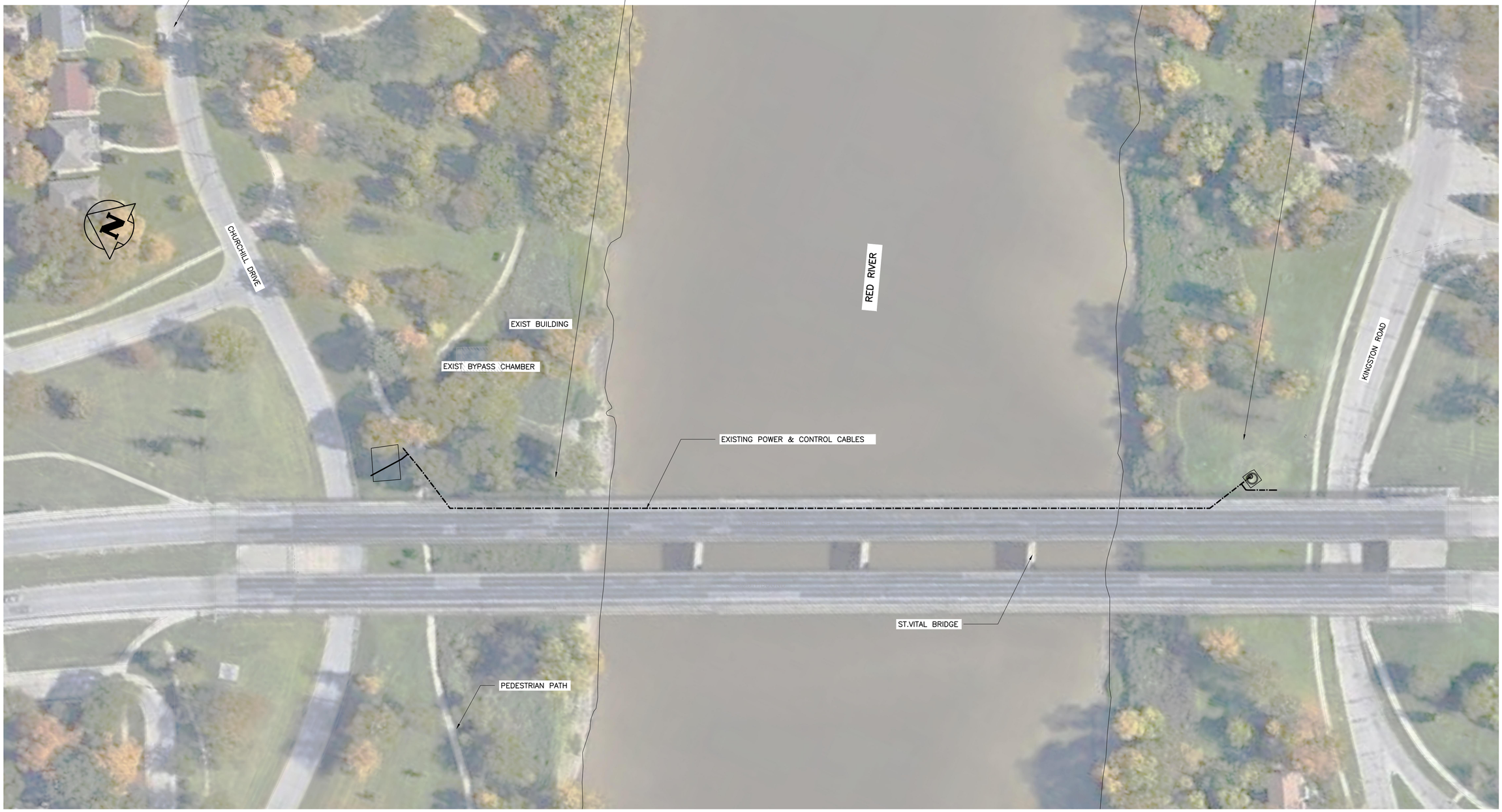

1 ELECTRICAL SITE PLAN
1 : 500

ENGINEERS GEOSCIENTISTS MANITOBA
Certificate of Authorization
Tetra Tech Canada Inc.
No. 6499

B.M. ELEV.

NO.	REVISIONS	DATE	BY
00	ISSUED FOR TENDER	20.12.22	DWD

TETRA TECH

DESIGNED BY	DWD	CHECKED BY	DWD
DRAWN BY	MG	APPROVED BY	B.M.
HOR. SCALE: VERTICAL:	1 : 500	ACCEPTED BY	DATE
		ORIGINAL SIGNED	20.12.22
DATE	20.11.25	B. JONES, P.ENG. SENIOR PROJECT ENGINEER	

ORIGINAL DRAWING REVISION "00" SEALED BY D.W. DOWHAN 20.12.22

CONSULTANT DRAWING NO.
2000120800-DWG-E1001

Winnipeg
THE CITY OF WINNIPEG
WATER AND WASTE DEPARTMENT

BALTIMORE FORCE MAIN PIPE CROSSING THE ST. VITAL BRIDGE

CITY DRAWING NUMBER 1-0221S-E0001-001
SHEET 12 OF 20

ELECTRICAL SITE PLAN

12

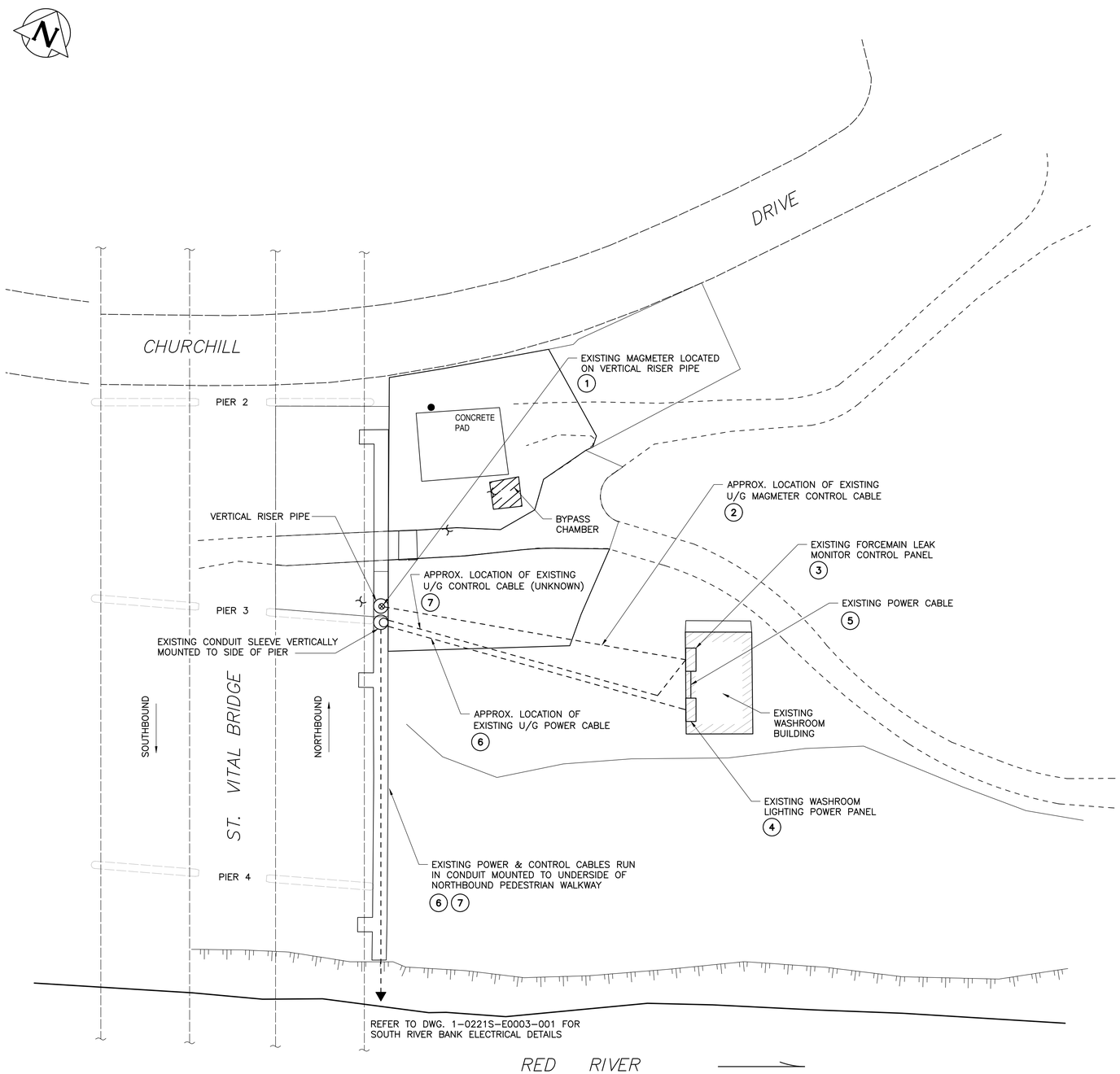

ELECTRICAL SCOPE OF WORK NOTES:

1. DISCONNECT AND DECOMMISSION EXISTING NORTH SIDE FORCEMAIN LEAK MONITORING MAGMETER FLOWTUBE LOCATED ON VERTICAL RISER PIPE.
2. DISCONNECT AND ABANDON EXISTING U/G CONTROL CABLES PRESENTLY CONNECTED BETWEEN MAGMETER FLOWTUBE ON VERTICAL RISER PIPE AND MAGMETER TRANSMITTER MOUNTED IN EXISTING NORTH SIDE FORCEMAIN LEAK MONITOR CONTROL PANEL.
3. DISCONNECT AND DECOMMISSION EXISTING NORTH SIDE FORCEMAIN LEAK MONITOR CONTROL PANEL WALL MOUNTED IN EXISTING CITY OF WINNIPEG PUBLIC WORKS DEPARTMENT WASHROOM BUILDING.
4. DISCONNECT AND RELIABLE AS “SPARE” EXISTING 15A,1P CIRCUIT BREAKER IN EXISTING WASHROOM BUILDING 120/240 VAC POWER PANEL PRESENTLY FEEDING DECOMMISSIONED NORTH SIDE FORCEMAIN LEAK MONITOR CONTROL PANEL. EXISTING 15A,1P CIRCUIT BREAKER PRESENTLY FEEDING EXISTING SOUTH SIDE FORCEMAIN LEAK MONITOR REMOTE PANEL TO BE RETAINED FOR RE-USE PROVIDING POWER TO NEW SOUTH SIDE FORCEMAIN RTU PANEL.
5. DISCONNECT AND REMOVE EXISTING 120 VAC POWER CABLE FROM EXISTING WASHROOM 120/240 VAC POWER PANEL FEEDING DECOMMISSIONED NORTH SIDE FORCEMAIN LEAK MONITOR CONTROL PANEL.
6. EXISTING POWER CABLES FROM EXISTING WASHROOM 120/240 VAC POWER PANEL PRESENTLY FEEDING EXISTING SOUTH SIDE FORCEMAIN LEAK MONITOR REMOTE PANEL TO BE RETAINED FOR RE-USE PROVIDING POWER TO NEW SOUTH SIDE FORCEMAIN RTU PANEL.
7. DISCONNECT AND ABANDON EXISTING CONTROL CABLES PRESENTLY CONNECTED BETWEEN DECOMMISSIONED NORTH SIDE FORCEMAIN LEAK MONITOR CONTROL PANEL AND EXISTING SOUTH SIDE FORCEMAIN LEAK MONITOR REMOTE PANEL.

ENGINEERS GEOSCIENTISTS MANITOBA
Certificate of Authorization
Tetra Tech Canada Inc.
No. 6499

WARNING

IF POWER EQUIPMENT OR EXPLOSIVES ARE TO BE USED FOR EXCAVATION ON THIS PROJECT THE CONTRACTOR MUST:

1) NOTIFY THE GAS COMPANY OF THE PROPOSED LOCATION OF EXCAVATION.

2) TAKE PRECAUTION TO AVOID DAMAGE TO GAS COMPANY INSTALLATIONS.

SEE PROVINCIAL REGULATION 210/72 FOR DETAILS

B.M.
ELEV.

NO.	REVISIONS	DATE	BY
00	ISSUED FOR TENDER	20.12.22	DWD

TETRA TECH

DESIGNED BY	DWD	CHECKED BY	DWD
DRAWN BY	MG	APPROVED BY	BM
HOR. SCALE: VERTICAL:	1 : 250	ACCEPTED BY	DATE
DATE	20.11.20	ORIGINAL SIGNED B. JONES, P.ENG. SENIOR PROJECT ENGINEER	20.12.22

ORIGINAL DRAWING REVISION "00" SEALED BY D.W. DOWHAN 20.12.22

CONSULTANT DRAWING NO.
2000120800–DWG–E1002

Winnipeg
THE CITY OF WINNIPEG
WATER AND WASTE DEPARTMENT

BALTIMORE FORCE MAIN PIPE CROSSING THE ST. VITAL BRIDGE

CITY DRAWING NUMBER
1–0221S–E0002–001
SHEET 13 OF 20

ELECTRICAL
NORTH RIVER BANK – DETAILS

13

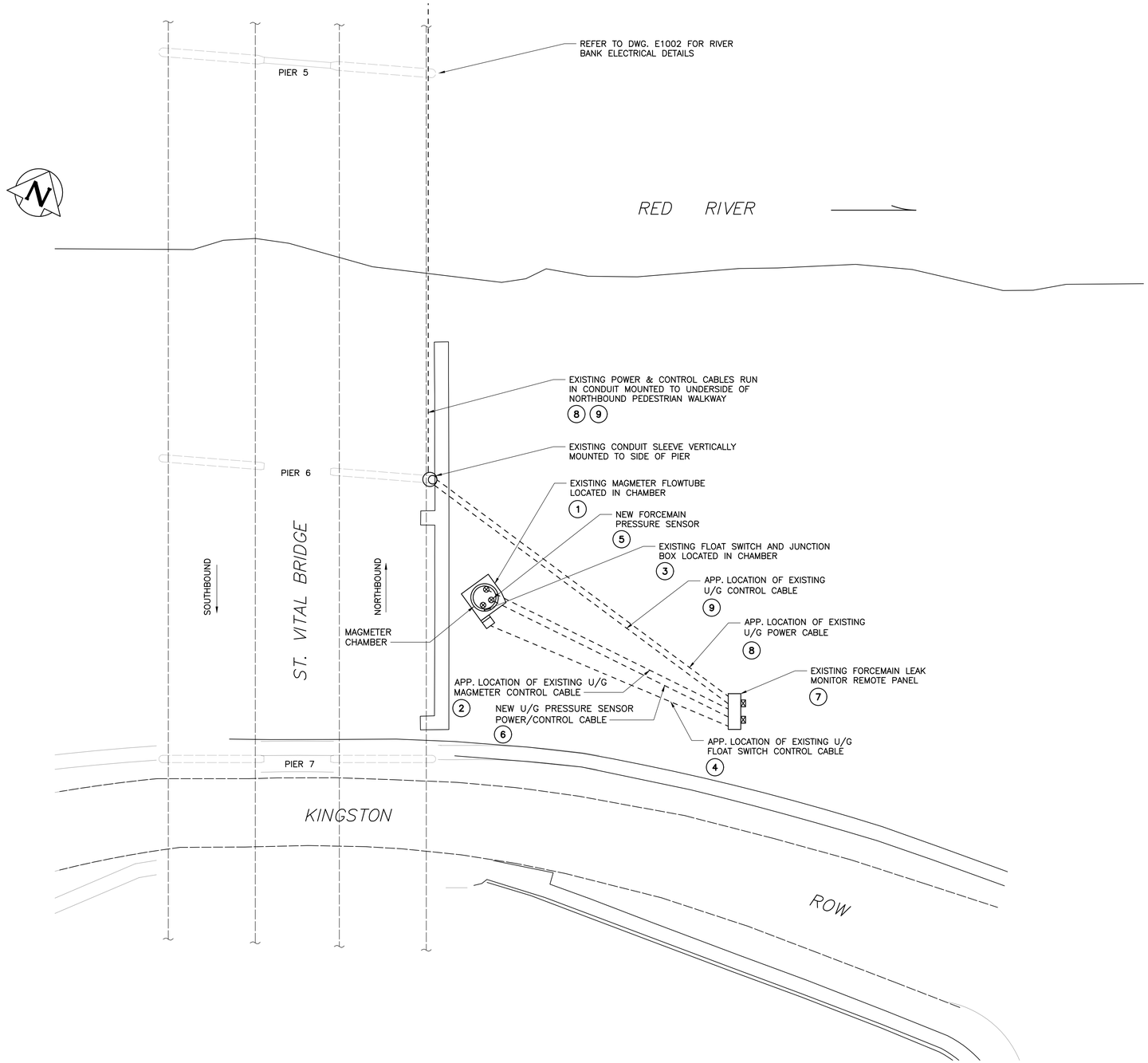

ELECTRICAL SCOPE OF WORK NOTES:

1. EXISTING SOUTH SIDE FORCEMAIN LEAK MONITORING MAGMETER FLOWTUBE LOCATED IN MANHOLE CHAMBER TO BE RETAINED.
2. EXISTING U/G CONTROL CABLES PRESENTLY CONNECTED BETWEEN MAGMETER FLOWTUBE IN MANHOLE CHAMBER AND MAGMETER TRANSMITTER MOUNTED IN EXISTING SOUTH SIDE FORCEMAIN LEAK MONITOR REMOTE PANEL TO BE RETAINED FOR RECONNECTION TO NEW SOUTH SIDE FORCEMAIN RTU PANEL.
3. EXISTING SOUTH SIDE MANHOLE CHAMBER FLOAT SWITCH AND JUNCTION BOX TO BE RETAINED.
4. EXISTING U/G CONTROL CABLES PRESENTLY CONNECTED BETWEEN MANHOLE CHAMBER FLOAT JUNCTION BOX AND SOUTH SIDE FORCEMAIN LEAK MONITOR REMOTE PANEL TO BE RETAINED FOR RECONNECTION TO NEW SOUTH SIDE FORCEMAIN RTU PANEL.
5. PROVIDE NEW FORCEMAIN PRESSURE SENSOR / TRANSMITTER FLANGE MOUNTED ON EXISTING FORCEMAIN IN MANHOLE CHAMBER.
6. PROVIDE NEW U/G PRESSURE SENSOR / TRANSMITTER POWER AND CONTROL CABLE TO BE CONNECTED TO NEW SOUTH SIDE FORCEMAIN RTU PANEL. REFER TO DRAWING E1005 FOR INSTRUMENT MOUNTING AND WIRING DETAILS.
7. DISCONNECT AND REMOVE EXISTING SOUTH SIDE FORCEMAIN LEAK MONITOR REMOTE PANEL TO BE REPLACED WITH NEW RTU PANEL. RETAIN EXISTING STEEL POSTS. REFER TO DRAWING E1005 FOR PANEL MOUNTING AND INSTALLATION DETAILS.
8. EXISTING POWER CABLES FROM EXISTING NORTH SIDE WASHROOM 120/240 VAC POWER PANEL PRESENTLY FEEDING EXISTING SOUTH SIDE FORCEMAIN LEAK MONITOR REMOTE PANEL TO BE RETAINED FOR RECONNECTION TO NEW SOUTH SIDE FORCEMAIN RTU PANEL.
9. DISCONNECT AND ABANDON EXISTING CONTROL CABLES PRESENTLY CONNECTED BETWEEN DECOMMISSIONED NORTH SIDE FORCEMAIN LEAK MONITOR CONTROL PANEL AND EXISTING SOUTH SIDE FORCEMAIN LEAK MONITOR REMOTE PANEL.

ENGINEERS GEOSCIENTISTS MANITOBA
Certificate of Authorization
Tetra Tech Canada Inc.
No. 6499

WARNING

IF POWER EQUIPMENT OR EXPLOSIVES ARE TO BE USED FOR EXCAVATION ON THIS PROJECT THE CONTRACTOR MUST:

1) NOTIFY THE GAS COMPANY OF THE PROPOSED LOCATION OF EXCAVATION.

2) TAKE PRECAUTION TO AVOID DAMAGE TO GAS COMPANY INSTALLATIONS.

SEE PROVINCIAL REGULATION 210/72 FOR DETAILS

B.M.
ELEV.

NO.	REVISIONS	DATE	BY
00	ISSUED FOR TENDER	20.12.22	DWD

TETRA TECH

DESIGNED BY	DWD	CHECKED BY	DWD
DRAWN BY	MG	APPROVED BY	BM
HOR. SCALE: VERTICAL:	1 : 250	ACCEPTED BY	DATE
DATE	20.11.27	ORIGINAL SIGNED B. JONES, P.ENG. SENIOR PROJECT ENGINEER	20.12.22

ORIGINAL DRAWING REVISION "00" SEALED BY D.W. DOWHAN 20.12.22

CONSULTANT DRAWING NO.
2000120800–DWG–E1003

Winnipeg
THE CITY OF WINNIPEG
WATER AND WASTE DEPARTMENT

BALTIMORE FORCE MAIN PIPE CROSSING THE ST. VITAL BRIDGE

CITY DRAWING NUMBER
1–0221S–E0003–001

SHEET 14 OF 20

ELECTRICAL
SOUTH RIVER BANK – DETAILS

14

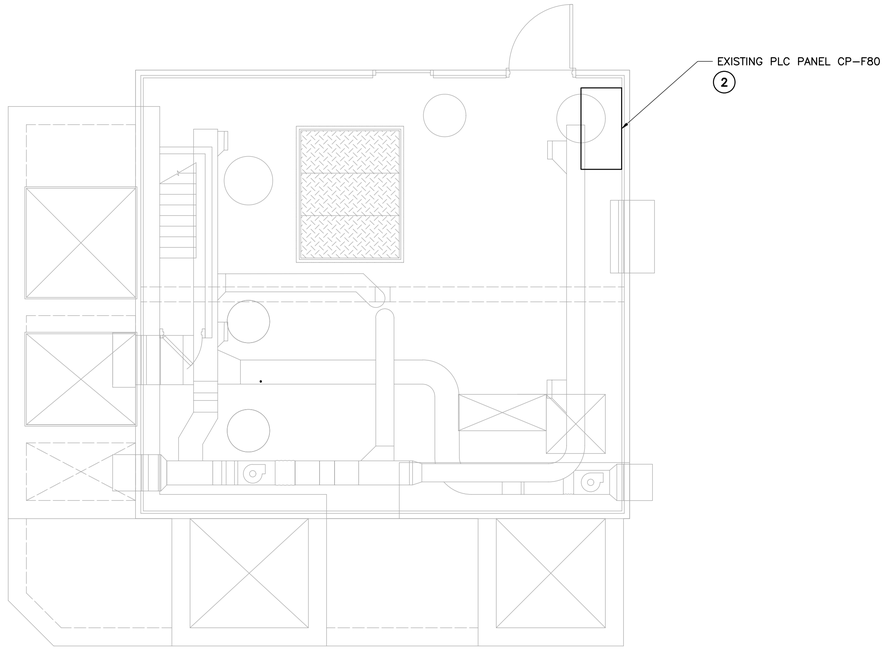

1 MAIN FLOOR PLAN
1 : 50

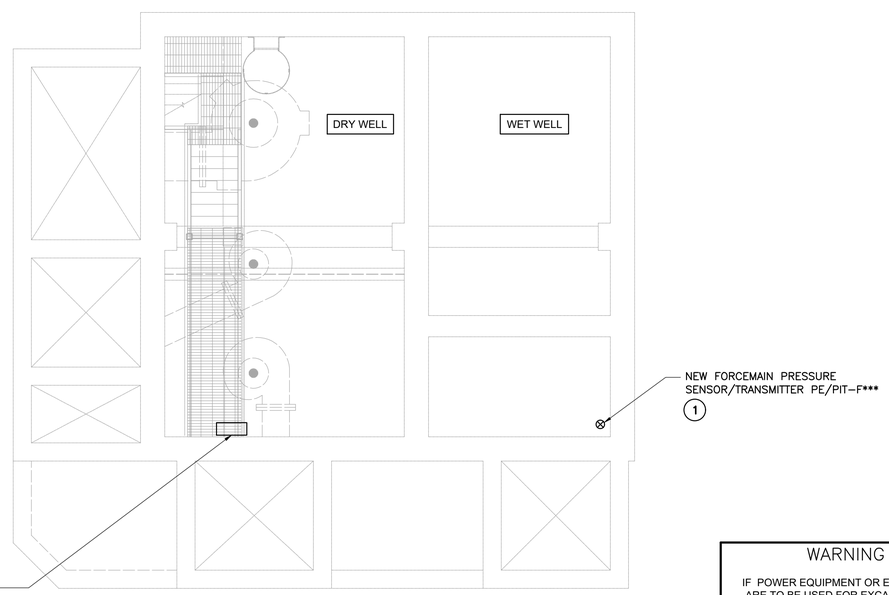

2 DRY/WET WELL PLAN
1 : 50

ELECTRICAL SCOPE OF WORK NOTES:

1. PROVIDE NEW FORCEMAIN PRESSURE SENSOR / TRANSMITTER FLANGE MOUNTED ON EXISTING FORCEMAIN C/W POWER AND CONTROL CABLES WIRED BACK TO EXISTING PLC PANEL CP-F80 ON MAIN FLOOR.
2. PROVIDE ALL LABOUR AND MATERIAL REQUIRED TO UPGRADE EXISTING PLC PANEL CP-F80 TO ACCOMMODATE NEW FORCEMAIN PRESSURE SENSOR / TRANSMITTER. SCOPE OF UPGRADE TO INCLUDE, BUT NOT BE LIMITED TO, PROVISION OF SENSOR TRANSMITTER FUSED POWER SUPPLY, INTERNAL WIRING OF ANALOG SIGNAL TO SPARE ANALOG INPUT, PLC LADDER LOGIC PROGRAMMING, HMI SCREEN GRAPHICS DEVELOPMENT SHOWING PRESSURE SENSOR ICON, REAL TIME VALUE DISPLAY AND TRENDING GRAPH, ETC.
3. PROVIDE ALL LABOUR AND MATERIAL REQUIRED TO UPGRADE EXISTING CITY OF WINNIPEG REMOTE TERMINAL UNIT (RTU) PANEL TO ACCOMMODATE NEW FORCEMAIN PRESSURE SENSOR ANALOG SIGNAL FROM UPGRADED PLC PANEL CP-F80.

ENGINEERS GEOSCIENTISTS MANITOBA
Certificate of Authorization
Tetra Tech Canada Inc.
No. 6499

WARNING

IF POWER EQUIPMENT OR EXPLOSIVES ARE TO BE USED FOR EXCAVATION ON THIS PROJECT THE CONTRACTOR MUST:

1) NOTIFY THE GAS COMPANY OF THE PROPOSED LOCATION OF EXCAVATION.

2) TAKE PRECAUTION TO AVOID DAMAGE TO GAS COMPANY INSTALLATIONS.

SEE PROVINCIAL REGULATION 210/72 FOR DETAILS

B.M.
ELEV.

NO.	REVISIONS	DATE	BY
00	ISSUED FOR TENDER	20.12.22	DWD

TETRA TECH

DESIGNED BY	DWD	CHECKED BY	DWD
DRAWN BY	MG	APPROVED BY	BM
HOR. SCALE: / VERTICAL:	1 : 50	ACCEPTED BY	DATE
		ORIGINAL SIGNED	20.12.22
DATE	20.11.27	B. JONES, P.ENG. SENIOR PROJECT ENGINEER	

ORIGINAL DRAWING REVISION "00" SEALED BY D.W. DOWHAN 20.12.22

CONSULTANT DRAWING NO.
2000120800–DWG–E1004

Winnipeg
THE CITY OF WINNIPEG
WATER AND WASTE DEPARTMENT

BALTIMORE FORCE MAIN PIPE CROSSING THE ST. VITAL BRIDGE

CITY DRAWING NUMBER
1–0221S–E0004–001
SHEET 15 OF 20

ELECTRICAL
EXISTING FLOOD PUMPING STATION DETAILS

15

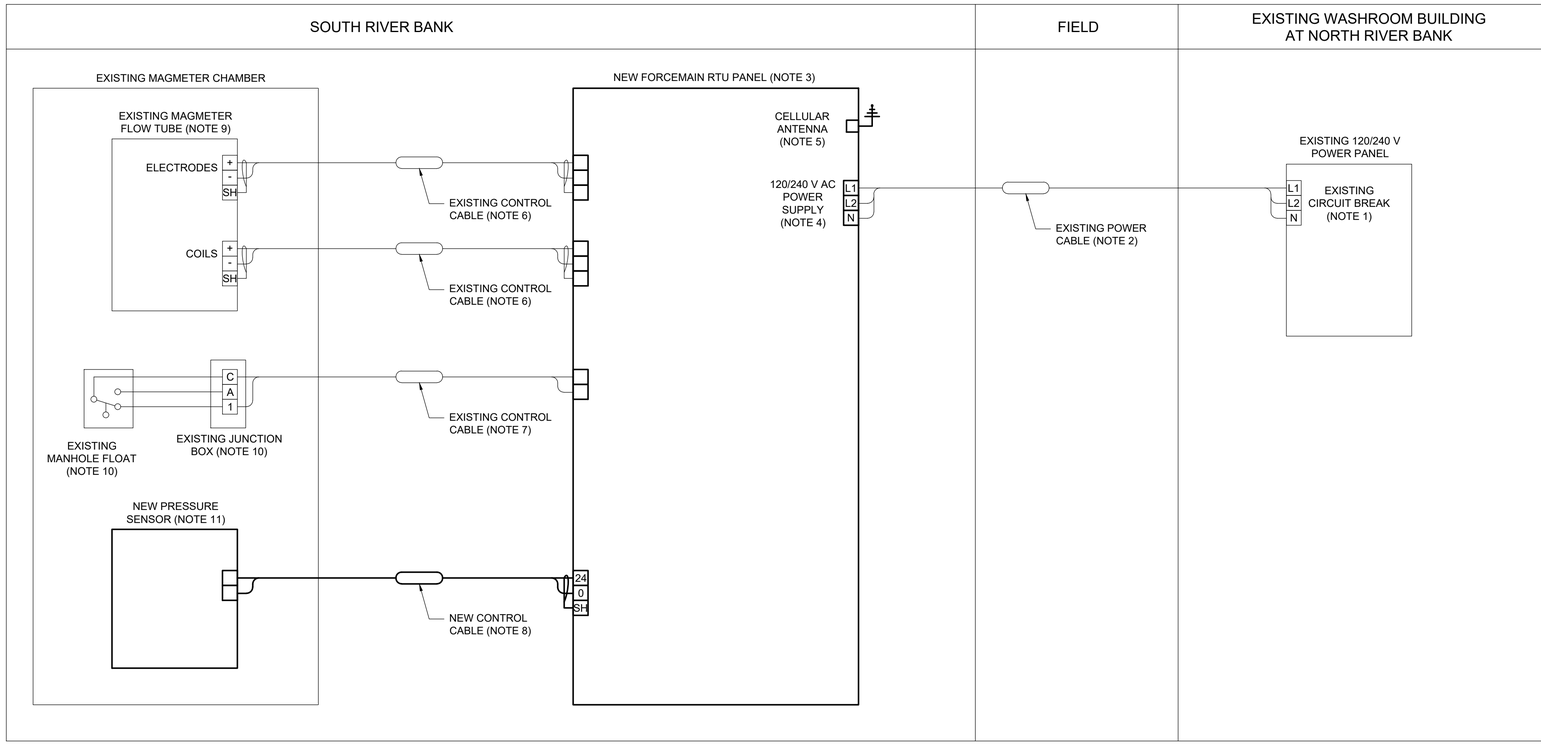

ELECTRICAL SCOPE OF WORK NOTES:

1. EXISTING 15A,1P CIRCUIT BREAKER PRESENTLY FEEDING DECOMMISSIONED SOUTH SIDE FORCEMAIN LEAK MONITOR REMOTE PANEL TO BE RETAINED FOR RE-USE PROVIDING POWER TO NEW SOUTH SIDE FORCEMAIN RTU PANEL.
2. EXISTING POWER CABLES FROM EXISTING WASHROOM 120/240 VAC POWER PANEL PRESENTLY FEEDING EXISTING SOUTH SIDE FORCEMAIN LEAK MONITOR REMOTE PANEL TO BE RETAINED FOR RE-USE PROVIDING POWER TO NEW SOUTH SIDE FORCEMAIN RTU PANEL.
3. DISCONNECT AND REMOVE EXISTING SOUTH SIDE FORCEMAIN LEAK MONITOR REMOTE PANEL TO BE REPLACED WITH NEW FORCEMAIN RTU PANEL. RETAIN EXISTING STEEL POSTS.
4. EXISTING POWER CABLES FROM EXISTING NORTH SIDE WASHROOM 120/240 VAC POWER PANEL PRESENTLY FEEDING EXISTING SOUTH SIDE FORCEMAIN LEAK MONITOR REMOTE PANEL TO BE RETAINED FOR RECONNECTION TO NEW SOUTH SIDE FORCEMAIN RTU PANEL.
5. COORDINATE WITH BELL MTS AND CITY OF WINNIPEG WATER & WASTE DEPARTMENT FOR PROVISION OF REMOTE CELLULAR CONNECTION BETWEEN NEW FORCEMAIN RTU PANEL AND SCADA SYSTEM LOCATED AT THE CITY OF WINNIPEG WASTEWATER SERVICES CONTROL CENTRE AT 360 MCPHILLIPS STREET.
6. EXISTING U/G CONTROL CABLES PRESENTLY CONNECTED BETWEEN MAGMETER FLOWTUBE IN MANHOLE CHAMBER AND MAGMETER TRANSMITTER MOUNTED IN EXISTING SOUTH SIDE FORCEMAIN LEAK MONITOR REMOTE PANEL TO BE RETAINED FOR RECONNECTION TO NEW SOUTH SIDE FORCEMAIN RTU PANEL.
7. EXISTING U/G CONTROL CABLES PRESENTLY CONNECTED BETWEEN MANHOLE FLOAT JUNCTION BOX AND SOUTH SIDE FORCEMAIN LEAK MONITOR REMOTE PANEL TO BE RETAINED FOR RECONNECTION TO NEW SOUTH SIDE FORCEMAIN RTU PANEL.
8. PROVIDE NEW U/G PRESSURE SENSOR / TRANSMITTER POWER AND CONTROL CABLE IN 38mm C TO BE CONNECTED TO NEW SOUTH SIDE FORCEMAIN RTU PANEL.
9. EXISTING SOUTH SIDE FORCEMAIN LEAK MONITORING MAGMETER FLOWTUBE LOCATED IN MANHOLE CHAMBER TO BE RETAINED FOR RECONNECTION TO NEW SOUTH SIDE FORCEMAIN RTU PANEL.
10. EXISTING SOUTH SIDE MANHOLE CHAMBER FLOAT SWITCH AND JUNCTION BOX TO BE RETAINED FOR RECONNECTION TO NEW SOUTH SIDE FORCEMAIN RTU PANEL.
11. PROVIDE NEW FORCEMIAN PRESSURE SENSOR / TRANSMITTER FLANGE MOUNTED ON EXISTING FORCEMAIN IN MANHOLE CHAMBER.

1 – – NEW SOUTH SIDE FORCEMAIN RTU PANEL FIELD WIRING DIAGRAM
N.T.S.

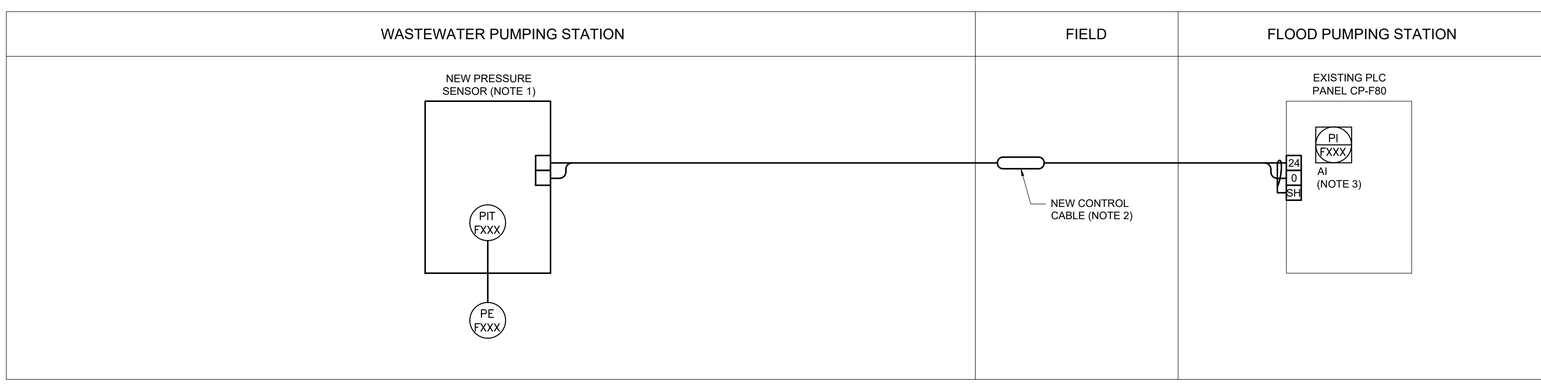

ELECTRICAL SCOPE OF WORK NOTES:

1. PROVIDE NEW FORCEMAIN PRESSURE SENSOR / TRANSMITTER FLANGE MOUNTED ON EXISTING FORCEMAIN IN DRY WELL.
2. PROVIDE NEW PRESSURE SENSOR / TRANSMITTER POWER AND CONTROL CABLE RUN IN 38mm PVC CONDUIT WIRED BACK TO EXISTING PLC PANEL CP-F80 ON MAIN FLOOR.
3. PROVIDE ALL LABOUR AND MATERIAL REQUIRED TO UPGRADE EXISTING PLC PANEL CP-F80 TO ACCOMMODATE NEW FORCEMAIN PRESSURE SENSOR / TRANSMITTER. SCOPE OF UPGRADE TO INCLUDE, BUT NOT BE LIMITED TO, PROVISION OF SENSOR TRANSMITTER FUSED POWER SUPPLY, INTERNAL WIRING OF ANALOG SIGNAL TO SPARE ANALOG INPUT, PLC LADDER LOGIC PROGRAMMING, HMI SCREEN GRAPHICS DEVELOPMENT SHOWING PRESSURE SENSOR ICON, REAL TIME VALUE DISPLAY AND TRENDING GRAPH, ETC.

2 – – BALTIMORE WASTEWATER PUMPING STATION NEW FORCEMAIN PRESSURE SENSOR FIELD WIRING DIAGRAM
N.T.S.

ENGINEERS GEOSCIENTISTS MANITOBA
Certificate of Authorization
Tetra Tech Canada Inc.
No. 6499

WARNING

IF POWER EQUIPMENT OR EXPLOSIVES ARE TO BE USED FOR EXCAVATION ON THIS PROJECT THE CONTRACTOR MUST:

1) NOTIFY THE GAS COMPANY OF THE PROPOSED LOCATION OF EXCAVATION.

2) TAKE PRECAUTION TO AVOID DAMAGE TO GAS COMPANY INSTALLATIONS.

SEE PROVINCIAL REGULATION 210/72 FOR DETAILS

B.M. ELEV.

NO.	REVISIONS	DATE	BY
00	ISSUED FOR TENDER	20.12.22	DWD

TETRA TECH

DESIGNED BY	DWD	CHECKED BY	DWD
DRAWN BY	MG	APPROVED BY	BM
HOR. SCALE:	N.T.S.	ACCEPTED BY	DATE
VERTICAL:		ORIGINAL SIGNED	20.12.22
DATE	20.12.17	B. JONES, P.ENG. SENIOR PROJECT ENGINEER	

ORIGINAL DRAWING REVISION "00" SEALED BY D.W. DOWHAN 20.12.22

CONSULTANT DRAWING NO.
2000120800–DWG–E1005

Winnipeg
THE CITY OF WINNIPEG
WATER AND WASTE DEPARTMENT

BALTIMORE FORCE MAIN PIPE CROSSING THE ST. VITAL BRIDGE

CITY DRAWING NUMBER 1–0221S–E0005–001

SHEET 16 OF 20

ELECTRICAL
RTU PANEL & WASTEWATER PUMPING STATION
MISC. INSTRUMENTATION WIRING DETAILS

16

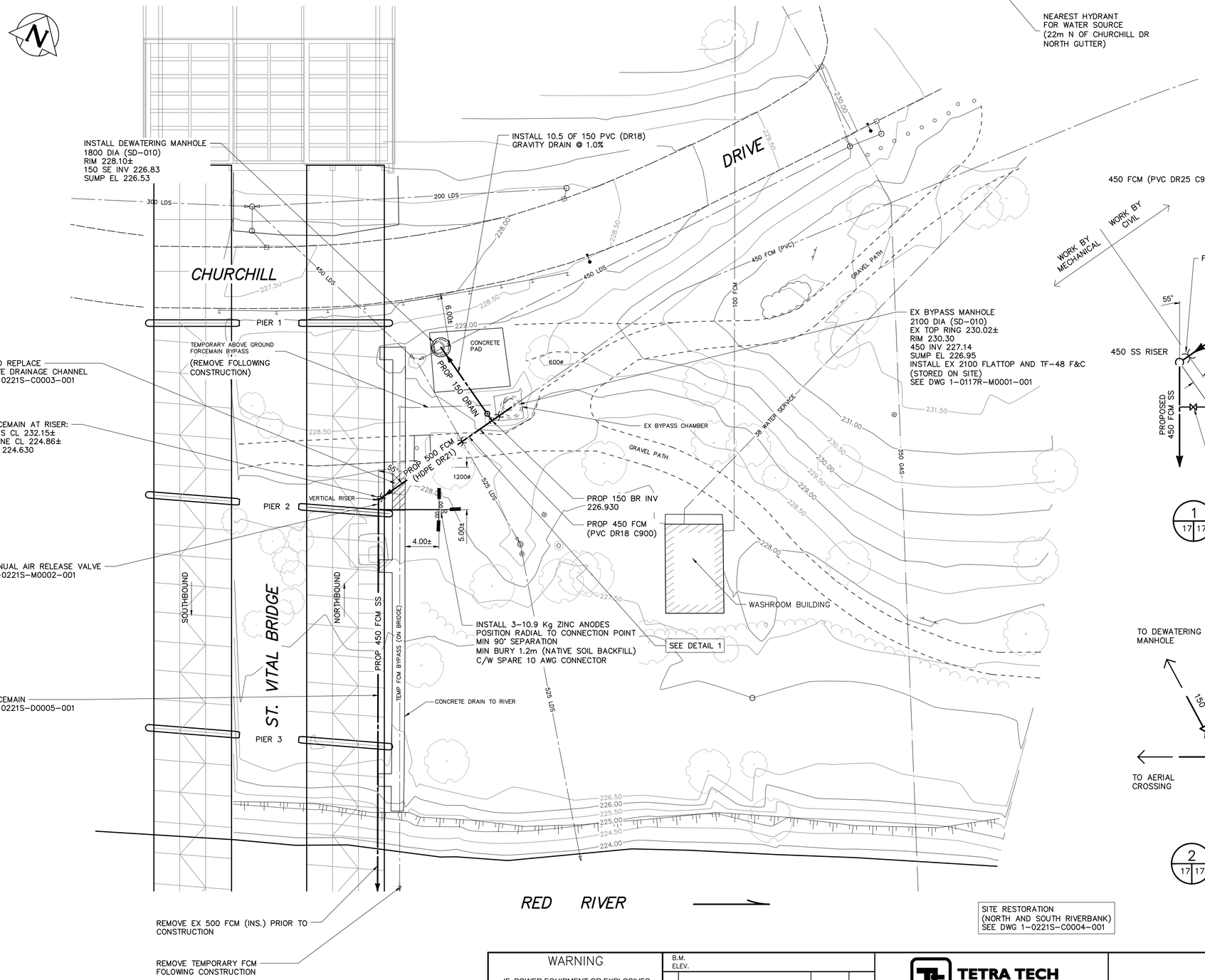

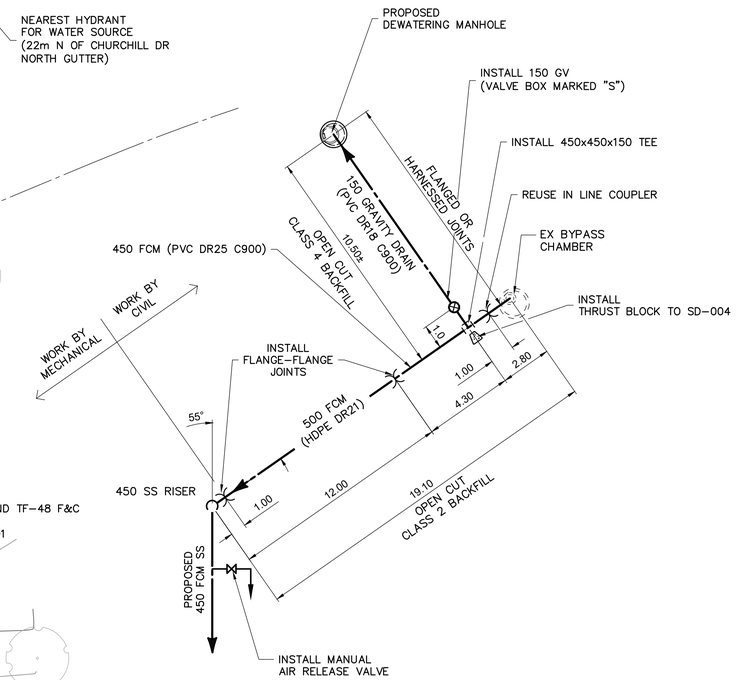

1 | 17 | 17 FORCEMAIN CONNECTIONS DETAIL

N.T.S.

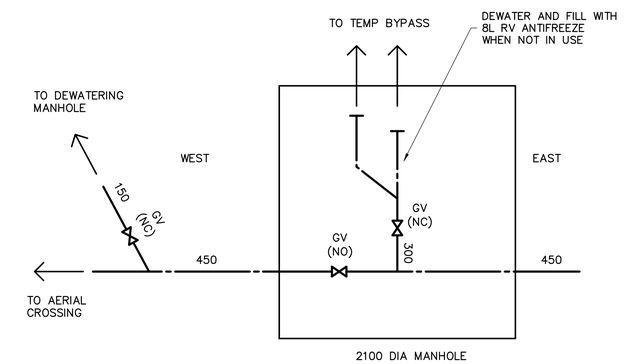

2 | 17 | 17 SCHEMATIC OF EXISTING BYPASS CHAMBER AND PROPOSED DRAIN

N.T.S.

0.0 5.0 10.0 15.0 20.0 25.0

ENGINEERS GEOSCIENTISTS MANITOBA
Certificate of Authorization
Tetra Tech Canada Inc.
No. 6499

WARNING

IF POWER EQUIPMENT OR EXPLOSIVES ARE TO BE USED FOR EXCAVATION ON THIS PROJECT THE CONTRACTOR MUST:

1) NOTIFY THE GAS COMPANY OF THE PROPOSED LOCATION OF EXCAVATION.

2) TAKE PRECAUTION TO AVOID DAMAGE TO GAS COMPANY INSTALLATIONS.

SEE PROVINCIAL REGULATION 210/72 FOR DETAILS

B.M.
ELEV.

NO.	REVISIONS	DATE	BY
00	ISSUED FOR TENDER	20.12.22	KJM

TETRA TECH

DESIGNED BY	KJM	CHECKED BY	IJM
DRAWN BY	GMD/NL	APPROVED BY	BLM
HOR. SCALE:	1 : 250	ACCEPTED BY	DATE
VERTICAL:		ORIGINAL SIGNED	20.12.22
DATE	2020.12.22	B. JONES, P.ENG. SENIOR PROJECT ENGINEER	

ORIGINAL DRAWING REVISION "00" SEALED BY K.J. McRAE 20.12.22

CONSULTANT DRAWING NO.
2000120800-DWG-C1010

Winnipeg

THE CITY OF WINNIPEG
WATER AND WASTE DEPARTMENT

BALTIMORE FORCE MAIN CROSSING
THE ST. VITAL BRIDGE

CIVIL
NORTH RIVER BANK CONNECTION

CITY DRAWING NUMBER
1-0221S-C0001-001

SHEET 17 OF 20

17

X:\A-G\CITY OF WINNIPEG - WATER & WASTE DEPARTMENT - 0012\734-20001208.00 - BALTIMORE FORCEMAIN D-D & CA\CAD\CIVIL\PRODUCTION DRAWINGS\TENDER DRG\ STAMP\2000120800-DWG-C1010_C1011_BALTIMORE FCM TIE-INS0ST.MP.DWG
2020-12-22 12:29 PM lyubchyan, Natalya

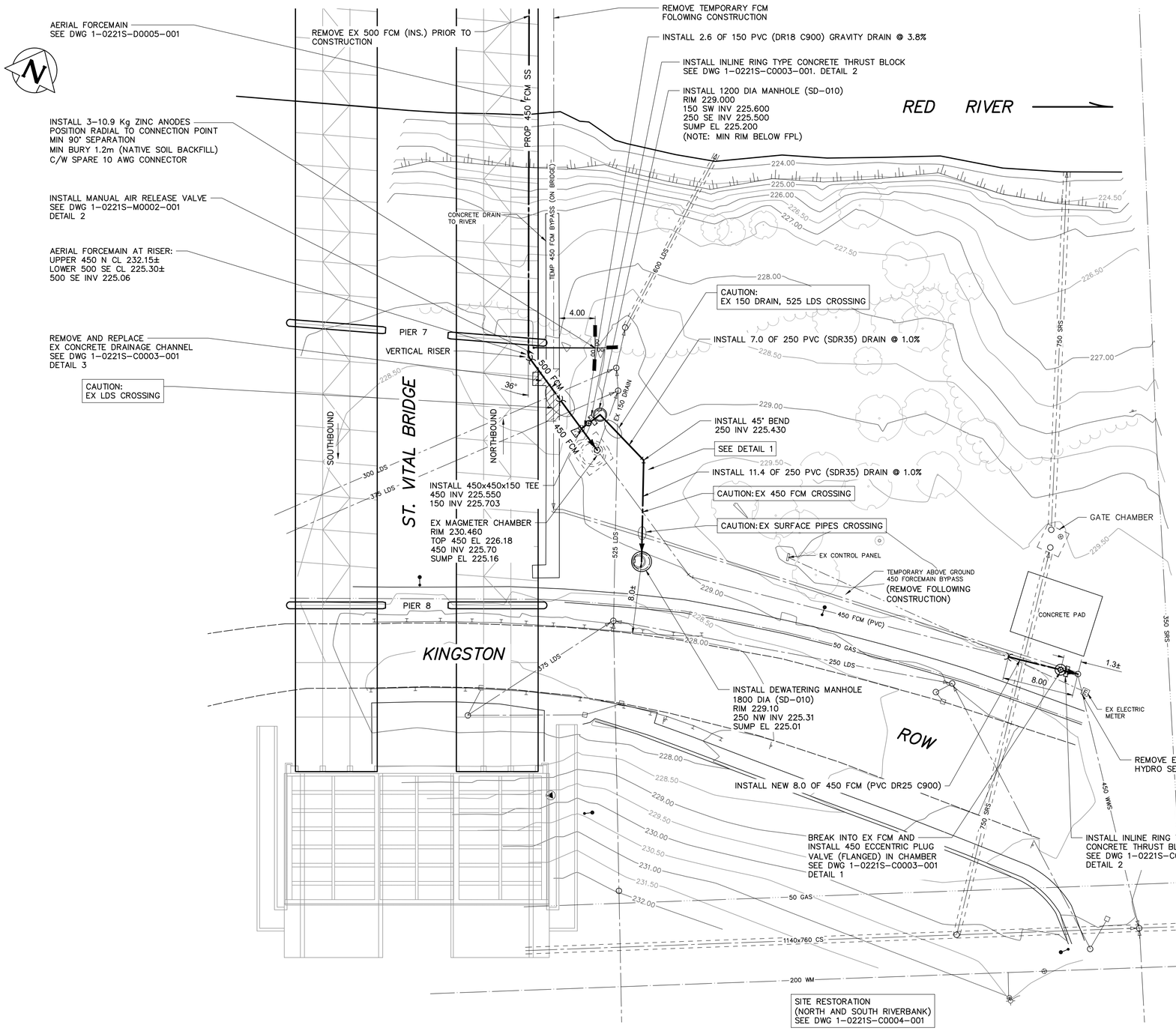

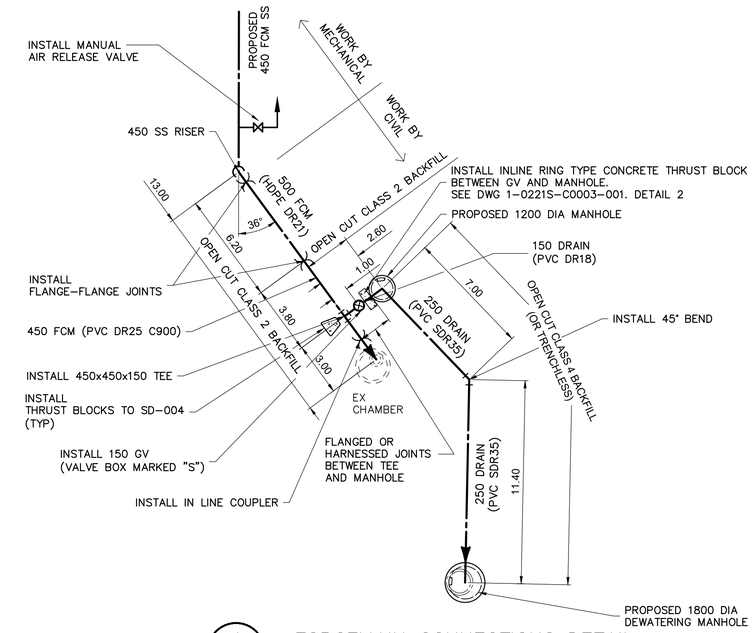

1 / 18 18 FORCEMAIN CONNECTIONS DETAIL

N.T.S.

0.0 5.0 10.0 15.0 20.0 25.0

ENGINEERS GEOSCIENTISTS MANITOBA
Certificate of Authorization
Tetra Tech Canada Inc.
No. 6499

WARNING

IF POWER EQUIPMENT OR EXPLOSIVES ARE TO BE USED FOR EXCAVATION ON THIS PROJECT THE CONTRACTOR MUST:

1) NOTIFY THE GAS COMPANY OF THE PROPOSED LOCATION OF EXCAVATION.

2) TAKE PRECAUTION TO AVOID DAMAGE TO GAS COMPANY INSTALLATIONS.

SEE PROVINCIAL REGULATION 210/72 FOR DETAILS

B.M.
ELEV.

NO.	REVISIONS	DATE	BY
00	ISSUED FOR TENDER	20.12.22	KJM

TETRA TECH

DESIGNED BY	KJM	CHECKED BY	IJM
DRAWN BY	GMD/NL	APPROVED BY	BLM
HOR. SCALE:	1 : 250	ACCEPTED BY	DATE
VERTICAL:		ORIGINAL SIGNED	20.12.22
DATE	2020.12.22	B. JONES, P.ENG. SENIOR PROJECT ENGINEER	

ORIGINAL DRAWING
REVISION "00" SEALED BY
K.J. McRAE
20.12.22

CONSULTANT DRAWING NO.
2000120800-DWG-C1011

Winnipeg

THE CITY OF WINNIPEG
WATER AND WASTE DEPARTMENT

THE ST. VITAL BRIDGE

CIVIL
SOUTH RIVER BANK CONNECTION

CITY DRAWING NUMBER
1-0221S-C0002-001

SHEET 18 OF 20

18

X:\A-G\CITY OF WINNIPEG - WATER & WASTE DEPARTMENT - 0012\734-20001208.00 - BALTIMORE FORCEMAIN D-D & CA\CAD\CIVIL\PRODUCTION DRAWINGS\TENDER ORIG STAMP\2000120800-DWG-C1011 BALTIMORE FCM TIE-INS(ISTAMP.DWG 2020-12-22 12:29 PM Lyubetsky, Nataliya

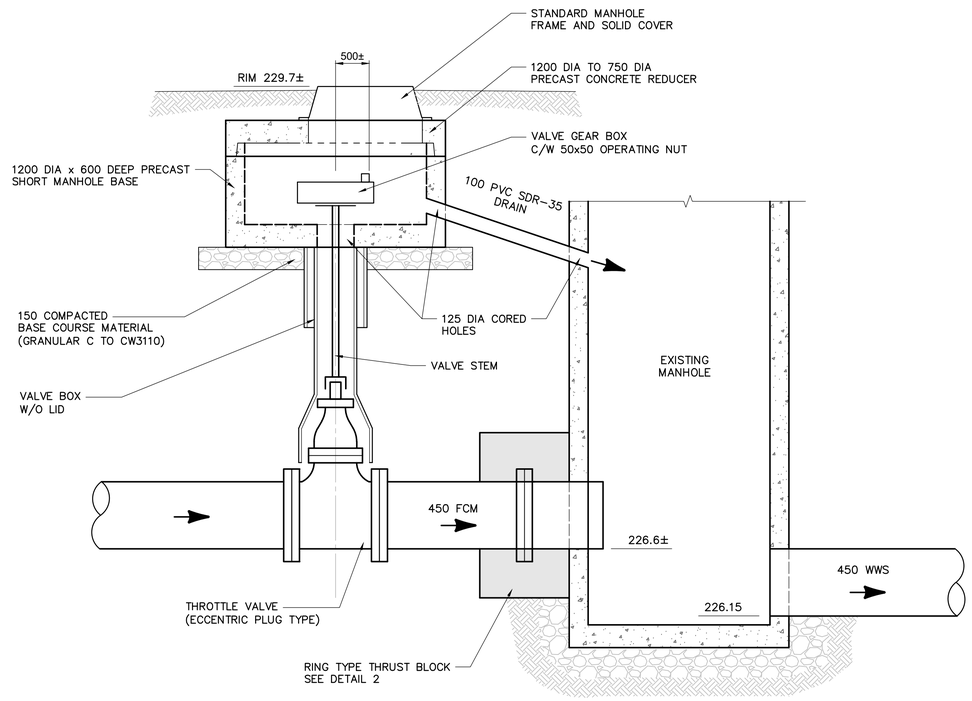

1 / 18 19 THROTTLE VALVE CHAMBER INSTALLATION SIMILAR TO SD-025
1:20

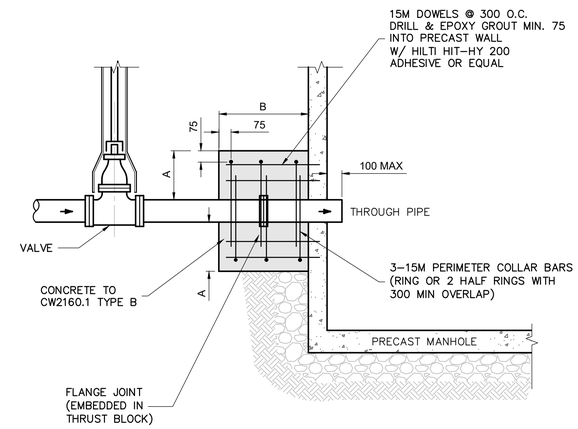

TYPICAL PIPE DIAM	DIMENSION A	DIMENSION B
150	600	300
450	1000	450

2 / 18 19 RING TYPE THRUST BLOCK AND MANHOLE CONNECTION
1:20

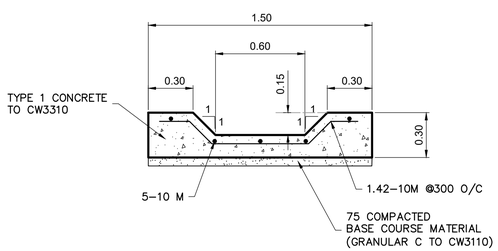

CONNECT TO EXISTING WITH 4-450 LONG 19.1mm DOWELS TO SD-213B (EACH CONNECTION)

3 / 18 19 CONCRETE DRAINAGE CHANNEL SECTION
1:20

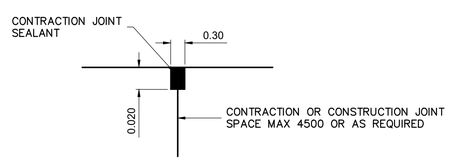

4 / 18 19 CONCRETE DRAINAGE CHANNEL JOINT SEALING DETAIL
N.T.S.

0.0 5.0 10.0 15.0 20.0 25.0

WARNING

IF POWER EQUIPMENT OR EXPLOSIVES ARE TO BE USED FOR EXCAVATION ON THIS PROJECT THE CONTRACTOR MUST:

1) NOTIFY THE GAS COMPANY OF THE PROPOSED LOCATION OF EXCAVATION.

2) TAKE PRECAUTION TO AVOID DAMAGE TO GAS COMPANY INSTALLATIONS.

SEE PROVINCIAL REGULATION 210/72 FOR DETAILS

ENGINEERS GEOSCIENTISTS MANITOBA
Certificate of Authorization
Tetra Tech Canada Inc.
No. 6499

B.M. ELEV.

NO.	REVISIONS	DATE	BY
00	ISSUED FOR TENDER	20.12.22	KJM

TETRA TECH

DESIGNED BY KJM | CHECKED BY IJM
DRAWN BY NL | APPROVED BY BLM
HOR. SCALE: AS NOTED | ACCEPTED BY | DATE
VERTICAL: | ORIGINAL SIGNED | 20.12.22
DATE 2020.12.22 | B. JONES, P.ENG. SENIOR PROJECT ENGINEER

ORIGINAL DRAWING REVISION "00" SEALED BY K.J. McRAE 20.12.22

CONSULTANT DRAWING NO. 2000120800-DWG-C1012

Winnipeg
THE CITY OF WINNIPEG
WATER AND WASTE DEPARTMENT

BALTIMORE FORCE MAIN PIPE CROSSING THE ST. VITAL BRIDGE

CITY DRAWING NUMBER 1-0221S-C0003-001
SHEET 19 OF 20

CIVIL DETAILS

19

X:\A-0\CITY OF WINNIPEG - WATER & WASTE DEPARTMENT - 0012\734-20001208.00 - BALTIMORE FORCEMAIN D-D & CA\CAD\CIVIL\PRODUCTION DRAWINGS\TENDER ORIG STAMP\2000120800-DWG-C1012 BALTIMORE FCM DETAILS0STAMP.DWG 2020-12-22 12:09 PM LJackson, Natalyps

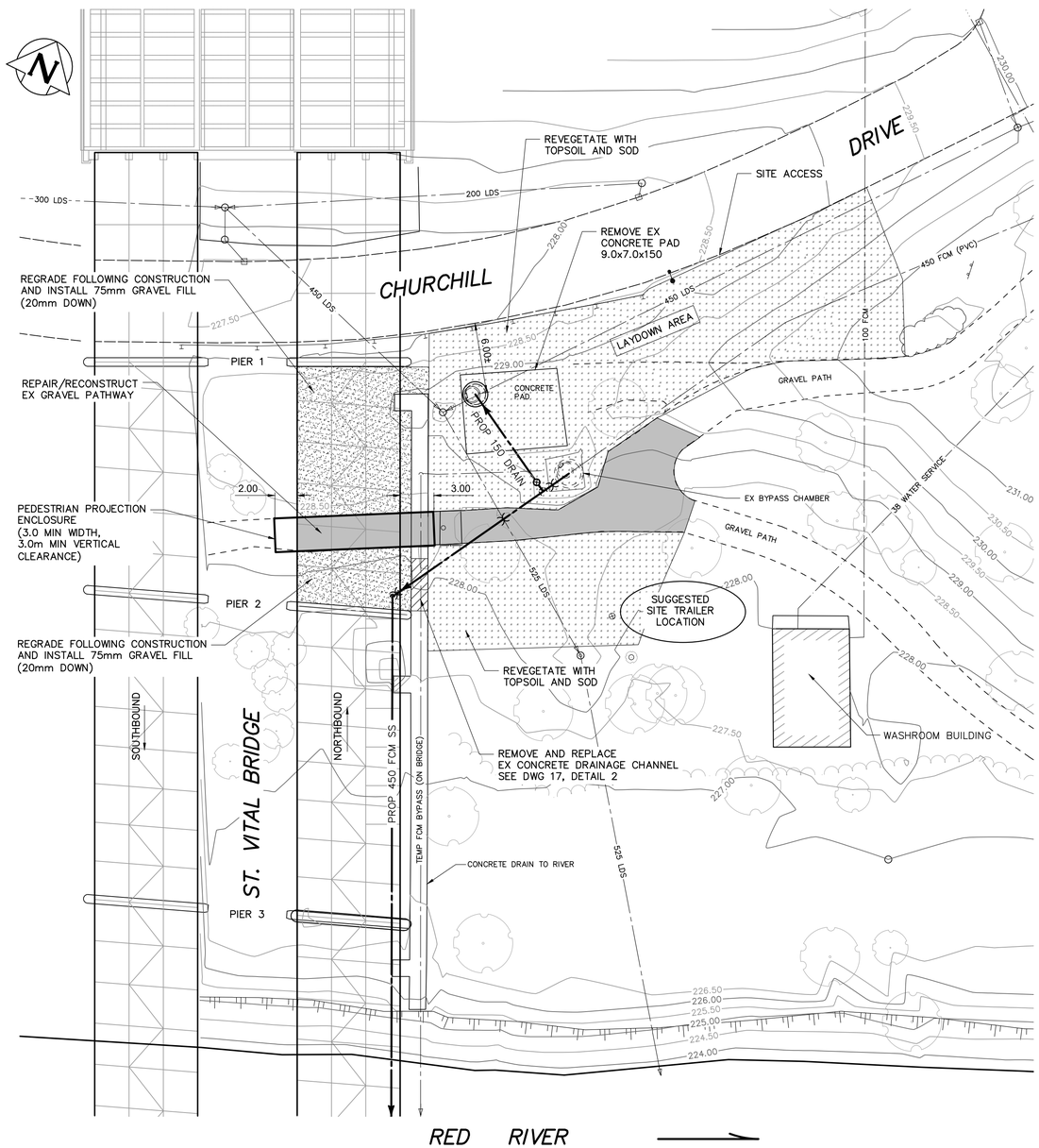

1 SITE RESTORATION NORTH RED RIVER BANK
SCALE 1 ; 250

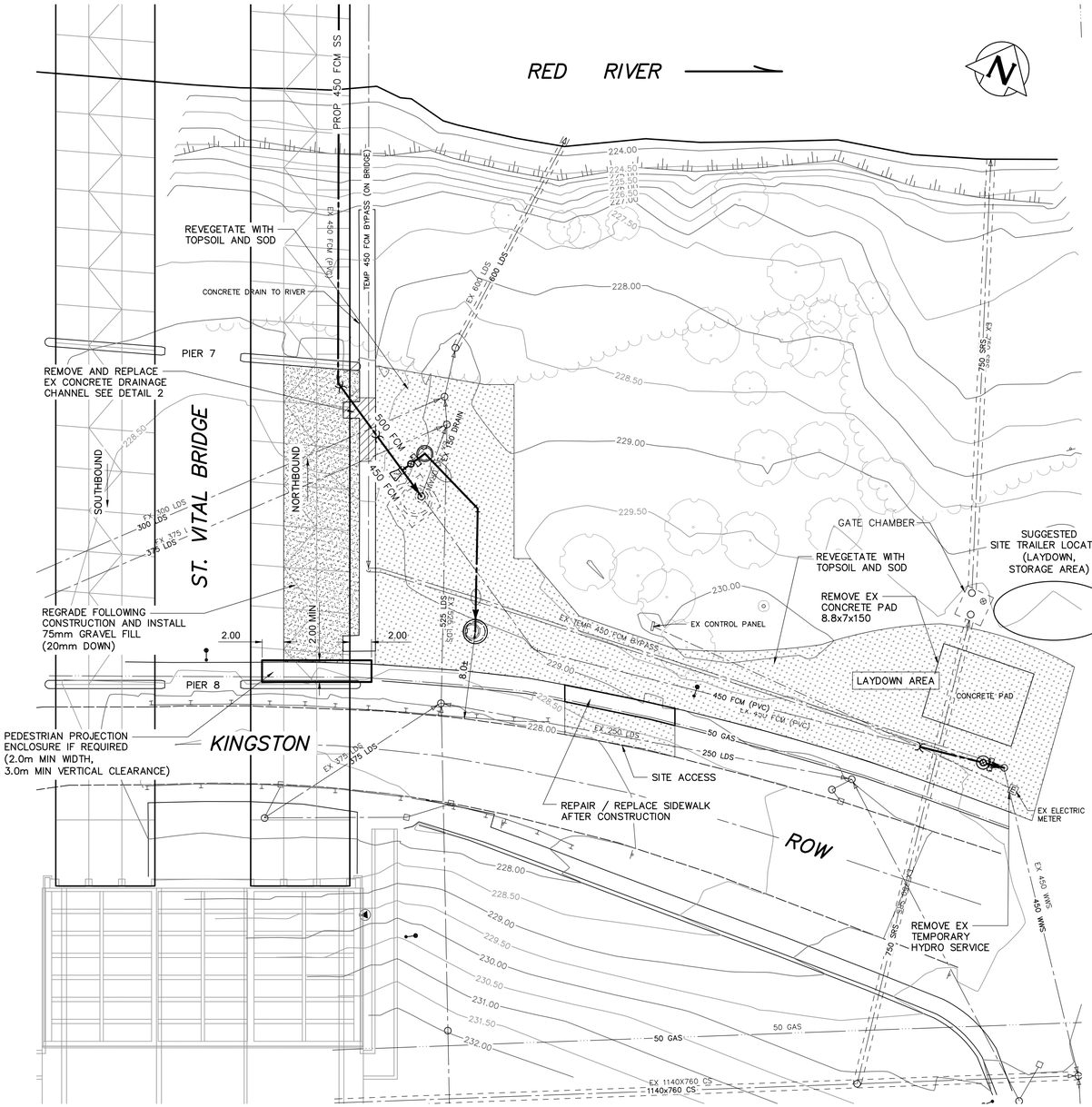

2 SITE RESTORATION SOUTH RED RIVER BANK
SCALE 1 ; 250

0.0 5.0 10.0 15.0 20.0 25.0

SEE DWG 1-0221S-C0001-001 FOR NORTH RIVERBANK WWS DESIGN
SEE DWG 1-0221S-C0002-001 FOR SOUTH RIVERBANK WWS DESIGN

REPLACEMENT SURFACING

- CONCRETE DRAINAGE CHANNEL
- TOPSOIL AND SOD
- TOPSOIL AND GRASS SEED
- GRAVEL PATHWAY

ENGINEERS GEOSCIENTISTS MANITOBA
Certificate of Authorization
Tetra Tech Canada Inc.
No. 6499

WARNING

IF POWER EQUIPMENT OR EXPLOSIVES ARE TO BE USED FOR EXCAVATION ON THIS PROJECT THE CONTRACTOR MUST:

1) NOTIFY THE GAS COMPANY OF THE PROPOSED LOCATION OF EXCAVATION.

2) TAKE PRECAUTION TO AVOID DAMAGE TO GAS COMPANY INSTALLATIONS.

SEE PROVINCIAL REGULATION 210/72 FOR DETAILS

B.M. ELEV.

NO.	REVISIONS	DATE	BY
00	ISSUED FOR TENDER	20.12.22	KJM

TETRA TECH

DESIGNED BY	KJM	CHECKED BY	IJM
DRAWN BY	NL	APPROVED BY	BLM
HOR. SCALE:	1 : 250	ACCEPTED BY	DATE
VERTICAL:		ORIGINAL SIGNED	20.12.22
DATE	2020.12.22	B. JONES, P.ENG. SENIOR PROJECT ENGINEER	

ORIGINAL DRAWING REVISION "00" SEALED BY K.J. McRAE 20.12.22

CONSULTANT DRAWING NO. 2000120800-DWG-C1013

Winnipeg

THE CITY OF WINNIPEG
WATER AND WASTE DEPARTMENT

BALTIMORE FORCE MAIN CROSSING
THE ST. VITAL BRIDGE

CIVIL
SITE RESTORATION

CITY DRAWING NUMBER 1-0221S-C0004-001

SHEET 20 OF 20

20

X:\A-C\CITY OF WINNIPEG - WATER & WASTE DEPARTMENT - 0012\734-20001208.00 - BALTIMORE FORCEMAIN D-D & CA\CAD\CIVIL\PRODUCTION DRAWINGS\TENDER ORIG STAMP\2000120800-DWG-C1013 BALTIMORE RESTORATIONSTAMP.DWG
2020-12-22 02:17 PM Lyubetsky, Nataliya

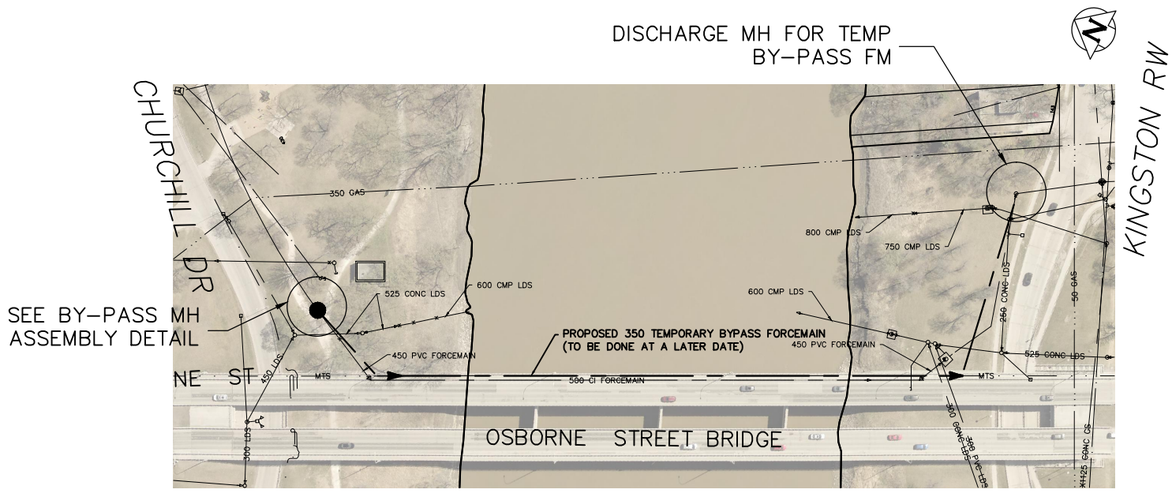

PLAN VIEW

SCALE 1:2000

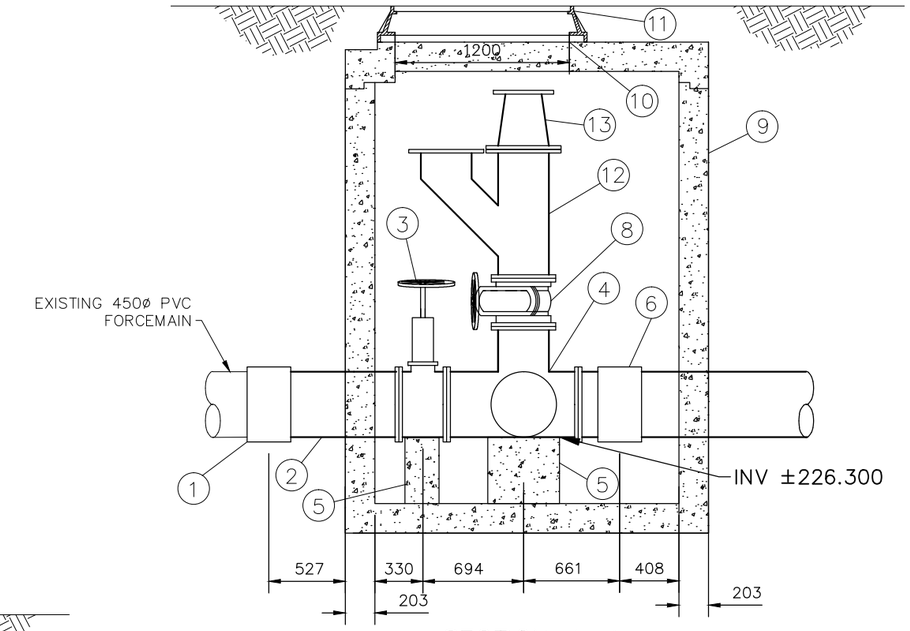

SECTION A–A

SCALE 1:40

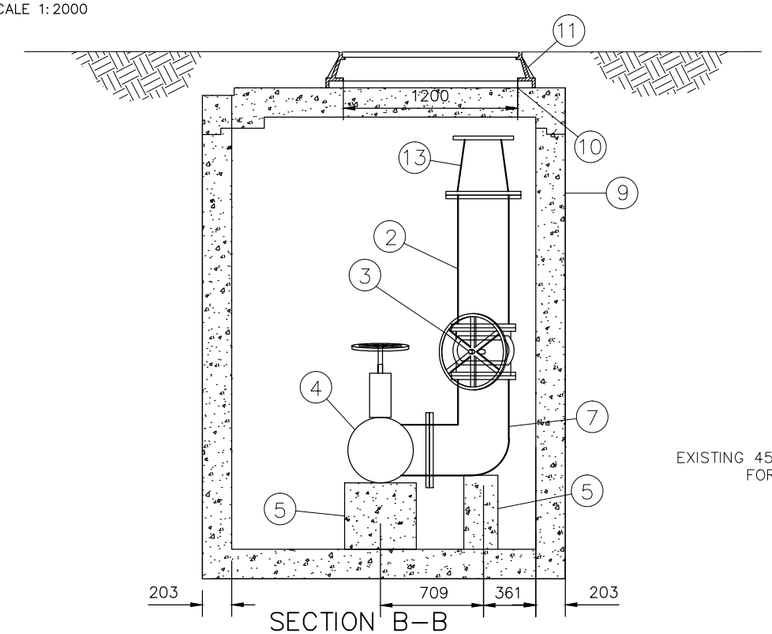

SECTION B–B

SCALE 1:40

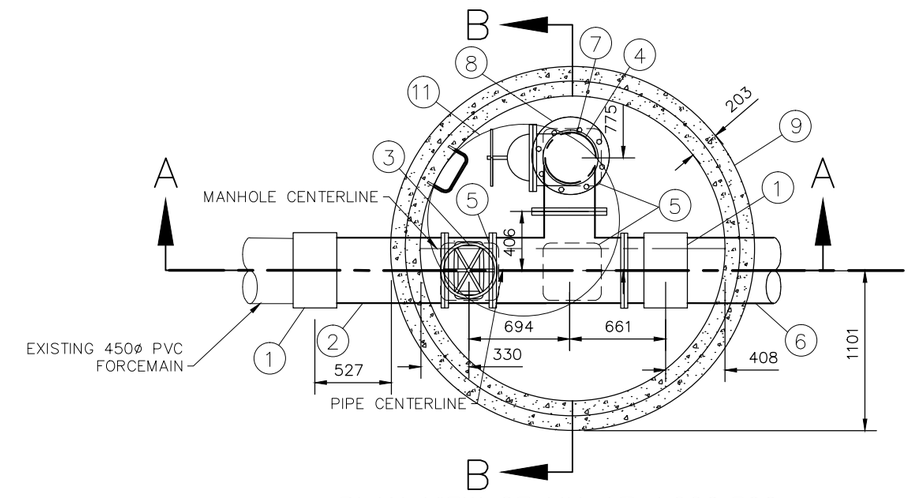

PLAN VIEW OF MH AT ±226.300

SCALE 1:40

MATERIALS LIST

ITEM	DESCRIPTION	ENDS	LENGTH	QUANTITY
1	450 COUPLING	–	–	2
2	450ø D.I. SPOOL	FL X PE	0.9	1
3	450ø GATE VALVE – RISING STEM	FL X FL	–	1
4	450X450X350 C.I. TEE	–	–	1
5	CONCRETE SUPPORT	–	–	1
6	450ø D.I. SPOOL	FL X PE	0.3	1
7	90–450ø BEND	–	–	1
8	350 GATE VALVE (W/ BLIND FLANGE)	FL X FL	–	1
9	2100 CONCRETE MANHOLE	–	–	1
10	2100X1200 REDUCER	–	–	1
11	TITAN TF48 1200 MANHOLE F&C	–	–	1
12	350 WYE	–	–	1
13	350–250 REDUCER	–	–	1

LOCATION APPROVED
UNDERGROUND STRUCTURES

SUPV. U/G STRUCTURES COMMITTEE — DATE

NOTE:

LOCATION OF UNDERGROUND STRUCTURES AS SHOWN ARE BASED ON THE BEST INFORMATION AVAILABLE BUT NO GUARANTEE IS GIVEN THAT ALL EXISTING UTILITIES ARE SHOWN OR THAT THE GIVEN LOCATIONS ARE EXACT. CONFIRMATION OF EXISTENCE AND EXACT LOCATION OF ALL SERVICES MUST BE OBTAINED FROM THE INDIVIDUAL UTILITIES BEFORE PROCEEDING WITH CONSTRUCTION.

B.M.
ELEV.

NO.	REVISIONS	DATE	BY

DESIGNED BY	DEB	CHECKED BY	SC
DRAWN BY	RS	APPROVED BY	KZ
SCALE: HORIZONTAL	AS SHOWN	RELEASED FOR CONSTRUCTION	
VERTICAL	AS SHOWN		
DATE	2019 01 14	DATE	

PLOT DATE: 2019 01 14

ENGINEER'S SEAL

PROVINCE OF MANITOBA
K.R. ZUREK
Member 7466
REGISTERED PROFESSIONAL ENGINEER

CONSULTANT DRAWING NUMBER
–

Winnipeg

THE CITY OF WINNIPEG

WATER AND WASTE DEPARTMENT
ENGINEERING DIVISION

2018 BYPASS PUMPING ASSEMBLY
AND MANHOLE INSTALLATION

BALTIMORE FORCE MAIN

KINGSTON ROW TO
CHURCHILL DRIVE

SHEET 1 OF 1

CITY DRAWING NUMBER
1–0117L–M0001–001

FILE PATH: R:\DRAWINGS\SEWER\2018 RENEWALS\ST VITAL FORCEMAIN\CONSTRUCTION DWG\
FILE NAME: ST VITAL FORCEMAIN.dwg