B SIZE – 279mm x 432mm
LAST SAVE: 2023/07/20 – 3:23pm
PATH: C:\pw working directory\projects 2022\dillon_40zhl\dms07227\223229-04-LOOP-CON.dwg

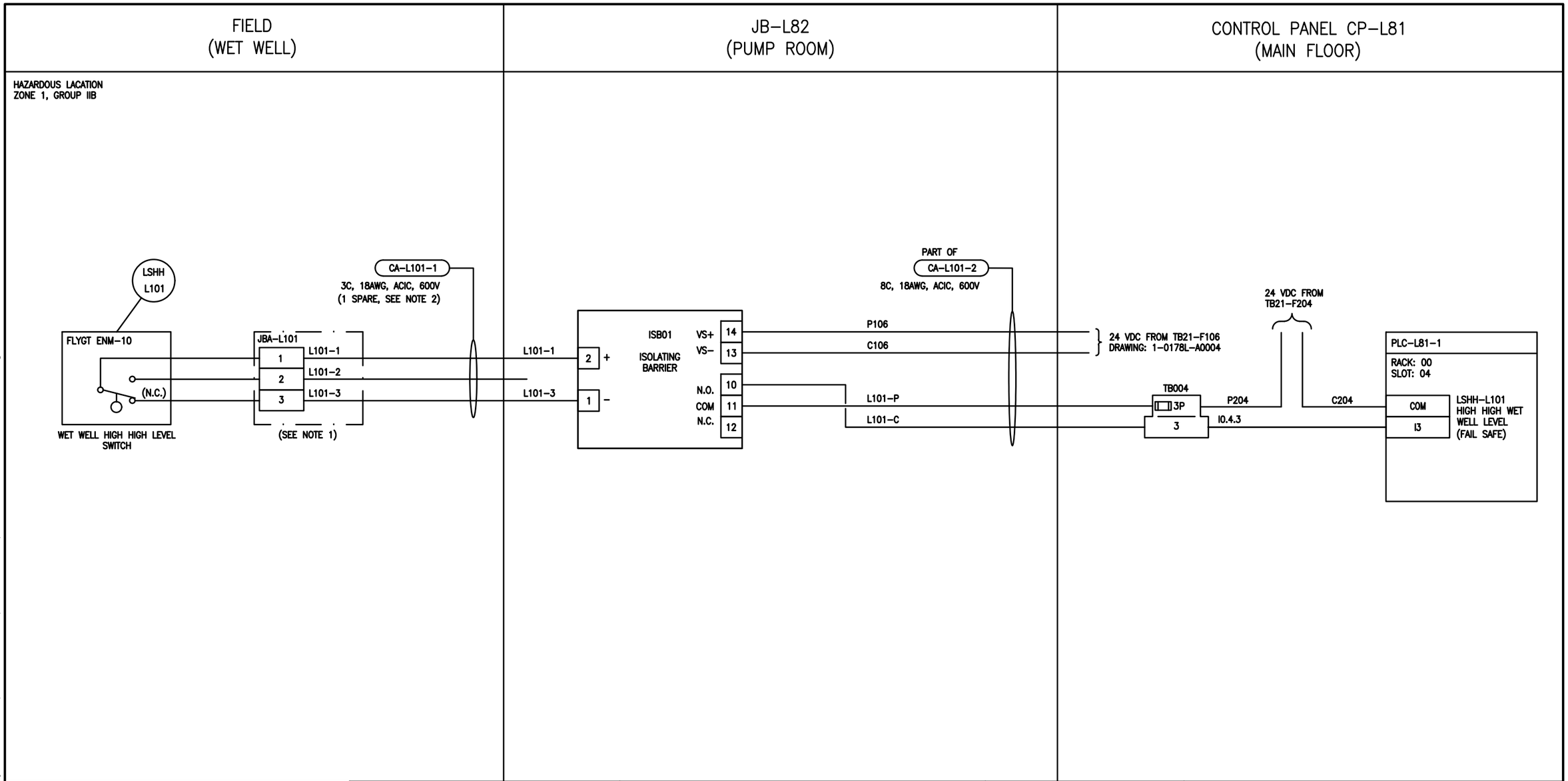

GENERAL NOTES:

1. PROVIDE AND INSTALL NEW NEMA TYPE 4X JUNCTION BOX WITH TERMINALS AND IDENTIFICATION LAMACOID. JUNCTION BOX SIZE SHALL BE 6" HEIGHT x 6" WIDTH x 4" DEPTH COMPLETE WITH BACK PANEL AND GROUND BAR.
2. UTILIZE RIGID CONDUIT BETWEEN JBA–L82 AND JBA–L101 COMPLETE WITH HAZARDOUS RATED CONDUIT SEAL. CONNECT ALL WIRES AT JBA–L101 AND LEAVE ONE SPARE CONDUCTOR COILED UP JBA–L82.

NOT FOR CONSTRUCTION

NO.	REVISIONS	DATE	DESIGN	CHECK
0	ISSUED FOR TENDER	2023/07/20	CAL	BLM

DILLON CONSULTING
Dillon Consulting Limited
1558 Willson Place
Winnipeg, MB, Canada R3T 0Y4
204–453–2301

DESIGNED BY: CAL	CHECKED BY: BLM
DRAWN BY: SK	APPROVED BY: BLM
SCALE: NTS	DATE: MARCH 2023
ISSUED FOR CONSTRUCTION BY:	DATE:
CONSULTANT NO.: 22–3229	

ENGINEER'S SEAL

PROVINCE OF MANITOBA
C.A. LANGE
Member
37791
2023/07/20
REGISTERED PROFESSIONAL ENGINEER

Winnipeg
THE CITY OF WINNIPEG
WATER AND WASTE DEPARTMENT

RIVERBEND LIFT PUMPING STATION
2023 UPGRADES
LOOP DIAGRAM
WET WELL HIGH–HIGH LEVEL SWITCH
LSHH–L101

CITY DRAWING NUMBER	SHEET	REV.	SIZE
1–0178L–A0022	001	0	B