A1 SIZE - 594mm x 841mm

ELEMENTARY DIAGRAM:

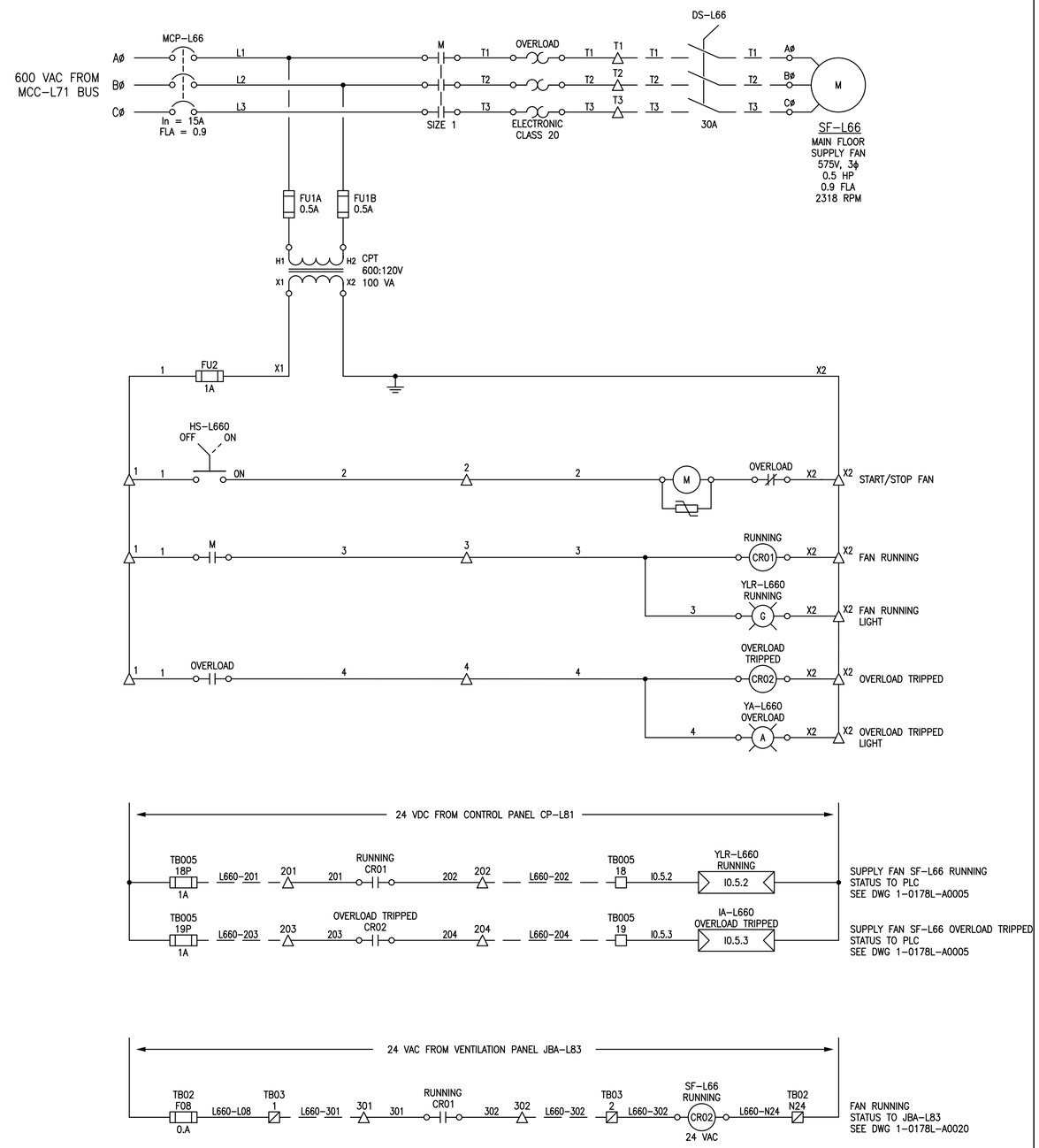

FIELD CONNECTION DIAGRAM:

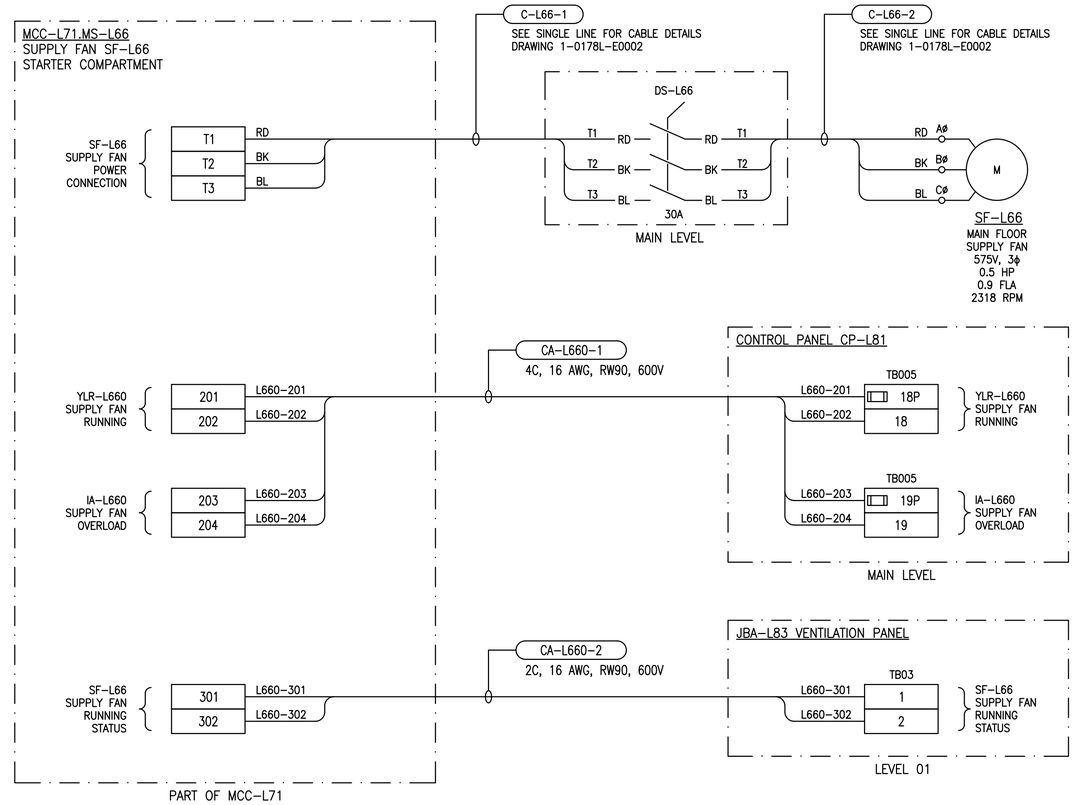

LEGEND:

- INTERNAL WIRING
- FIELD (EXTERNAL) WIRING
- MOTOR STARTER ENCLOSURE TERMINAL
- VENTILATION PANEL JBA-L83 TERMINAL
- CONTROL PANEL CP-L81 TERMINAL
- SURGE PROTECTION DEVICE
- INDICATING LIGHT (G=GREEN, A=AMBER)
- PLC INPUT

DRAWING NUMBER	REFERENCE DRAWINGS
1-0178L-E0002	ELECTRICAL SINGLE LINE DIAGRAM

NOT FOR CONSTRUCTION

ISSUED FOR TENDER

ENGINEERS GEOSCIENTISTS MANITOBA
Certificate of Authorization
Dillon Consulting Limited (MB)
No. 1789 Date:

NO.	REVISIONS	DATE	DESIGN	CHECK
0	ISSUED FOR TENDER	2023/07/20	CAL	BLM

DILLON CONSULTING

DESIGNED BY: CAL	CHECKED BY: BLM
DRAWN BY: SK	APPROVED BY: BLM
SCALE: NTS	RELEASED FOR CONSTRUCTION BY:
DATE: MARCH 2023	DATE:
CONSULTANT NO.: 22-3229	

ENGINEER'S SEAL
PROVINCE OF MANITOBA
C.A. LANGE
Member
37791
2023/07/20
REGISTERED PROFESSIONAL ENGINEER

Winnipeg
THE CITY OF WINNIPEG
WATER AND WASTE DEPARTMENT

RIVERBEND LIFT PUMPING STATION
2023 UPGRADES
MOTOR STARTER SCHEMATIC AND CONNECTION DIAGRAM
MAIN LEVEL SUPPLY FAN
SF-L66

CITY DRAWING NUMBER	SHEET	REV.	SIZE
1-0178L-E0012	001	0	A1

223229-04-MSS-SF-L66.dwg

LAST SAVE: 2023/07/20 - 3:21pm
PATH: C:\pw working directory\projects 2022\dillon_40zh\dms0727\223229-04-MSS-SF-L66.dwg