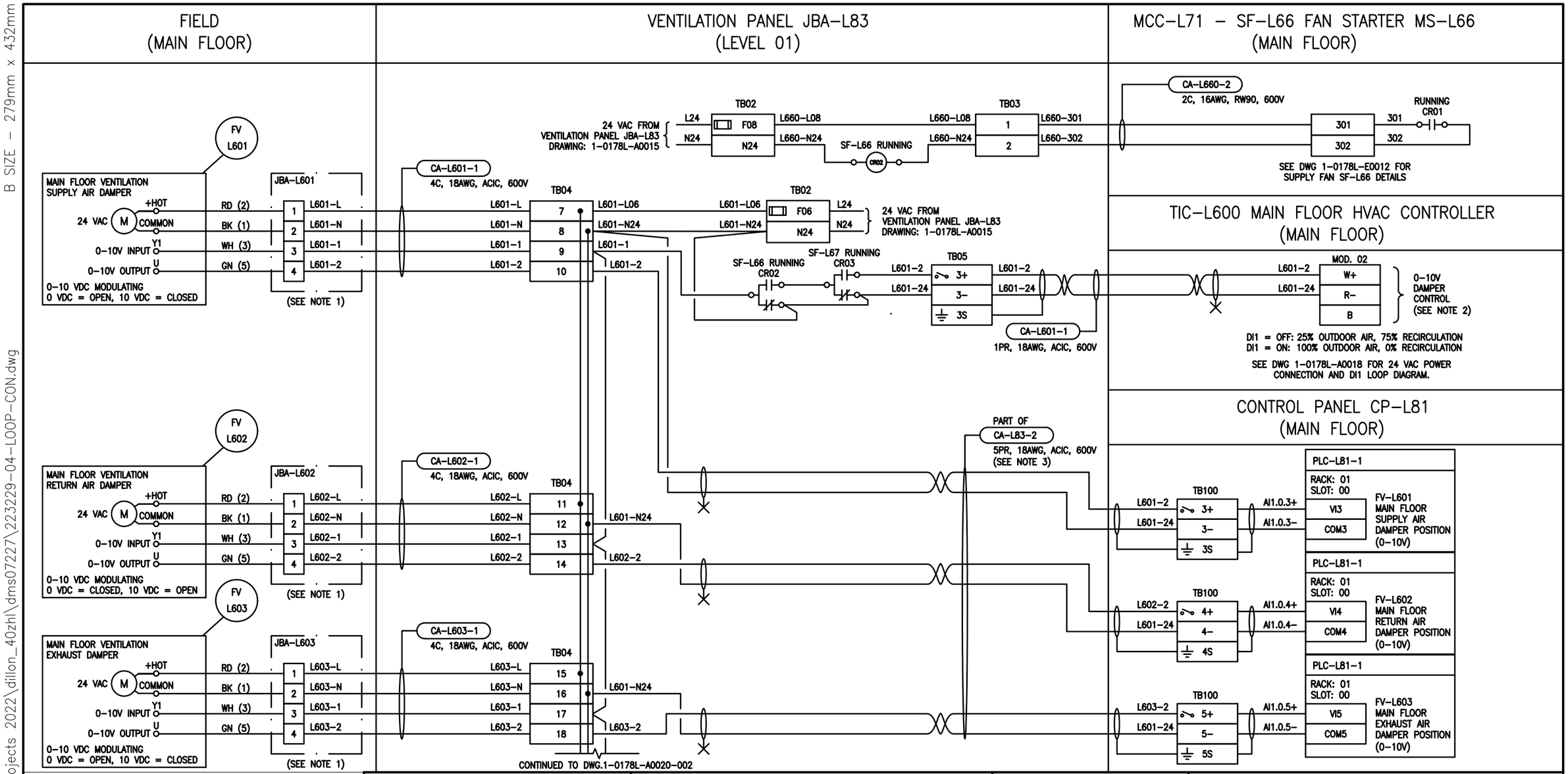

GENERAL NOTES:

1. SUPPLY AND INSTALL NEW NEMA TYPE 4 JUNCTION BOX, COMPLETE WITH TERMINAL, GROUND BAR, AND IDENTIFICATION LAMACOID. JUNCTION BOX SIZE SHALL BE 6"H x 6"W x 4"D COMPLETE WITH BACK PANEL.
2. VENTILATION OF THE STATION IS BASED ON THE STATION OCCUPANCY (HS–L600) LIGHT SWITCH SHOWN ON DRAWING 1–0178L–A0018. WHEN THE INPUT IS ACTIVATED, THERE WILL BE 100% FRESH AIR. WHEN THE INPUT IS DEACTIVATED, THERE WILL BE 25% FRESH AIR AND 75% RECIRCULATION AIR.
3. NOT ALL PAIRS ARE SHOWN ON THIS DRAWING.

NOT FOR CONSTRUCTION

NO.	REVISIONS	DATE	DESIGN	CHECK
0	ISSUED FOR TENDER	2023/07/20	CAL	BLM

DILLON CONSULTING
Dillon Consulting Limited
1558 Willson Place
Winnipeg, MB, Canada R3T 0Y4
204–453–2301

DESIGNED BY: CAL	CHECKED BY: BLM
DRAWN BY: SK	APPROVED BY: BLM
SCALE: NTS	DATE: MARCH 2023
ISSUED FOR CONSTRUCTION BY:	DATE:
CONSULTANT NO.: 22–3229	

ENGINEER'S SEAL

PROVINCE OF MANITOBA
C.A. LANGE
Member
37791
2023/07/20
REGISTERED PROFESSIONAL ENGINEER

Winnipeg
THE CITY OF WINNIPEG
WATER AND WASTE DEPARTMENT

RIVERBEND LIFT PUMPING STATION
2023 UPGRADES
LOOP DIAGRAM
MAIN LEVEL VENTILATION DAMPERS 1
FV–L601, FV–L602, FV–L603

CITY DRAWING NUMBER	SHEET	REV.	SIZE
1–0178L–A0020	001	0	B

B SIZE – 279mm x 432mm

LAST SAVE: 2023/07/20 – 3:23pm
PATH: C:\pw working directory\projects 2022\dillon_40zhl\dms07227\223229–04–LOOP–CON.dwg