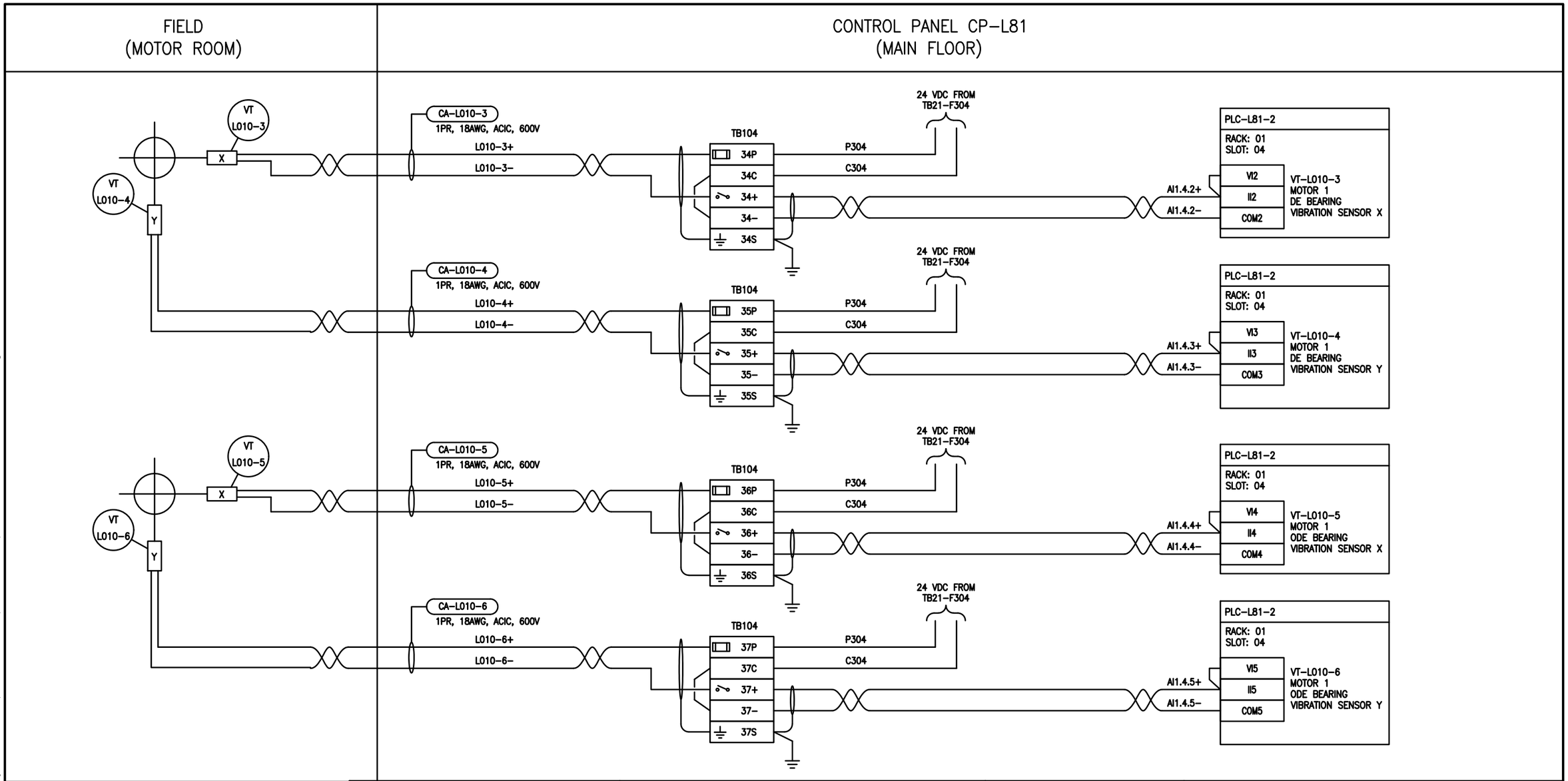

GENERAL NOTES:

1.

NOT FOR CONSTRUCTION

NO.	REVISIONS	DATE	DESIGN	CHECK
0	ISSUED FOR TENDER	2023/07/20	CAL	BLM

Dillon Consulting Limited
1558 Willson Place
Winnipeg, MB, Canada R3T 0Y4
204-453-2301

DESIGNED BY: CAL	CHECKED BY: BLM
DRAWN BY: SK	APPROVED BY: BLM
SCALE: NTS	DATE: MARCH 2023
ISSUED FOR CONSTRUCTION BY:	DATE:
CONSULTANT NO.: 22-3229	

ENGINEER'S SEAL

PROVINCE OF MANITOBA
C.A. LANGE
Member
37791
2023/07/20
REGISTERED PROFESSIONAL ENGINEER

THE CITY OF WINNIPEG
WATER AND WASTE DEPARTMENT

RIVERBEND LIFT PUMPING STATION
2023 UPGRADES
LOOP DIAGRAM
MOTOR 1 DE & ODE BEARING VIBRATION SENSOR X & Y
VT-L010-3, VT-L010-4, VT-L010-5, VT-L010-6

CITY DRAWING NUMBER	SHEET	REV.	SIZE
1-0178L-A0040	001	0	B

B SIZE - 279mm x 432mm

LAST SAVE: 2023/07/20 - 3:24pm
PATH: C:\pw working directory\projects 2022\dillon_40zhl\dms07227\223229-04-LOOP-CON.dwg