A1 SIZE - 594mm x 841mm

NOTES:

1. ALL ETHERNET CABLING SHALL BE CAT6.

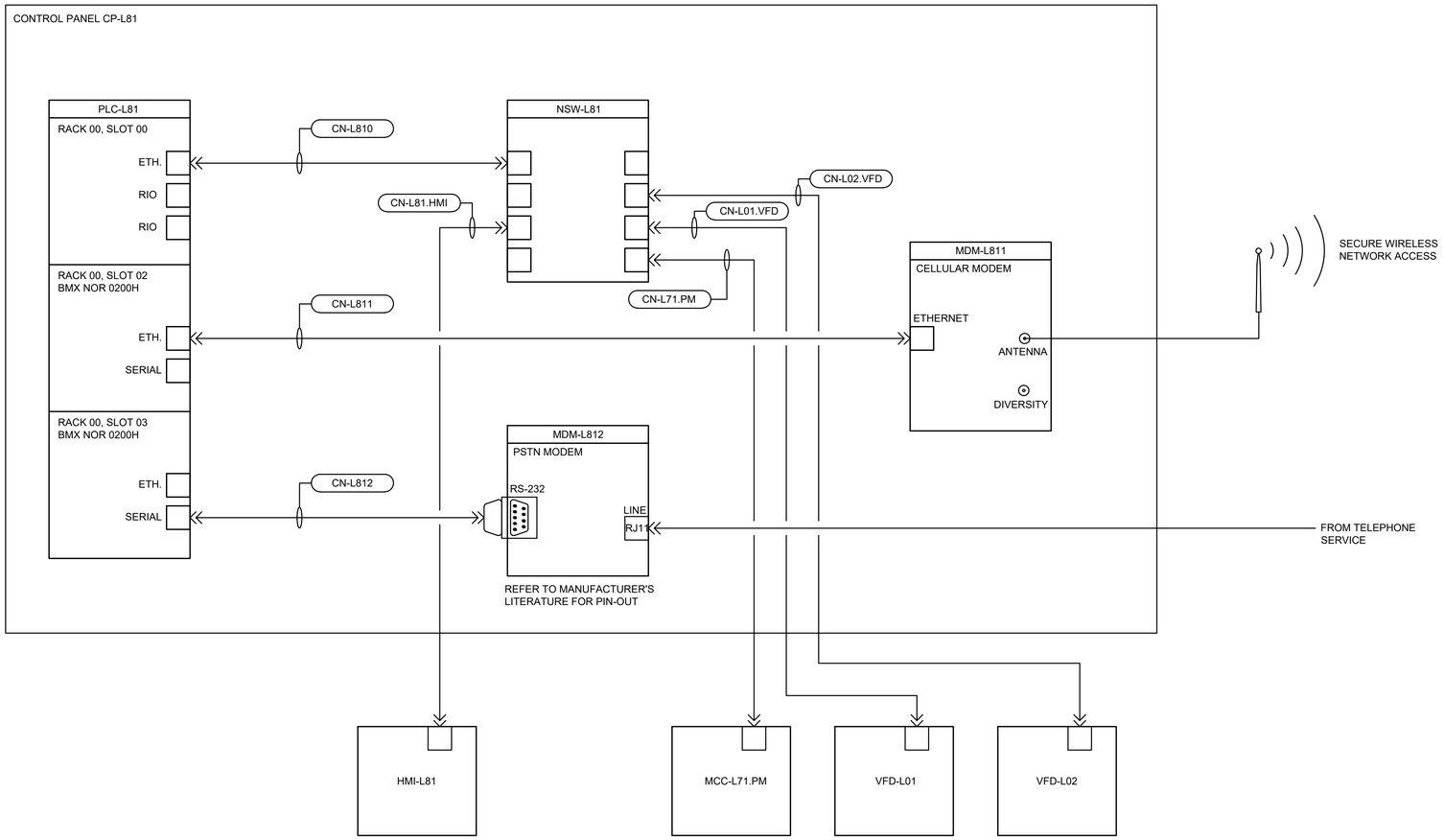

LEGEND:

- RJ45 PORT
- RJ45 OR RJ11 CONNECTOR
- D-SUB 9-PIN CONNECTOR

DRAWING NUMBER	REFERENCE DRAWINGS
1-0178L-A0002	PANEL LAYOUT & BILL OF MATERIAL CONTROL PANEL CP-L81

NOT FOR CONSTRUCTION

ISSUED FOR TENDER

ENGINEERS GEOSCIENTISTS MANITOBA
Certificate of Authorization
Dillon Consulting Limited (MB)
No. 1789 Date:

NO.	REVISIONS	DATE	DESIGN	CHECK
0	ISSUED FOR TENDER	2023/07/20	CAL	BLM

DILLON CONSULTING

DESIGNED BY: CAL	CHECKED BY: BLM
DRAWN BY: SK	APPROVED BY: BLM
SCALE: NTS	RELEASED FOR CONSTRUCTION BY:
DATE: MARCH 2023	DATE:
CONSULTANT NO.: 22-3229	

ENGINEER'S SEAL

PROVINCE OF MANITOBA
C.A. LANGE
Member
37791
2023/07/20
REGISTERED PROFESSIONAL ENGINEER

Winnipeg
THE CITY OF WINNIPEG
WATER AND WASTE DEPARTMENT

RIVERBEND LIFT PUMPING STATION
2023 UPGRADES
NETWORK DIAGRAM

CITY DRAWING NUMBER	SHEET	REV.	SIZE
1-0178L-A0003	001	0	A1

LAST SAVE: 2023/07/20 - 3:22pm
PATH: C:\pw working directory\projects 2022\dillon_40zntldms\07227\223229-04-NETWORK DIAGRAM.dwg

223229-04-NETWORK DIAGRAM.dwg