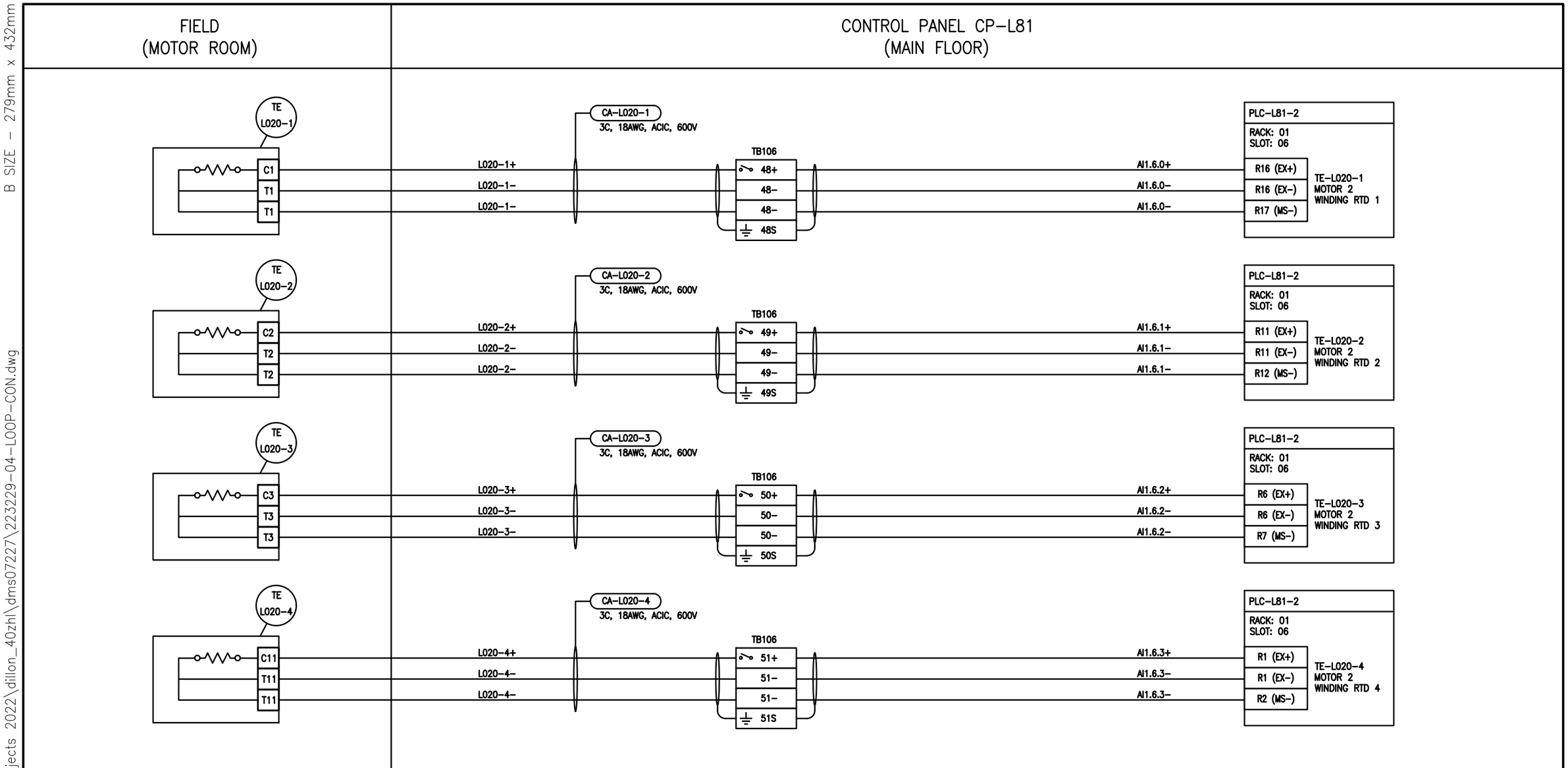


GENERAL NOTES:

1.

NOT FOR CONSTRUCTION

| NO. | REVISIONS | DATE | DESIGN | CHECK |
|---|---|---|---|---|
| 0 | ISSUED FOR TENDER | 2023/07/20 | CAL | BLM |


DILLON CONSULTING

Dillon Consulting Limited
1558 Willson Place
Winnipeg, MB, Canada R3T 0Y4
204-453-2301


| | |
|---|---|
| DESIGNED BY: CAL | CHECKED BY: BLM |
| DRAWN BY: SK | APPROVED BY: BLM |
| SCALE: NTS | DATE: MARCH 2023 |
| ISSUED FOR CONSTRUCTION BY: | DATE: |
| CONSULTANT NO.: 22-3229 | |

ENGINEER'S SEAL

PROVINCE OF MANITOBA
C.A. LANGE
Member
37791
2023/07/20
REGISTERED PROFESSIONAL ENGINEER

Winnipeg

THE CITY OF WINNIPEG
WATER AND WASTE DEPARTMENT

RIVERBEND LIFT PUMPING STATION
2023 UPGRADES
LOOP DIAGRAM
MOTOR 2 WINDING RTD
TE-L020-1, TE-L020-2, TE-L020-3, TE-L020-4

| CITY DRAWING NUMBER | SHEET | REV. | SIZE |
|---|---|---|---|
| 1-0178L-A0036 | 001 | 0 | B |

B SIZE - 279mm x 432mm

LAST SAVE: 2023/07/20 - 3:24pm
PATH: C:\pw working directory\projects 2022\dillon_40zhl\dms07227\223229-04-LOOP-CON.dwg