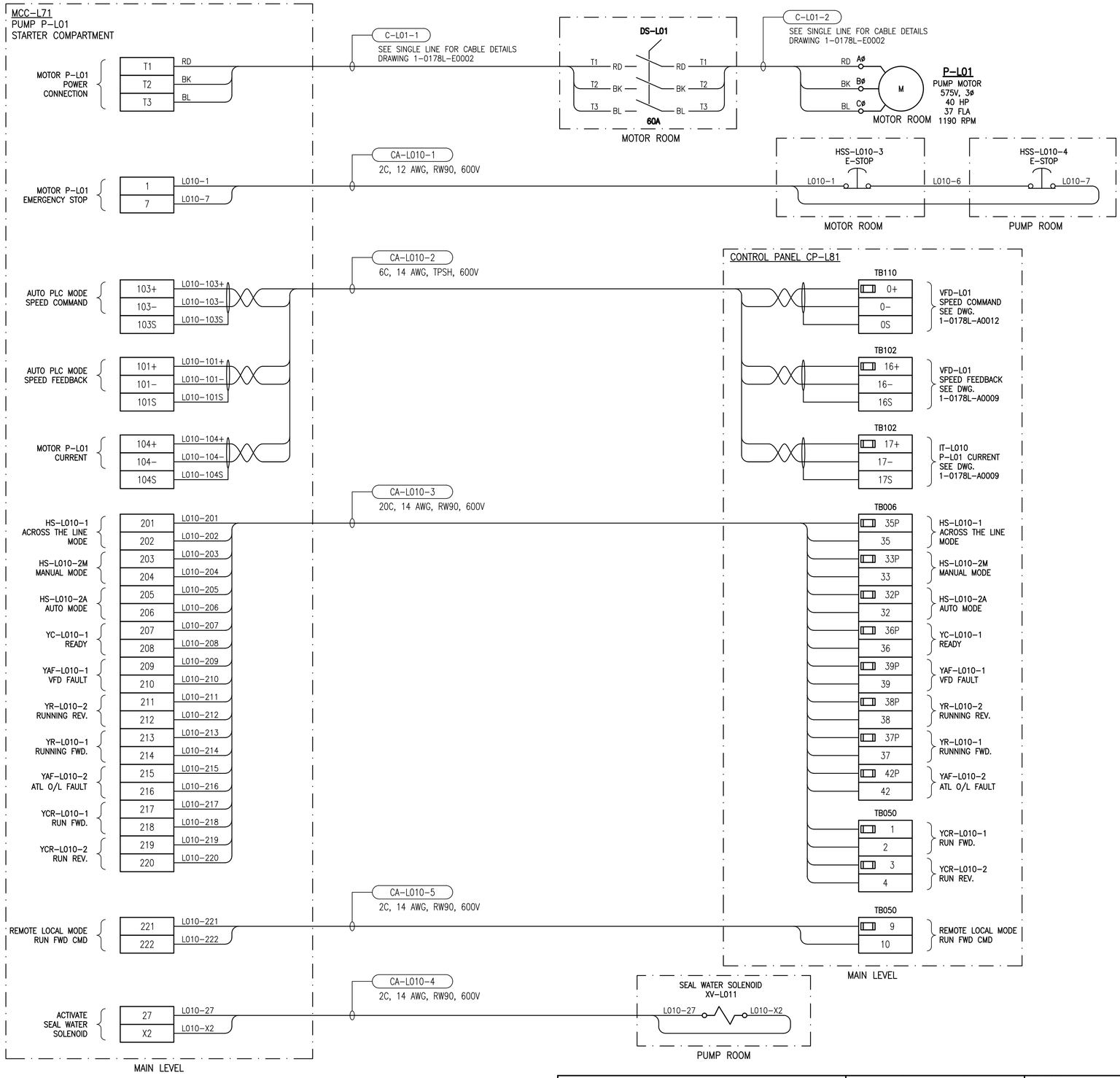

DRAWING NUMBER	REFERENCE DRAWINGS
1-0178L-E0008	MOTOR STARTER SCHEMATIC LIFT PUMP P-L01

NOT FOR CONSTRUCTION

ISSUED FOR TENDER

ENGINEERS GEOSCIENTISTS MANITOBA
Certificate of Authorization
Dillon Consulting Limited (MB)
No. 1789 Date:

NO.	REVISIONS	DATE	DESIGN	CHECK
0	ISSUED FOR TENDER	2023/07/20	CAL	BLM

DILLON CONSULTING

DESIGNED BY: CAL	CHECKED BY: BLM
DRAWN BY: SK	APPROVED BY: BLM
SCALE: NTS	RELEASED FOR CONSTRUCTION BY:
DATE: MARCH 2023	DATE:
CONSULTANT NO.: 22-3229	

ENGINEER'S SEAL

PROVINCE OF MANITOBA
C.A. LANGE
Member
37791
2023/07/20
REGISTERED PROFESSIONAL ENGINEER

Winnipeg
THE CITY OF WINNIPEG
WATER AND WASTE DEPARTMENT

RIVERBEND LIFT PUMPING STATION
2023 UPGRADES
MOTOR STARTER CONNECTION DIAGRAM
LIFT PUMP
P-L01

CITY DRAWING NUMBER	SHEET	REV.	SIZE
1-0178L-E0009	001	0	A1

223229-04-MS CONNECTION P-L

A1 SIZE - 594mm x 841mm

LAST SAVE: 2023/07/20 - 3:21pm
PATH: C:\pw working directory\projects 2022\dillon_40zn\dms07227\223229-04-MS CONNECTION P-L01-CON.dwg