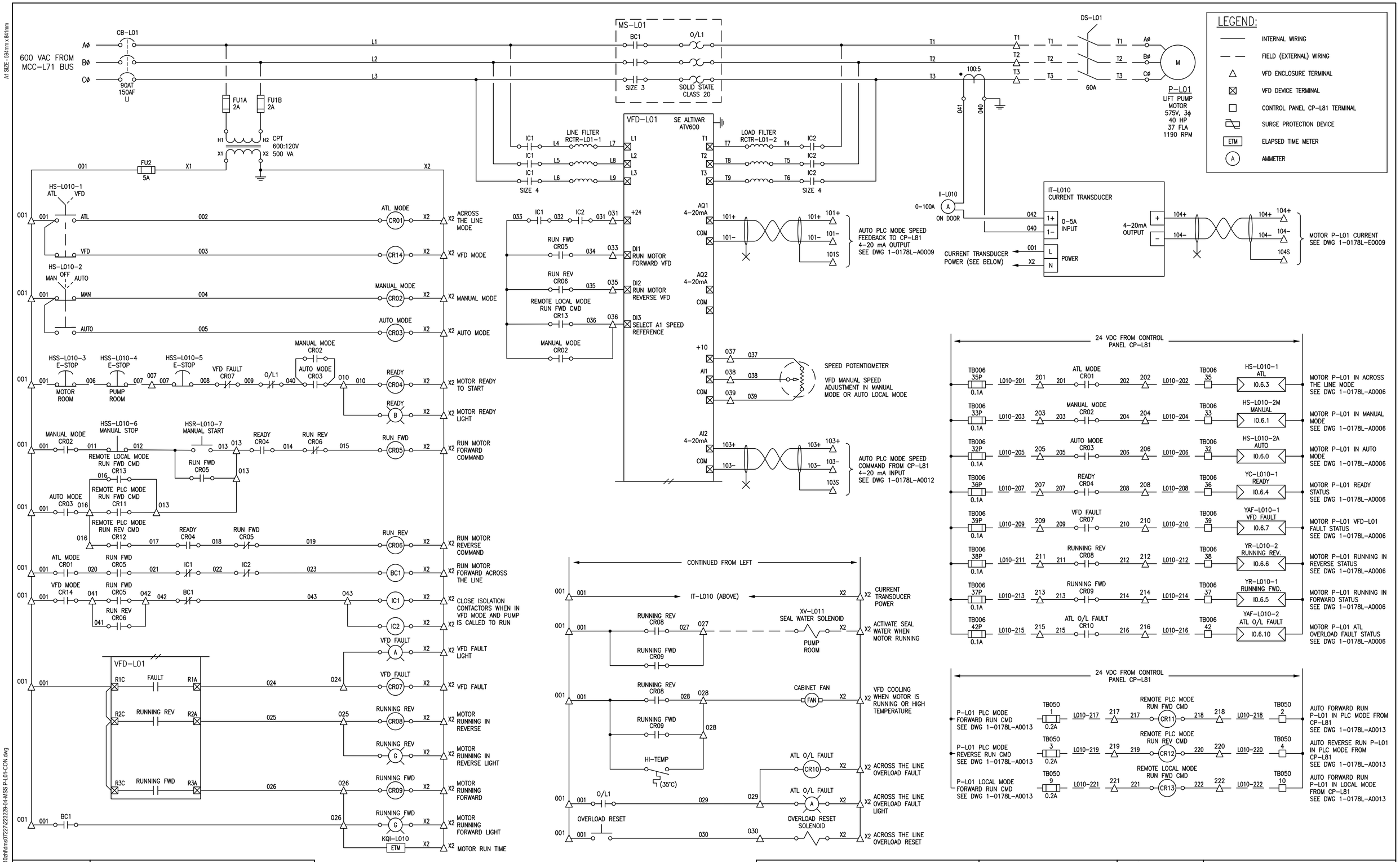

DRAWING NUMBER	REFERENCE DRAWINGS
1-0178L-E0009	MOTOR STARTER CONNECTION DIAGRAM LIFT PUMP P-L01
1-0178L-E0002	ELECTRICAL SINGLE LINE DIAGRAM

NOT FOR CONSTRUCTION

ISSUED FOR TENDER

ENGINEERS GEOSCIENTISTS MANITOBA
Certificate of Authorization
Dillon Consulting Limited (MB)
No. 1789 Date:

NO.	REVISIONS	DATE	DESIGN	CHECK
0	ISSUED FOR TENDER	2023/07/20	CAL	BLM

DILLON CONSULTING

DESIGNED BY: CAL	CHECKED BY: BLM
DRAWN BY: CAL	APPROVED BY: BLM
SCALE: NTS	RELEASED FOR CONSTRUCTION BY:
DATE: MARCH 2023	DATE:
CONSULTANT NO.: 22-3229	

ENGINEER'S SEAL
PROVINCE OF MANITOBA C.A. LANGE Member 27791 2023/07/20 REGISTERED PROFESSIONAL ENGINEER

THE CITY OF WINNIPEG
WATER AND WASTE DEPARTMENT

RIVERBEND LIFT PUMPING STATION
2023 UPGRADES
MOTOR STARTER SCHEMATIC
LIFT PUMP
P-L01

CITY DRAWING NUMBER	SHEET	REV.	SIZE
1-0178L-E0008	001	0	A1

223229-04-MSS P-L01-CON.dwg

A1 SIZE - 594mm x 841mm

LAST SAVE: 2023/07/20 - 3:21pm
PATH: C:\pw working directory\projects 2022\dillon_40zh\dms0727\223229-04-MSS P-L01-CON.dwg