A1 SIZE - 594mm x 841mm

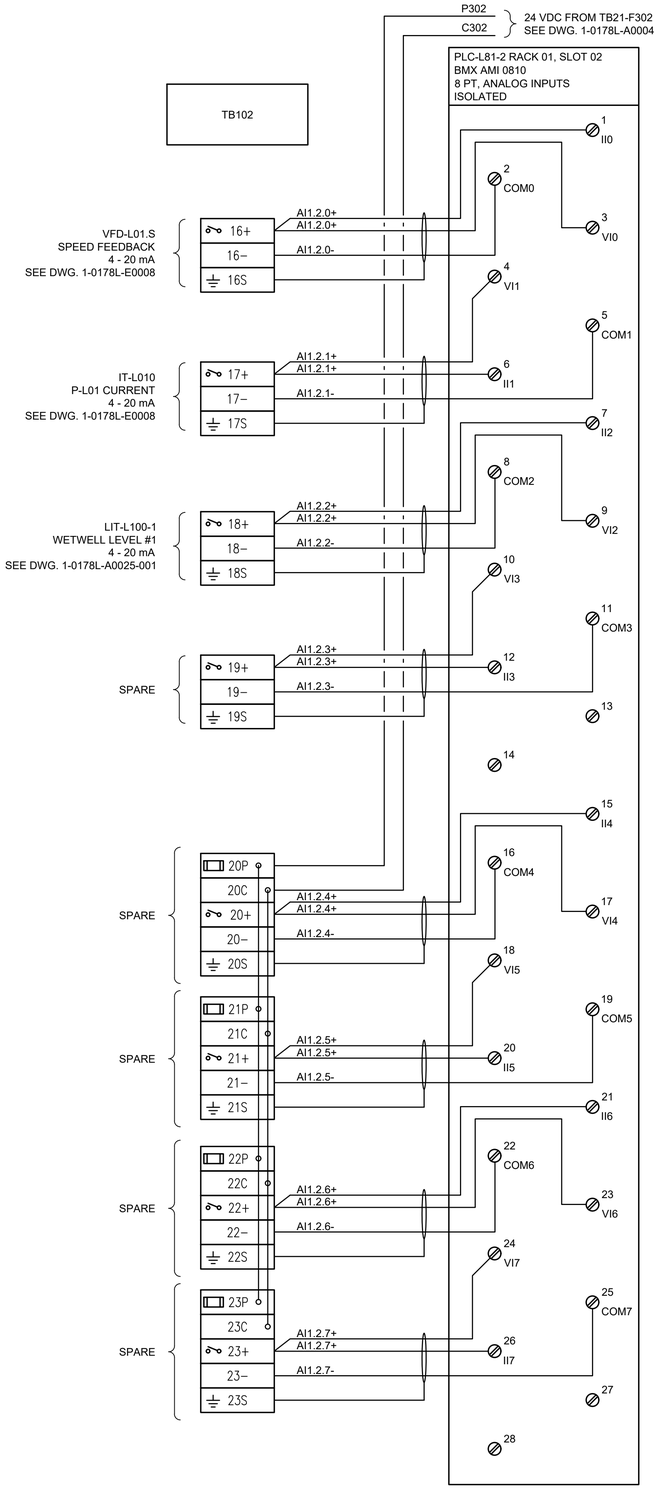

FUSE SCHEDULE		
TB	IDENTIFIER	RATED CURRENT (A) FA
TB102	-	-
	-	-
	-	-
	-	-
	20P	1
	21P	1
	22P	1
	23P	1

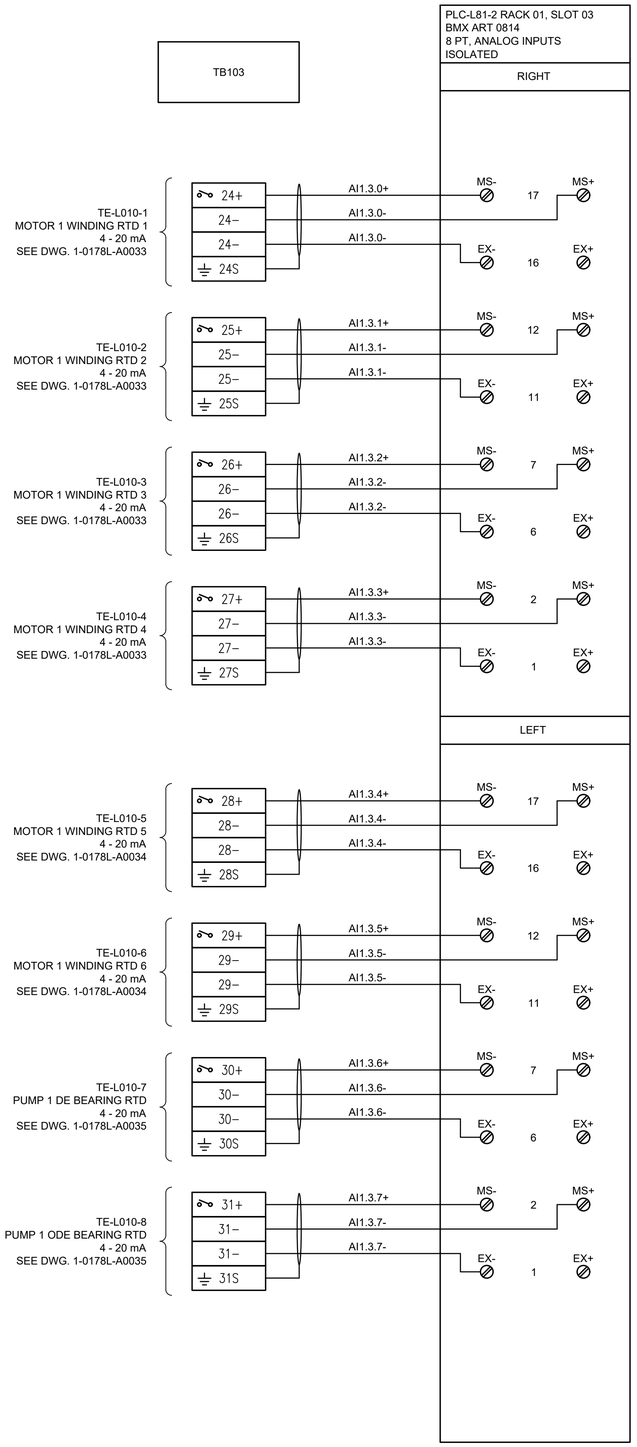

1. NOT CONNECTED (NC) TERMINALS HAVE NOT BEEN SHOWN FOR CLARITY.

DRAWING NUMBER	REFERENCE DRAWINGS
1-0178L-A0004	POWER DISTRIBUTION SCHEMATIC CONTROL PANEL CP-L81
1-0178L-A0002	PANEL LAYOUT & BILL OF MATERIAL CONTROL PANEL CP-L81

NOT FOR CONSTRUCTION

ISSUED FOR TENDER

ENGINEERS GEOSCIENTISTS MANITOBA
Certificate of Authorization
Dillon Consulting Limited (MB)
No. 1789 Date:

NO.	REVISIONS	DATE	DESIGN	CHECK
0	ISSUED FOR TENDER	2023/07/20	CAL	BLM

DILLON CONSULTING

DESIGNED BY: CAL	CHECKED BY: BLM
DRAWN BY: SK	APPROVED BY: BLM
SCALE: NTS	RELEASED FOR CONSTRUCTION BY:
DATE: MARCH 2023	DATE:
CONSULTANT NO.: 22-3229	

ENGINEER'S SEAL
PROVINCE OF MANITOBA
C.A. LANGE
Member
37791
2023/07/20
REGISTERED PROFESSIONAL ENGINEER

Winnipeg
THE CITY OF WINNIPEG
WATER AND WASTE DEPARTMENT

RIVERBEND LIFT PUMPING STATION
2023 UPGRADES
PLC I/O WIRING DIAGRAM
CONTROL PANEL CP-L81
ANALOG INPUTS RACK 01, SLOT 02 & 03

CITY DRAWING NUMBER	SHEET	REV.	SIZE
1-0178L-A0009	001	0	A1

223229-04-PLC IO-CON.dwg

LAST SAVE: 2023/07/20 - 4:14pm
PATH: C:\pw working directory\projects 2022\dillon_40zh\dms07227\223229-04-PLC IO-CON.dwg