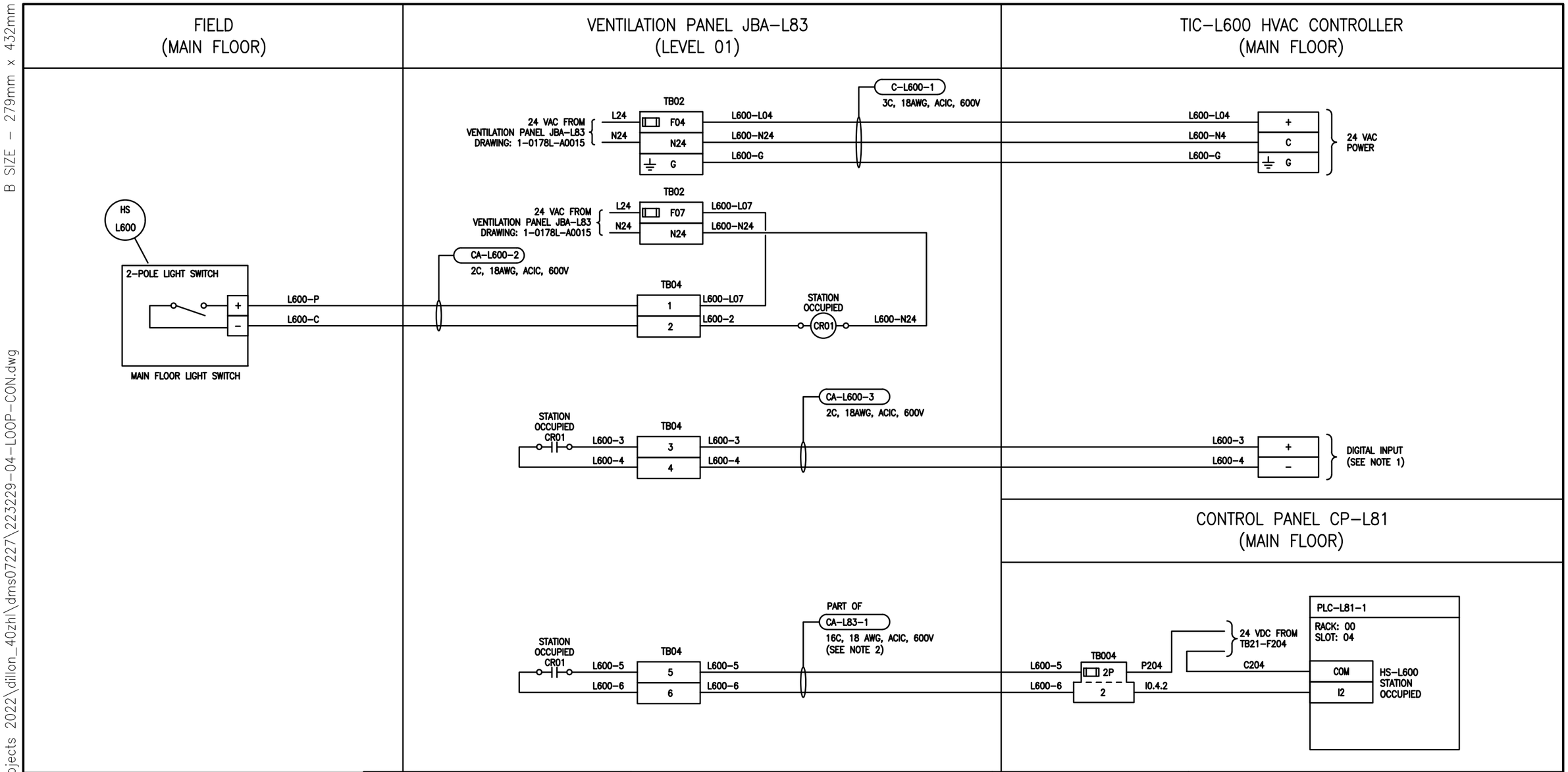

GENERAL NOTES:

1. THE MAIN FLOOR VENTILATION INTAKE (FV–L601), LEVEL 01 VENTILATION INTAKE (FV–L604), AND EXHAUST (FV–L603) DAMPERS ARE COMMANDED TO OPEN 100% WHEN THIS DIGITAL INPUT IS ACTIVE. THE MAIN FLOOR DUCT HEATER HCE–L60 AND THE MOTOR ROOM DUCT HEATER HCE–L68 ARE CONTINUOUSLY PID CONTROLLED WITH TEMPERATURE SET POINT ADJUSTMENTS WHEN THIS DIGITAL INPUT IS ACTIVE. THE DIGITAL INPUT IS ACTIVATED BY THE LIGHT SWITCH (STATION OCCUPANCY). SEE DRAWING 1–0178L–A0020 FOR THE MAIN FLOOR VENTILATION DAMPER CONTROL LOOP DIAGRAM. SEE DRAWING 1–0178L–A0019 FOR DUCT HEATER HCE–L60 CONTROL LOOP DIAGRAM. SEE DRAWING 1–0178L–A0021 FOR DUCT HEATER HCE–L68 CONTROL LOOP DIAGRAM.

2. NOT ALL CONDUCTORS ARE SHOWN ON THIS DRAWING.

NOT FOR CONSTRUCTION

NO.	REVISIONS	DATE	DESIGN	CHECK
0	ISSUED FOR TENDER	2023/07/20	CAL	BLM

Dillon Consulting Limited
1558 Willson Place
Winnipeg, MB, Canada R3T 0Y4
204–453–2301

DESIGNED BY: CAL	CHECKED BY: BLM
DRAWN BY: SK	APPROVED BY: BLM
SCALE: NTS	DATE: MARCH 2023
ISSUED FOR CONSTRUCTION BY:	DATE:
CONSULTANT NO.: 22–3229	

ENGINEER'S SEAL

PROVINCE OF MANITOBA
C.A. LANGE
Member
37791
2023/07/20
REGISTERED PROFESSIONAL ENGINEER

THE CITY OF WINNIPEG
WATER AND WASTE DEPARTMENT

RIVERBEND LIFT PUMPING STATION
2023 UPGRADES
LOOP DIAGRAM
STATION OCCUPIED LIGHT SWITCH
HS–L600

CITY DRAWING NUMBER	SHEET	REV.	SIZE
1–0178L–A0018	001	0	B

B SIZE – 279mm x 432mm

LAST SAVE: 2023/07/20 – 3:23pm
PATH: C:\pw working directory\projects 2022\dillon_40zhl\dms07227\223229–04–LOOP–CON.dwg