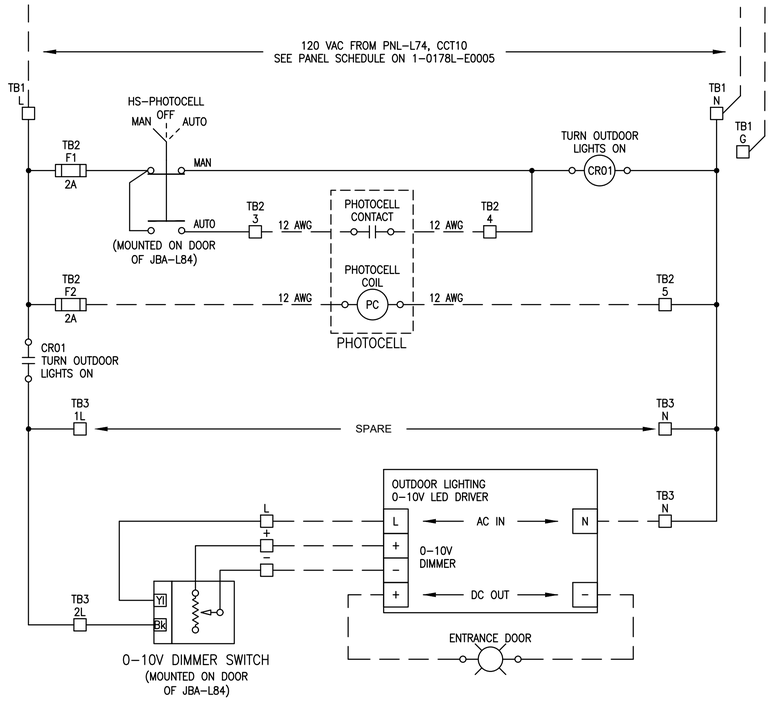

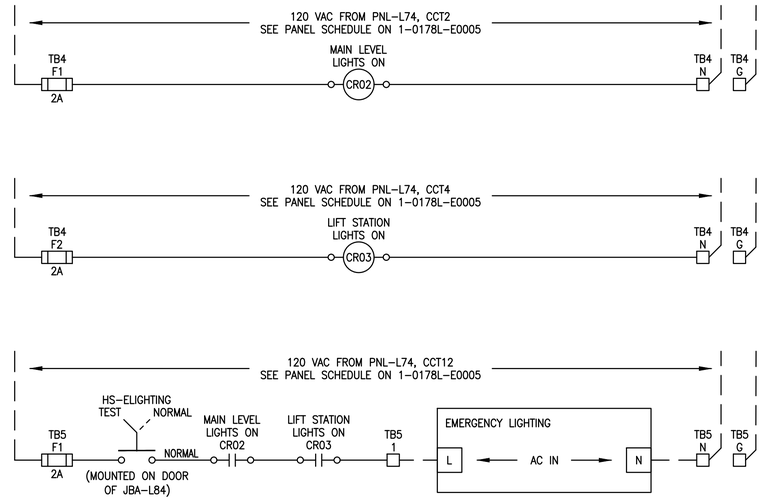

LIGHTING CONTROL JUNCTION BOX MATERIAL LIST

ITEM	QTY	DESCRIPTION	MANUFACTURER	CATALOG NUMBER
1	1	OUTDOOR PHOTOCELL	PRECISION	ST-15 SERIES
2	1	SINGLE-DOOR TYPE 12&13 WALL-MOUNTED ENCLOSURE, 16" HEIGHT x 12" WIDTH x 6" DEPTH, COMPLETE WITH LAMACOID (ITEM 17)	HOFFMAN	A1612CH
3	1	BACKPAN, 16" HEIGHT x 12" WIDTH	HOFFMAN	A16P12
4	AS REQ'D	35mm DIN RAIL	PHOENIX CONTACT	0801733
5	AS REQ'D	FEED-THROUGH TERMINAL	PHOENIX CONTACT	3046184
6	AS REQ'D	FUSE TERMINAL	PHOENIX CONTACT	3046142
7	AS REQ'D	FUSE CONNECTOR	PHOENIX CONTACT	3036806
8	AS REQ'D	POTENTIAL EARTH TERMINAL	PHOENIX CONTACT	3046207
9	AS REQ'D	TERMINAL END PLATE	PHOENIX CONTACT	3047141
10	AS REQ'D	TERMINAL END CLAMP	PHOENIX CONTACT	1201442
11	AS REQ'D	PLUG-IN BRIDGE	PHOENIX CONTACT	3030365
12	AS REQ'D	TERMINAL BLOCK MARKER	PHOENIX CONTACT	1004348
13	3	RELAY, 120 VAC, SPDT, LED	OMRON	LY1N-AC110/120
14	3	RELAY BASE, SPDT	OMRON	PTF08A-E
15	1	3-POSITION MAINTAINED 30MM SWITCH COMPLETE WITH LAMACOID (ITEM 17) 'MAN', 'OFF', 'AUTO'	SCHNEIDER ELECTRIC	9001KS43BH13
16	1	2-POSITION MAINTAINED 30MM SWITCH COMPLETE WITH LAMACOID (ITEM 17) 'TEST' AND 'NORMAL'	SCHNEIDER ELECTRIC	9001KS11BH13
17	AS REQ'D	LAMACOID, WHITE PLATE WITH BLACK TEXT	-	-
18	1	0-10V SLIDE DIMMER SWITCH	COOPER LIGHTING	WBSD-010SLD
19	1	0-10V LED DIMMING DRIVER	COOPER LIGHTING	INTEGRAL TO LUMINAIRE

DRAWING NUMBER	REFERENCE DRAWINGS
1-0178L-E0006	ELECTRICAL LIGHTING PLAN LAYOUT
1-0178L-E0005	ELECTRICAL POWER PLAN LAYOUT

NOT FOR CONSTRUCTION

ISSUED FOR TENDER

ENGINEERS GEOSCIENTISTS MANITOBA
Certificate of Authorization
Dillon Consulting Limited (MB)
No. 1789 Date: _____

NO.	REVISIONS	DATE	DESIGN	CHECK
0	ISSUED FOR TENDER	2023/07/20	CAL	BLM

DILLON CONSULTING

DESIGNED BY: CAL
CHECKED BY: BLM
DRAWN BY: SK
APPROVED BY: BLM
SCALE: NTS
RELEASED FOR CONSTRUCTION BY:
DATE: MARCH 2023
DATE:
CONSULTANT NO.: 22-3229

ENGINEER'S SEAL
PROVINCE OF MANITOBA
C.A. LANGE
Member
37791
2023/07/20
REGISTERED PROFESSIONAL ENGINEER

Winnipeg
THE CITY OF WINNIPEG
WATER AND WASTE DEPARTMENT

RIVERBEND LIFT PUMPING STATION
2023 UPGRADES
LIGHTING CONTROL DETAILS
JBA-L84

CITY DRAWING NUMBER	SHEET	REV.	SIZE
1-0178L-E0015	001	0	A1

223229-04-JBA-L84 LIGHTING CO

A1 SIZE - 594mm x 841mm

LAST SAVE: 2023/07/20 - 3:22pm
PATH: C:\pw working directory\projects 2022\dillon_40zn\fsmsl\727\223229-04-JBA-L84 LIGHTING CONTROL BOX-CON.dwg