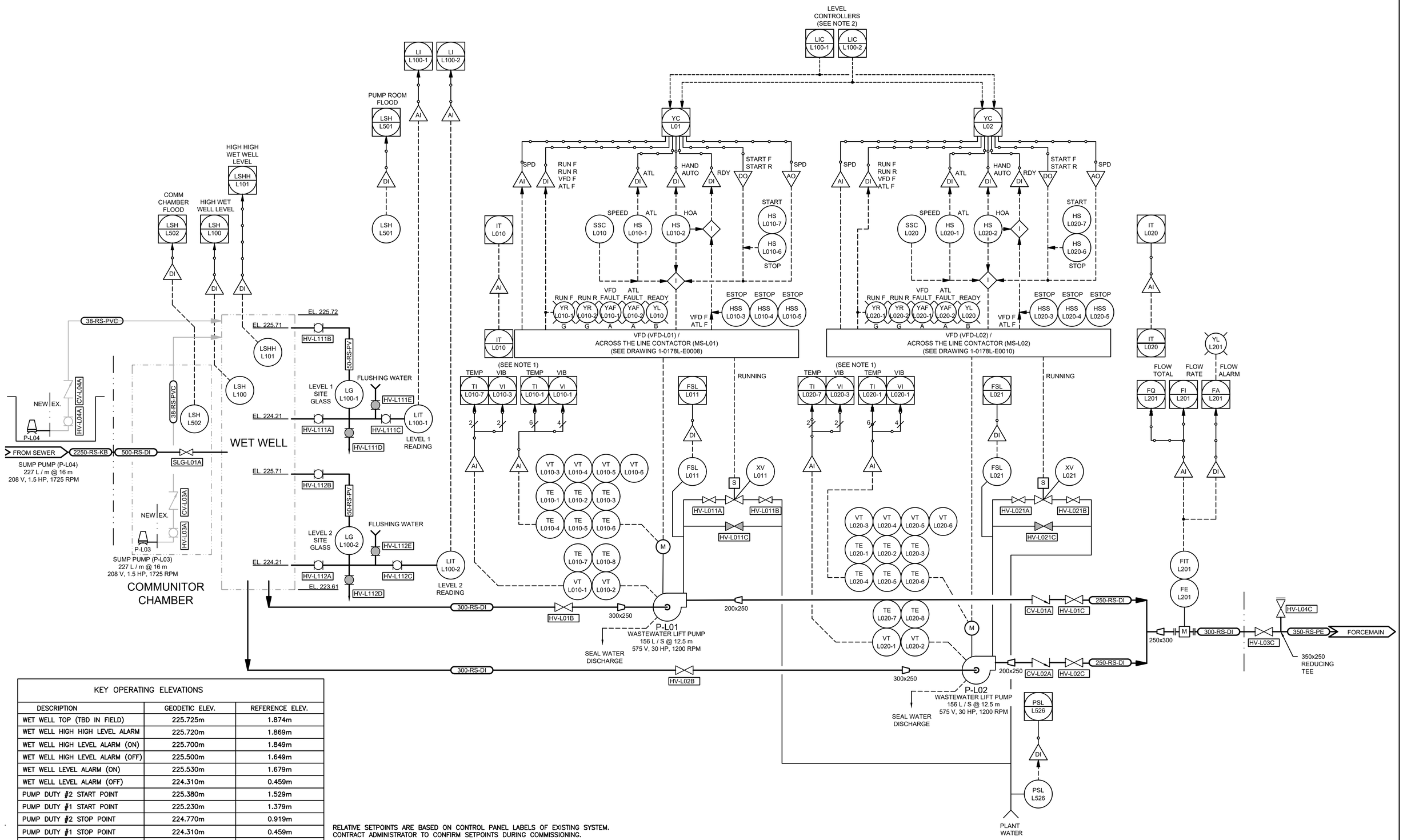

KEY OPERATING ELEVATIONS		
DESCRIPTION	GEODETIC ELEV.	REFERENCE ELEV.
WET WELL TOP (TBD IN FIELD)	225.725m	1.874m
WET WELL HIGH HIGH LEVEL ALARM	225.720m	1.869m
WET WELL HIGH LEVEL ALARM (ON)	225.700m	1.849m
WET WELL HIGH LEVEL ALARM (OFF)	225.500m	1.649m
WET WELL LEVEL ALARM (ON)	225.530m	1.679m
WET WELL LEVEL ALARM (OFF)	224.310m	0.459m
PUMP DUTY #2 START POINT	225.380m	1.529m
PUMP DUTY #1 START POINT	225.230m	1.379m
PUMP DUTY #2 STOP POINT	224.770m	0.919m
PUMP DUTY #1 STOP POINT	224.310m	0.459m
WET WELL BOTTOM	223.851m	000.00m

RELATIVE SETPOINTS ARE BASED ON CONTROL PANEL LABELS OF EXISTING SYSTEM.
CONTRACT ADMINISTRATOR TO CONFIRM SETPOINTS DURING COMMISSIONING.

DRAWING NUMBER	REFERENCE DRAWINGS
1-0178L-A0025-002	LOOP DIAGRAM LEVEL CONTROLLER AND TRANSMITTER LIC-L100-2
1-0178L-A0025-001	LOOP DIAGRAM LEVEL CONTROLLER AND TRANSMITTER LIC-L100-1
1-0178L-A0013	CONTROL SCHEMATIC CONTROL PANEL CP-L81 PUMP CONTROL
1-0178L-E0010	MOTOR STARTER CONNECTION DIAGRAM LIFT PUMP P-L02
1-0178L-E0008	MOTOR STARTER CONNECTION DIAGRAM LIFT PUMP P-L01

1. ONLY THE FIRST PUMP/MOTOR TEMPERATURE AND VIBRATION PLC INPUTS HAVE BEEN SHOWN FOR CLARITY. REFER TO THE AUTOMATION LOOP DRAWINGS 1-0178L-A0033 THROUGH 1-0178L-A0042 FOR DETAILS.
2. NOT ALL CONNECTION DETAILS HAVE BEEN SHOWN FOR CLARITY. LOCAL MODE PUMP CONTROL DETAILS ARE SHOWN ON DRAWING 1-0178L-A0013. LEVEL CONTROLLER DETAILS ARE SHOWN ON 1-0178L-A0025.

NOT FOR CONSTRUCTION

ISSUED FOR TENDER

ENGINEERS GEOSCIENTISTS MANITOBA
Certificate of Authorization
Dillon Consulting Limited (MB)
No. 1789 Date:

NO.	REVISIONS	DATE	DESIGN	CHECK
0	ISSUED FOR TENDER	2023/07/20	CP	BLM

DILLON CONSULTING

DESIGNED BY: CP	CHECKED BY: TC
DRAWN BY: SMZ	APPROVED BY: BLM
SCALE: NTS	RELEASED FOR CONSTRUCTION BY:
DATE: JUNE 2023	DATE:
CONSULTANT NO.: 22-3229	

ENGINEER'S SEAL
PROVINCE OF MANITOBA
C.N. POGUE
Member
35962
07/20/23
REGISTERED PROFESSIONAL ENGINEER

THE CITY OF WINNIPEG
WATER AND WASTE DEPARTMENT

RIVERBEND LIFT PUMPING STATION
2023 UPGRADES
PROCESS AND INSTRUMENTATION DIAGRAM
WASTEWATER LIFT PUMPING

CITY DRAWING NUMBER	SHEET	REV.	SIZE
1-0178L-P0003	001	C	A1

223229-10-P&ID-CON.dwg

A1 SIZE - 594mm x 841mm

LAST SAVE: 2023/07/20 - 3:57pm
PATH: C:\pw working directory\projects 2022\dillon_40zn\dms03893\223229-1\0-P&ID-CON.dwg