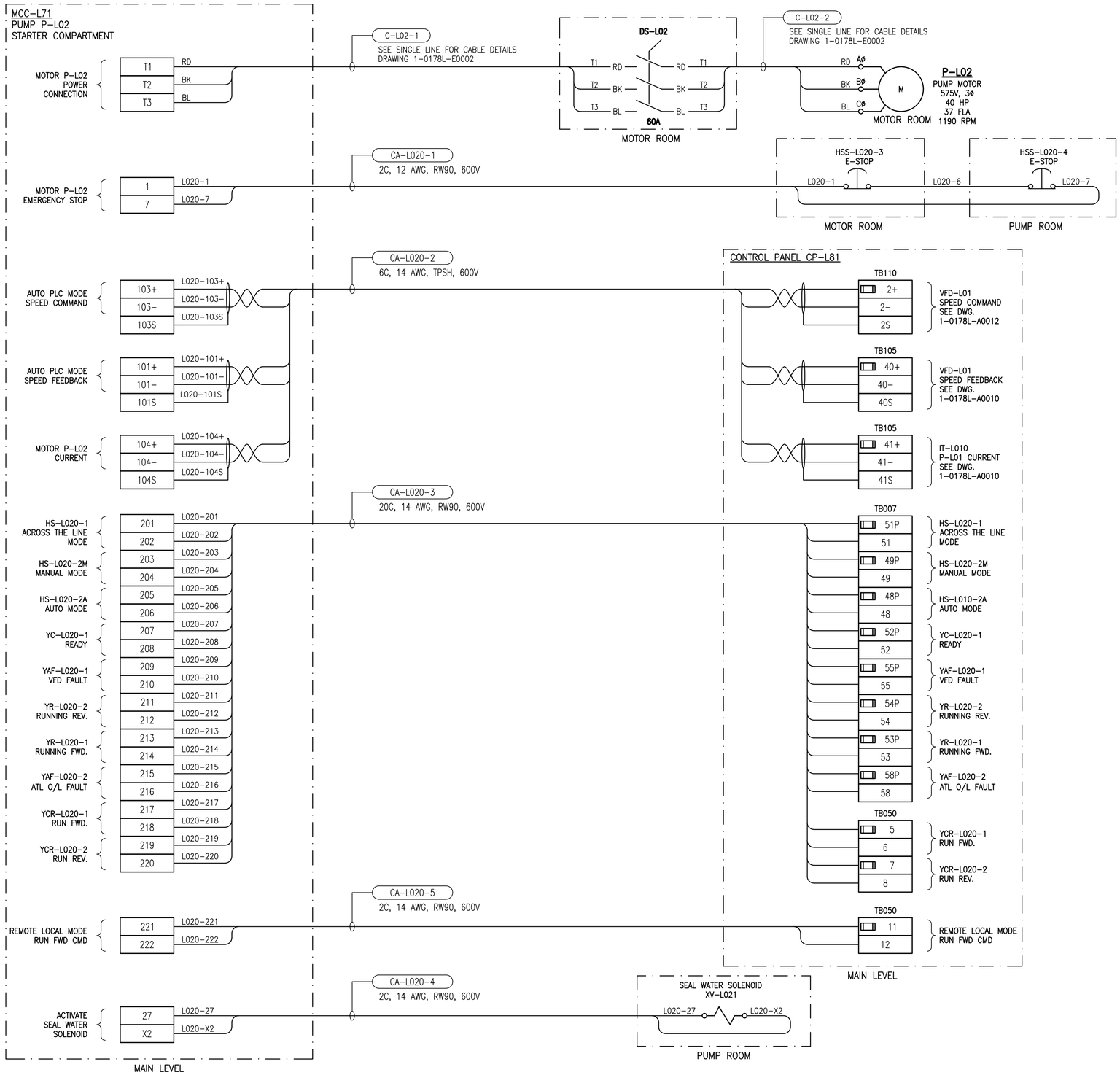


| | |
|---|---|
| 1-0178L-E0010 | MOTOR STARTER SCHEMATIC LIFT PUMP P-L02 |
| DRAWING NUMBER | REFERENCE DRAWINGS |

NOT FOR CONSTRUCTION

ISSUED FOR TENDER

ENGINEERS GEOSCIENTISTS MANITOBA
Certificate of Authorization
Dillon Consulting Limited (MB)
No. 1789 Date:

| NO. | REVISIONS | DATE | DESIGN | CHECK |
|---|---|---|---|---|
| 0 | ISSUED FOR TENDER | 2023/07/20 | CAL | BLM |

DILLON CONSULTING

| | |
|---|---|
| DESIGNED BY: CAL | CHECKED BY: BLM |
| DRAWN BY: SK | APPROVED BY: BLM |
| SCALE: NTS | RELEASED FOR CONSTRUCTION BY: |
| DATE: MARCH 2023 | DATE: |
| CONSULTANT NO.: 22-3229 | |

ENGINEER'S SEAL
PROVINCE OF MANITOBA
C.A. LANGE
Member
27791
2023/07/20
REGISTERED PROFESSIONAL ENGINEER

Winnipeg
THE CITY OF WINNIPEG
WATER AND WASTE DEPARTMENT

RIVERBEND LIFT PUMPING STATION
2023 UPGRADES
MOTOR STARTER CONNECTION DIAGRAM
LIFT PUMP
P-L02

| CITY DRAWING NUMBER | SHEET | REV. | SIZE |
|---|---|---|---|
| 1-0178L-E0011 | 001 | 0 | A1 |

223229-04-MS CONNECTION P-L

A1 SIZE - 594mm x 841mm

LAST SAVE: 2023/07/20 - 3:21pm
PATH: C:\pw working directory\projects 20\22\dillon_40zhfdms\07\22\223229-04-MS CONNECTION P-L02-CON.dwg