A1 SIZE - 594mm x 841mm

GENERAL NOTES:

1. WHEN CONTROL PANEL CP-L81 IS SET TO "PLC MODE", THE LIFT PUMPS ARE AUTOMATICALLY STARTED BY PLC-L81 HEN A HIGH WET WELL LEVEL SETPOINT IS DETECTED. WHEN CONTROL PANEL CP-L81 IS SET TO "LOCAL" MODE, THE LIFT PUMPS ARE AUTOMATICALLY STARTED BY LIC-L100-1 OR LIC-L100-2 RELAY CONTACTS WHEN A HIGH WE WELL LEVEL SETPOINT IS DETECTED.

2. IF PLC-L81 FAILS, THE SUSTEM WILL AUTOMATICALLY TRANSFER TO "LOCAL MODE" OPERATION. THE ONLY METHOD OF RETURNING THE SYSTEM INTO "PLC MODE" IS BY MANUALLY PUSHING THE PLC MODE PUSH BUTTON ON CONTROL PANEL CP-L81 DOOR.

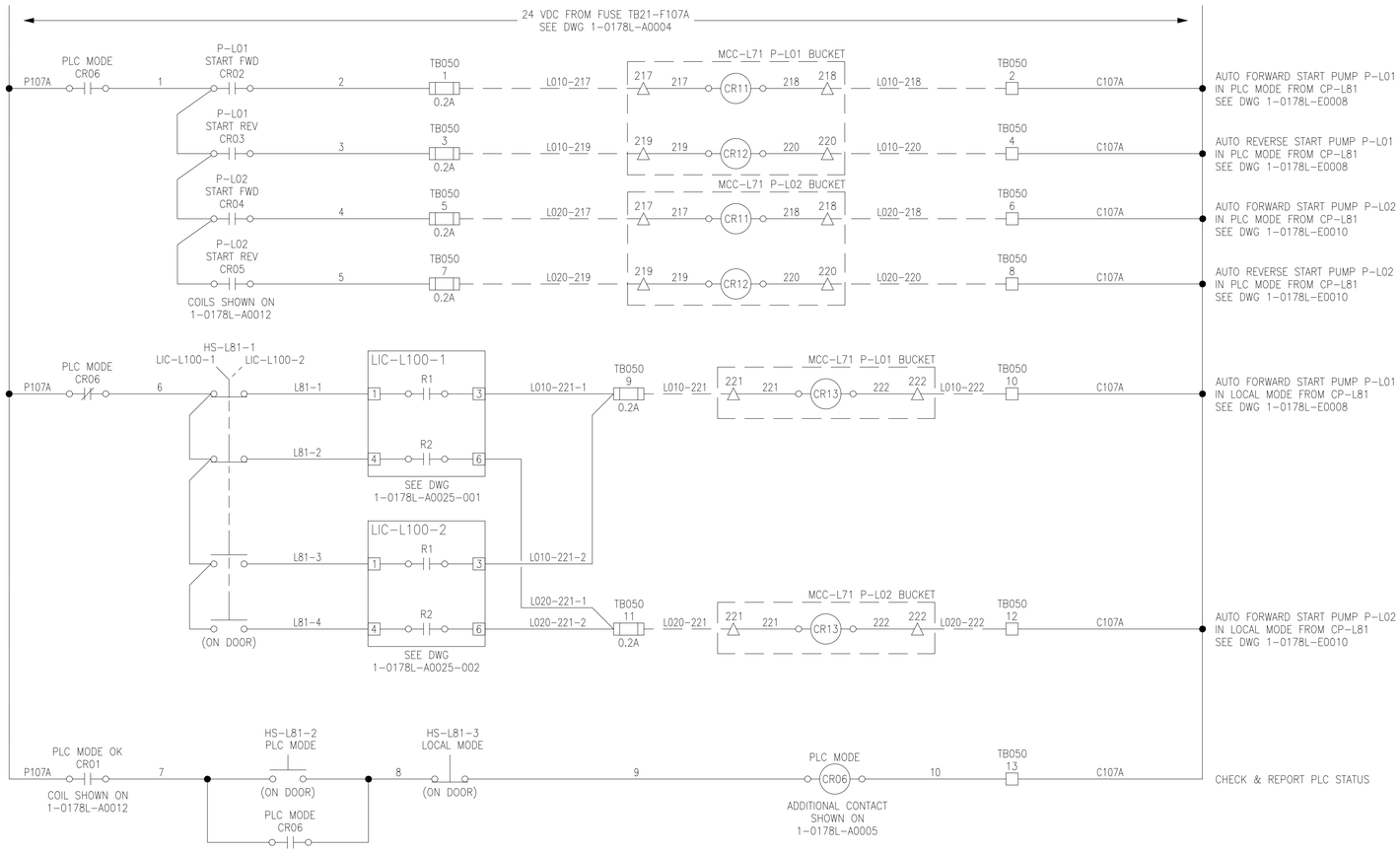

AUTOMATIC PUMP CONTROL AND PLC MODE

DRAWING NUMBER	REFERENCE DRAWINGS
1-0178L-A0004	POWER DISTRIBUTION SCHEMATIC CONTROL PANEL CP-L81
1-0178L-E0010	MOTOR STARTER CONNECTION DIAGRAM LIFT PUMP P-L02
1-0178L-E0008	MOTOR STARTER CONNECTION DIAGRAM LIFT PUMP P-L01

NOT FOR CONSTRUCTION

ISSUED FOR TENDER

ENGINEERS GEOSCIENTISTS MANITOBA
Certificate of Authorization
Dillon Consulting Limited (MB)
No. 1789 Date:

NO.	REVISIONS	DATE	DESIGN	CHECK
0	ISSUED FOR TENDER	2023/07/20	CAL	BLM

DILLON CONSULTING

DESIGNED BY: CAL
CHECKED BY: BLM
DRAWN BY: SK
APPROVED BY: BLM
SCALE: NTS
RELEASED FOR CONSTRUCTION BY:
DATE: MARCH 2023
DATE:
CONSULTANT NO.: 22-3229

ENGINEER'S SEAL
PROVINCE OF MANITOBA
C.A. LANGE
Member
27791
2023/07/20
REGISTERED PROFESSIONAL ENGINEER

Winnipeg
THE CITY OF WINNIPEG
WATER AND WASTE DEPARTMENT

RIVERBEND LIFT PUMPING STATION
2023 UPGRADES
PUMP CONTROL SCHEMATIC
CONTROL PANEL CP-L81
LOCAL MODE AND PLC MODE OPERATION

CITY DRAWING NUMBER	SHEET	REV.	SIZE
1-0178L-A0013	001	0	A1

223229-04-Pump Control Schem

LAST SAVE: 2023/07/20 - 3:23pm
PATH: C:\pw working directory\projects 20\22\dillon_40zhlldmsd\72\223229-04-Pump Control Schematic.dwg

EXTERIOR PANEL VIEW
SCALE: 1:2