A1 SIZE - 594mm x 841mm

MCC–L71 REQUIREMENTS:

IDENTIFIER: MCC–L71		
ENCLOSURE TYPE: NEMA 1A	MOUNTING: FRONT	DEPTH: 508mm
SUPPLY VOLTAGE: 600V, 3ø, 4W, 60 Hz		INCOMING NEUTRAL TERMINATION: YES
CONTROL VOLTAGE: 120V, 60 Hz	WIRING: CLASS I, TYPE Bd OR Bt AS SHOWN ON THE DRAWINGS	
MINIMUM BUS RATING:	HORIZONTAL: 400A	VERTICAL: AS REQ'D
SUITABLE FOR SERVICE ENTRANCE: YES		NEUTRAL BUS: YES
BUS BRACING: 42kA	SCCR: 25 kA	SERIES SCCR PERMITTED: NO
BUS MATERIAL: TIN PLATED COPPER		
MANUFACTURER: SCHNEIDER ELECTRIC		MODEL: MODEL 6

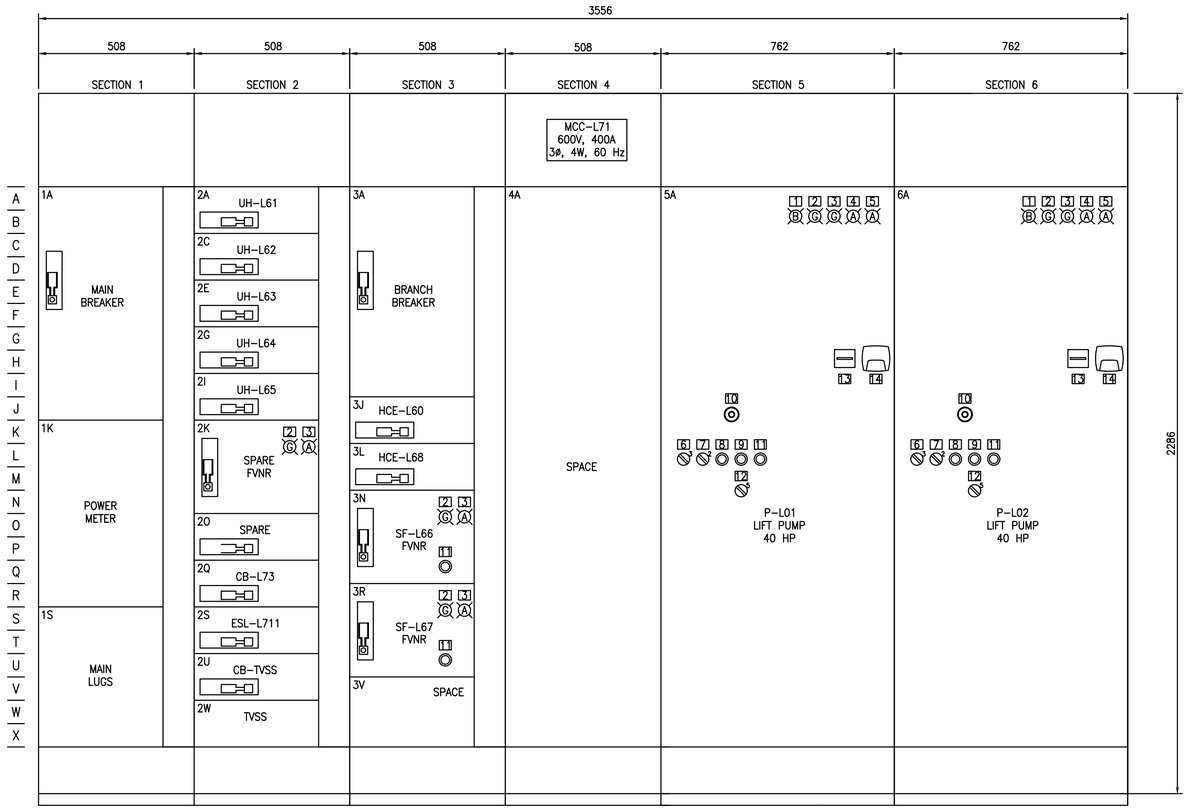

MCC-L71 ELEVATION
SCALE: 1:10

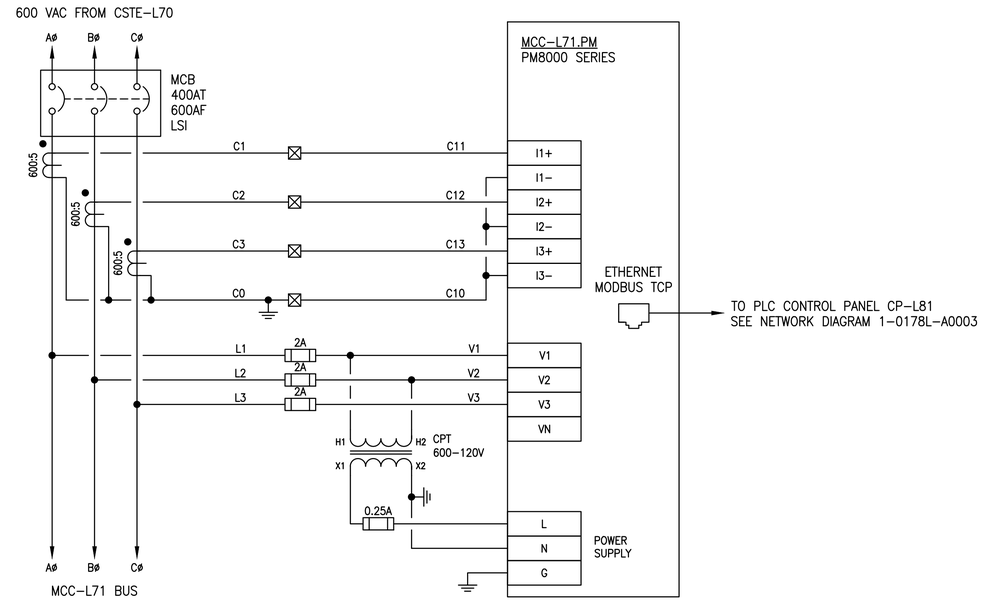

1 MCC-L71 600V POWER METER
SCALE: N.T.S.

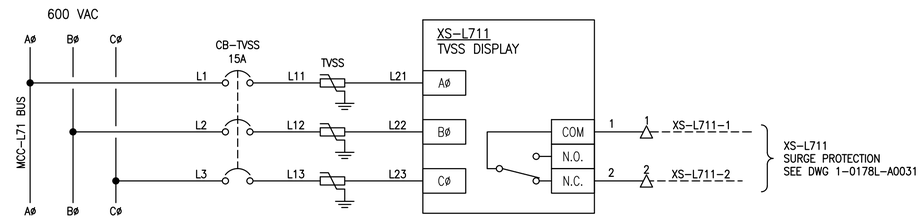

2 XS-L711 600V TRANSIENT VOLTAGE SURGE SUPPRESSOR
SCALE: N.T.S.

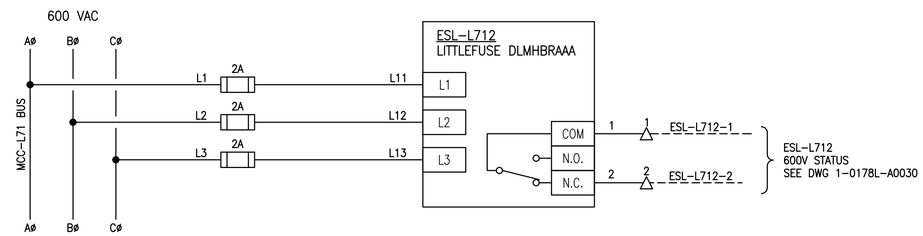

3 ESL-L712 600V POWER FAILURE RELAY
SCALE: N.T.S.

LAMACOID SCHEDULE

LEGEND	LAMACOID ENGRAVING
1	READY
2	RUNNING FWD.
3	RUNNING REV.
4	VFD FAULT
5	ATL O/L FAULT
6	MANUAL, OFF, AUTO
7	ATL MODE, VFD MODE
8	MANUAL START
9	MANUAL STOP
10	E–STOP
11	ATL O/L RESET
12	MANUAL SPEED CONTROL
13	MOTOR RUN TIME
14	MOTOR CURRENT

LEGEND:

- DEVICE TERMINAL
- FEED THROUGH TERMINAL BLOCK
- BLUE PILOT LIGHT
- GREEN PILOT LIGHT
- AMBER PILOT LIGHT
- 2–POSITION SWITCH
- 3–POSITION SWITCH
- 4–POSITION SWITCH
- SPEED POTENTIOMETER
- PUSH BUTTON
- EMERGENCY STOP BUTTON
- ELAPSED TIME METER
- AMMETER

DRAWING NUMBER	REFERENCE DRAWINGS
1-0178L-E0002	ELECTRICAL SINGLE LINE DIAGRAM

250 0 250 500mm
1 : 10

NOT FOR CONSTRUCTION

ISSUED FOR TENDER

ENGINEERS GEOSCIENTISTS MANITOBA
Certificate of Authorization
Dillon Consulting Limited (MB)
No. 1789 Date:

NO.	REVISIONS	DATE	DESIGN	CHECK
0	ISSUED FOR TENDER	2023/07/20	CAL	BLM

DILLON CONSULTING

DESIGNED BY: CAL	CHECKED BY: BLM
DRAWN BY: SK	APPROVED BY: BLM
SCALE: NTS	RELEASED FOR CONSTRUCTION BY:
DATE: MARCH 2023	DATE:
CONSULTANT NO.: 22–3229	

ENGINEER'S SEAL
PROVINCE OF MANITOBA
C.A. LANGE
Member
27791
2023/07/20
REGISTERED PROFESSIONAL ENGINEER

Winnipeg
THE CITY OF WINNIPEG
WATER AND WASTE DEPARTMENT

RIVERBEND LIFT PUMPING STATION
2023 UPGRADES
MCC ELEVATION AND DETAILS
MCC–L71

CITY DRAWING NUMBER	SHEET	REV.	SIZE
1–0178L–E0007	001	0	A1

223229–04–MCC LAYOUT–CON.dwg

LAST SAVE: 2023/07/20 - 3:21pm
PATH: C:\pw working directory\projects 2022\dillon_40zh\dms0722\223229-04-MCC LAYOUT-CON.dwg