A1 SIZE - 594mm x 847mm

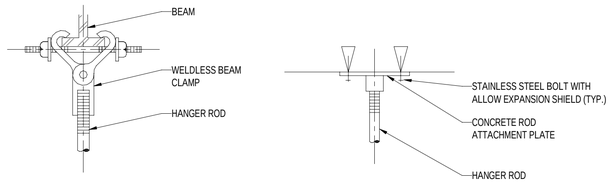

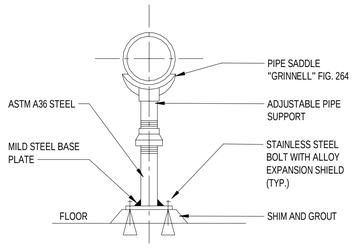

PIPE SUPPORT DETAIL

SCALE: NOT TO SCALE

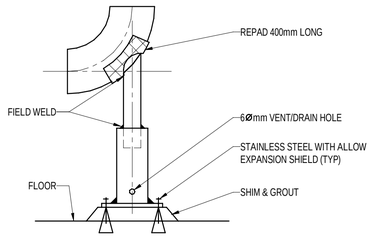

PIPE SUPPORT - ELBOW STANCHION

SCALE: NOT TO SCALE

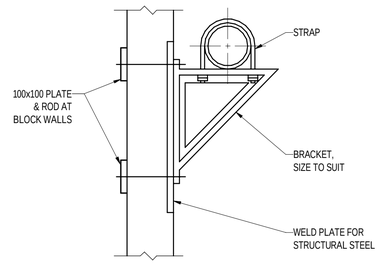

PIPE SUPPORT - ANGLE BRACKET PS-9

SCALE: NOT TO SCALE

PIPE HANGER CEILING ATTACHMENT DETAIL

SCALE: NOT TO SCALE

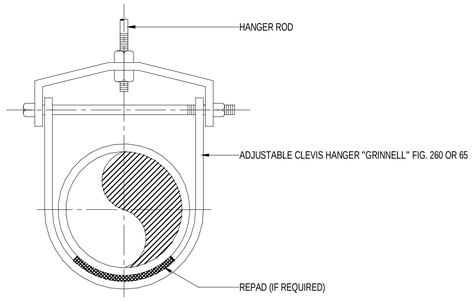

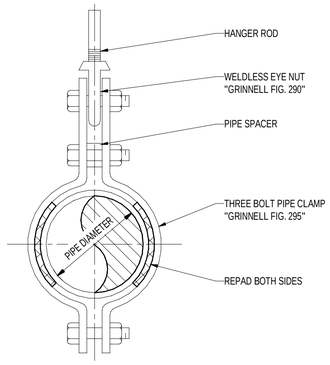

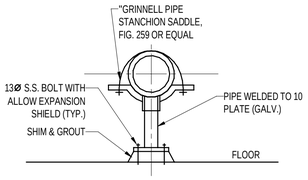

PIPE SUPPORT - STANCHION W/ CLAMP PS-6

SCALE: NOT TO SCALE

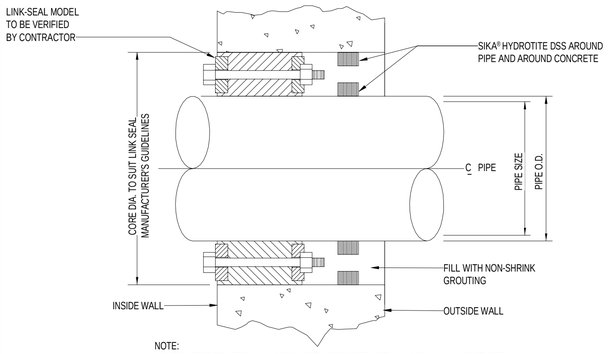

NOTE:
CONTRACTOR TO VERIFY ALL DESIGN REQUIREMENTS WITH LINK SEAL MANUFACTURER.

STEEL AND PLASTIC PIPE W/SAME OUTSIDE DIAMETER

PIPE SIZE (mm) (NOMINAL)	CORE DIA. (mm)(INS.)	LINK-SEAL SIZE	LINKS PER SEAL
75	127	LS-300-S-316	8
150	254	LS-475-S-316	9
200	304	LS-475-S-316	12
400	508	LS-575-S-316	18
600	711	LS-575-S-316	26

NOTE:
CONTRACTOR TO VERIFY INFORMATION WITH LINK-SEAL BEFORE ORDERING AND CORING.

LINK SEAL

SCALE: NOT TO SCALE

PIPE HANGER SCHEDULE

PIPE SIZE (Ø)	ROD SIZE (Ø)	MAXIMUM SPACING	MAXIMUM LOAD (kg)
THRU 25	9	2440	180
32 THRU 50	9	3050	180
63 THRU 89	13	3660	475
100 & 125	16	4875	650
150	19	4875	880
200 THRU 300	22	6100	1360
350 & 400	25	6100	1475
450 & 500	32	6100	2180
600 & 900	38	7620	2180

NOTE:

1. CONTRACTOR SHALL DETERMINE APPROPRIATE METHOD OF ATTACHMENT TO CEILING.
2. SCHEDULED DATA MAY ALSO BE USED FOR TRAPEZE HANGER SELECTION WITH EACH ROD NOT TO EXCEED MAXIMUM LOAD.
3. CONTRACTOR SHALL ENSURE THAT EACH LINE IS ADEQUATELY SUPPORTED BEFORE COMMENCING TRIAL OPERATION.

CLEVIS PIPE HANGER

SCALE: NOT TO SCALE

PIPE HANGER SCHEDULE - STEEL PIPE (STANDARD WEIGHT)

PIPE SIZE Ø (mm) (NOMINAL)	ROD SIZE (Ø)	MAXIMUM SPACING	MAXIMUM LOAD (kg)
UP TO 25	9	2440	180
32 THRU 50	9	3050	180
63 THRU 89	13	3660	475
100 & 125	16	4875	650
150	19	4875	880
200 THRU 300	22	6100	1360
350 & 400	25	6100	1475
450 & 500	32	6100	2180
600 & 900	38	7620	2180

NOTE:

1. CONTRACTOR SHALL DETERMINE APPROPRIATE METHOD OF ATTACHMENT TO CEILING.
2. SCHEDULED DATA MAY ALSO BE USED FOR TRAPEZE HANGER SELECTION WITH EACH ROD NOT TO EXCEED MAXIMUM LOAD.
3. CONTRACTOR SHALL ENSURE THAT EACH LINE IS SUPPORTED BEFORE COMMENCING TRIAL OPERATION.

PIPE HANGER - THREE BOLT (PS-4)

SCALE: NOT TO SCALE

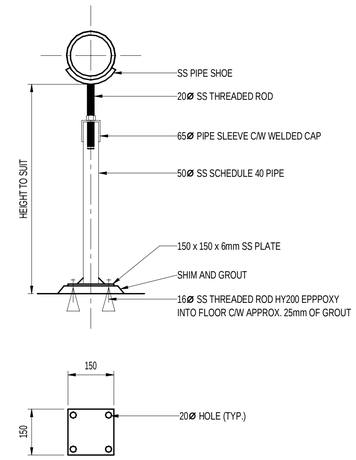

ADJUSTABLE PIPE STANCHION SUPPORT (PS-5B)

SCALE: NOT TO SCALE

DRAWING NUMBER	REFERENCE DRAWINGS
1-0178L-M0003	MECHANICAL PIPING PLAN AND LAYOUT DEMOLITION
1-0178L-M0007	MECHANICAL PIPING PLANS
1-0178L-M0008	MECHANICAL PIPING SECTIONS

NOT FOR CONSTRUCTION

ISSUED FOR TENDER

ENGINEERS GEOSCIENTISTS MANITOBA
Certificate of Authorization
Dillon Consulting Limited (MB)
No. 1789 Date: _____

NO.	REVISIONS	DATE	DESIGN	CHECK
0	ISSUED FOR TENDER	2023/07/20	CP	BLM

DILLON CONSULTING

DESIGNED BY: CP	CHECKED BY: BLM
DRAWN BY: SMZ	APPROVED BY: BLM
SCALE: As indicated	RELEASED FOR CONSTRUCTION BY:
DATE: MAR.2023	DATE:
CONSULTANT NO: 22-3229	

ENGINEER'S SEAL

PROVINCE OF MANITOBA
C.N. POGUE
Member
35962
07/20/23
REGISTERED PROFESSIONAL ENGINEER

Winnipeg
THE CITY OF WINNIPEG
WATER AND WASTE DEPARTMENT

RIVERBEND LIFT PUMPING STATION
2022 UPGRADES

MECHANICAL PIPING MISCELLANEOUS AND SEAL WATER PIPING DETAILS

CITY DRAWING NUMBER	SHEET	REV.	SIZE
1-0178L-M0009	001	0	A1

DILLON CONSULTING LIMITED 1558 WILLSON PLACE, WINNIPEG, MANITOBA, R3T 0Y4, PHONE (204) 453-2301, FAX (204) 452-4412

PLOT DATE: 2023-07-20 3:42:17 PM
FILE NAME: C:\pw working directory\projects 2022\dillon_40zhlldms03893\23229-10-WPMV-CON.rvt