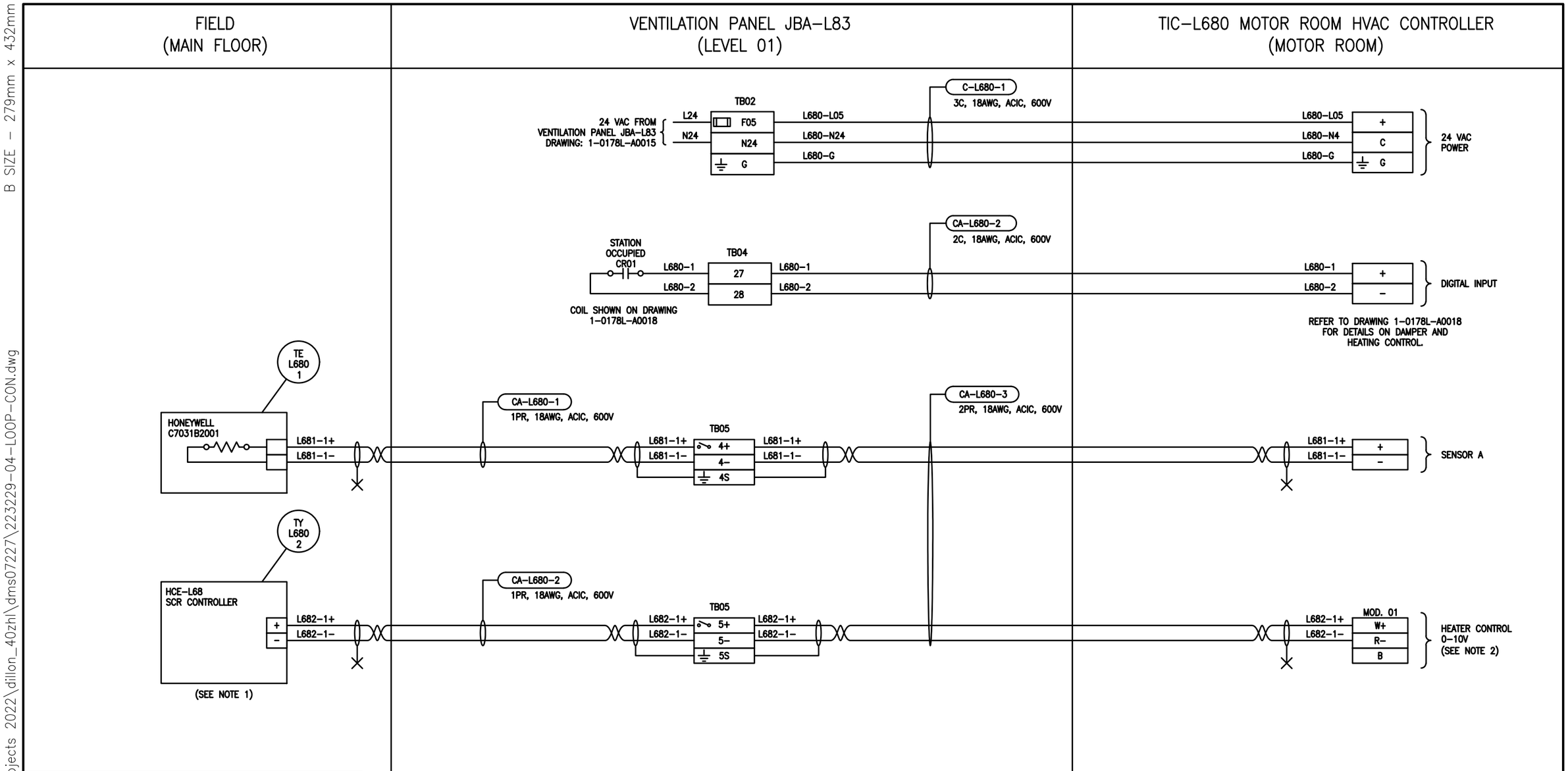

GENERAL NOTES:

1. DUCT HEATER HCE–L60 IS EQUIPPED WITH AN INTEGRAL AIR PROVING SWITCH (NOT SHOWN).
2. 0–10V CONTROL IS CONTINUOUSLY PID CONTROL WITH TEMPERATURE SETPOINT ADJUSTMENTS WHEN DIGITAL INPUT 1 IS ACTIVATED BY THE LIGHT SWITCH HS–L600 (STATION OCCUPANCY). REFER TO DRAWING 1–0178L–A0018 FOR DETAILS.

NOT FOR CONSTRUCTION

NO.	REVISIONS	DATE	DESIGN	CHECK
0	ISSUED FOR TENDER	2023/07/20	CAL	BLM

Dillon Consulting Limited
1558 Willson Place
Winnipeg, MB, Canada R3T 0Y4
204–453–2301

DESIGNED BY: CAL	CHECKED BY: BLM
DRAWN BY: SK	APPROVED BY: BLM
SCALE: NTS	DATE: MARCH 2023
ISSUED FOR CONSTRUCTION BY:	DATE:
CONSULTANT NO.: 22–3229	

ENGINEER'S SEAL

PROVINCE OF MANITOBA
C.A. LANGE
Member
37791
2023/07/20
REGISTERED PROFESSIONAL ENGINEER

Winnipeg

THE CITY OF WINNIPEG
WATER AND WASTE DEPARTMENT

RIVERBEND LIFT PUMPING STATION
2023 UPGRADES
LOOP DIAGRAM
HCE–L68 DUCT HEATER

CITY DRAWING NUMBER	SHEET	REV.	SIZE
1–0178L–A0021	001	0	B

B SIZE – 279mm x 432mm

LAST SAVE: 2023/07/20 – 3:23pm
PATH: C:\pw working directory\projects 2022\dillon_40zhl\dms07227\223229–04–LOOP–CON.dwg