A1 SIZE - 594mm x 841mm

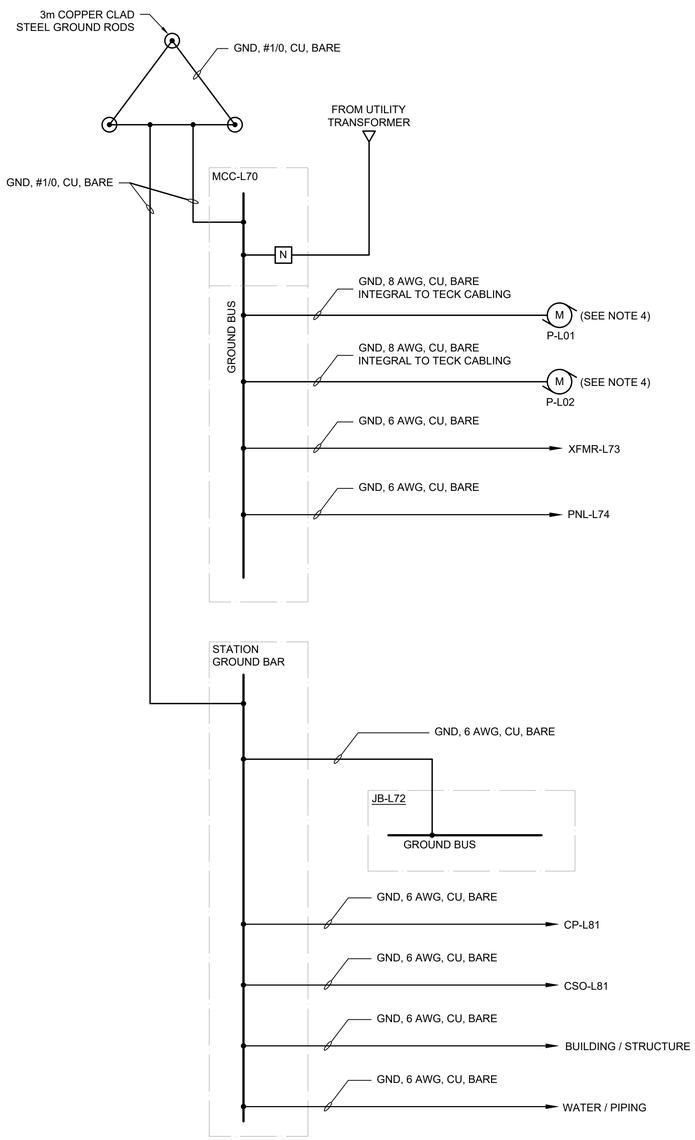

GROUNDING RISER DIAGRAM

SCALE: N.T.S.

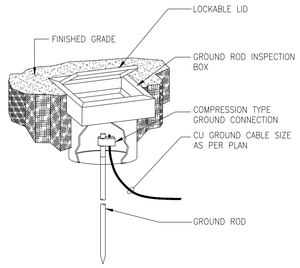

1 GROUND INSPECTION PIT DETAIL

SCALE: N.T.S.

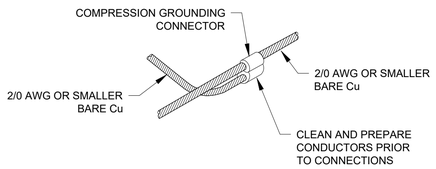

2 GROUND CONDUCTOR SPLICE

SCALE: N.T.S.

GENERAL NOTES:

1. THE GROUNDING RISER DIAGRAM REPRESENTS THE MINIMUM GROUNDING AND BONDING REQUIREMENTS. ADDITIONAL GROUNDING AND BONDING HARDWARE IS TO BE PROVIDED AS REQUIRED TO MEET CEC REQUIREMENTS.
2. ALL GROUNDING/BONDING WIRES AND COMPRESSION CONNECTORS SHOWN ON THIS DRAWING ARE NEW AND ARE TO BE PROVIDED AND INSTALLED BY THE CONTRACTOR.
3. PROVIDE GROUND INSPECTION PITS FOR EACH GROUND ROD AS SHOWN IN DETAIL 1.
4. INCLUDE GROUND CONNECTION TO DRIVE SHAFT AEGIS GROUNDING RING.

DRAWING NUMBER	REFERENCE DRAWINGS
1-0178L-E0002	ELECTRICAL SINGLE LINE DIAGRAM

NOT FOR CONSTRUCTION

ISSUED FOR TENDER

ENGINEERS GEOSCIENTISTS MANITOBA
Certificate of Authorization
Dillon Consulting Limited (MB)
No. 1789 Date:

NO.	REVISIONS	DATE	DESIGN	CHECK
0	ISSUED FOR TENDER	2023/07/20	CAL	BLM

DILLON CONSULTING

DESIGNED BY: CAL	CHECKED BY: BLM
DRAWN BY: SK	APPROVED BY: BLM
SCALE: NTS	RELEASED FOR CONSTRUCTION BY:
DATE: MARCH 2023	DATE:
CONSULTANT NO.: 22-3229	

ENGINEER'S SEAL

PROVINCE OF MANITOBA
C.A. LANGE
Member
37791
2023/07/20
REGISTERED PROFESSIONAL ENGINEER

Winnipeg
THE CITY OF WINNIPEG
WATER AND WASTE DEPARTMENT

RIVERBEND LIFT PUMPING STATION
2023 UPGRADES
GROUNDING INSTALLATION DETAILS

CITY DRAWING NUMBER	SHEET	REV.	SIZE
1-0178L-E0003	001	0	A1

223229-04-GROUNDING DETAIL.dwg

LAST SAVE: 2023/07/20 - 3:21pm
PATH: C:\pw working directory\projects 2022\dillon_40zn\dms07227\223229-04-GROUNDING DETAIL.dwg