A1 SIZE - 594mm x 841mm

GENERAL NOTES:

1. THESE NOTES ARE TO BE READ IN CONJUNCTION WITH THE PROJECT SPECIFICATIONS.
2. DO NOT SCALE DRAWINGS.
3. OBSERVE THE OWNER'S POLICIES AND STANDARDS REGARDING FIRE PREVENTION, SAFE WORK, SECURITY, ETC. AS WELL AS APPLICABLE STATUTORY ACTS, CODES AND REGULATIONS. PROVIDE ADEQUATE AND APPROPRIATE ACCESS TO WORK FOR WORKERS. PROVIDE ADEQUATE SAFETY BARRICADES AND OTHER PROTECTION AS REQUIRED FOR THE EXECUTION OF THIS WORK.
4. THE CONTRACTOR IS REQUIRED TO VERIFY ALL DIMENSIONS AND ELEVATIONS PRIOR TO PROCEEDING WITH CONSTRUCTION / ERECTION OF SYSTEMS OUTLINED IN THESE DRAWINGS AND ASSOCIATED SPECIFICATIONS.
5. WHERE THE CONTRACTOR'S INTERPRETATION SUGGESTS A CONFLICT BETWEEN THE PLANS, SPECIFICATION, AND THE ORIGINAL EQUIPMENT MANUFACTURER'S (OEM) RECOMMENDATIONS / REQUIREMENTS THE CONTRACTOR SHALL OBTAIN CLARIFICATION FROM THE OWNER BEFORE PROCEEDING WITH ANY WORK.
6. THE CONTRACTOR SHALL KEEP RECORDS OF ANY AS-BUILT DIFFERENCES BETWEEN THE INSTALLATION AND THESE DRAWINGS. THESE RECORDS SHALL BE SUBMITTED TO THE ENGINEERING COORDINATOR AT THE END OF THE JOB.
7. THIS DRAWING IS ISSUED IN CONJUNCTION WITH A COMPLETE SET OF PROJECT DRAWINGS AND IS NOT INTENDED TO BE READ OUT OF CONTEXT OF THE REMAINING DRAWINGS OF THAT SET. THE CONTRACTOR SHALL ENSURE THAT A COMPLETE SET OF DRAWINGS AT THE LATEST REVISION IS READILY AVAILABLE AND HAS BEEN REVIEWED BY SUPERVISING PERSONNEL AT THE ONSET OF CONSTRUCTION.
8. ALL MECHANICAL SYSTEMS AND EQUIPMENT SHALL BE INSTALLED USING THE RELEVANT CODES AND STANDARDS, AND WITH THE APPROVAL OF THE AUTHORITY HAVING JURISDICTION.

MECHANICAL:

1. MECHANICAL EQUIPMENT TO BE INSTALLED IN ACCORDANCE WITH ORIGINAL EQUIPMENT MANUFACTURER (OEM) REQUIREMENTS / RECOMMENDATIONS AND THE PROJECT SPECIFICATIONS.
2. MECHANICAL SYSTEMS TO BE INSTALLED IN ACCORDANCE WITH THE LATEST REVISION / ADDENDUM OF PROJECT SPECIFICATIONS AND DRAWINGS.
3. MECHANICAL DEVICES AND EQUIPMENT COMPONENTS SHOWN ON THE DRAWINGS ARE DRAWN REPRESENTATIVE OF THE COMPONENTS SPECIFIED OR PROCURED FOR THIS PROJECT. DIMENSIONS AND DETAILS SHOWN FOR COMPONENTS ARE FOR REFERENCE PURPOSES ONLY.
4. MATING CONNECTIONS ON ALL SYSTEMS EQUIPMENT SHALL BE FIELD VERIFIED TO CONFIRM COMPATIBILITY WITH PIPING INTERFACE. COORDINATE AND PROVIDE ALL DUCT AND PIPING TRANSITIONS REQUIRED FOR FINAL EQUIPMENT CONNECTIONS TO FURNISHED EQUIPMENT. FIELD VERIFY AND COORDINATE ALL DUCT AND PIPING DIMENSIONS BEFORE FABRICATION.
5. COORDINATE CONSTRUCTION OF MECHANICAL WORK WITH OTHER TRADES (ARCHITECTURAL, STRUCTURAL, ELECTRICAL), SHOWN ON OTHER CONTRACT DOCUMENT/ DRAWINGS. MECHANICAL CONTRACTOR SHALL BE RESPONSIBLE FOR LOCATIONS AND SIZES OF WALL AND FLOOR PENETRATIONS. COORDINATION SHALL BE DONE PRIOR TO THE FABRICATION OF DUCTWORK, CUTTING OF PIPING, OR FABRICATION OF STRUCTURAL MEMBERS.
6. WHEN MECHANICAL WORK (HVAC, SHEET METAL, ETC.) IS SUBCONTRACTED, IT SHALL BE THE MECHANICAL CONTRACTOR'S RESPONSIBILITY TO COORDINATE SUBCONTRACTORS AND THE ASSOCIATED CONTRACTS.
7. ALL OPENINGS/PENETRATIONS THROUGH FIRE RATED WALLS, CEILINGS, FLOORS, ETC., DUE TO DUCTWORK, PIPING, CONDUIT, ETC., SHALL BE FIRE-STOPPED WITH A PRODUCT LISTED BY ULC FOR THE SPECIFIC INSTALLATION CONDITION.
8. SIZES AND LOCATIONS OF ALL FLOOR AND WALL OPENINGS SHALL BE COORDINATED WITH ALL OTHER TRADES INVOLVED AS REQUIRED.
9. WHERE TWO OR MORE ITEMS OF TEH SAME TYPE OF EQUIPMENT ARE REQUIRED, THE PRODUCT OF ONLY ONE MANUFACTURER SHALL BE USED. ALL MATERIAL SHALL BE NEW AND BEST OF ITS RESPECTIVE KIND.
10. MAINTAIN A MINIMUM OF 2100mm CLEARANCE TO THE UNDERSIDE OF PIPES, DUCTS, CONDUITS, SUSPENDED EQUIPMENT, ETC. THROUGHOUT ACCESS ROUTES ACROSS THE BUILDING.
11. ALL EQUIPMENT, PIPING, DUCTWORK, ETC. SHALL NE SUPPORTED PER PROJECT SPECIFICATIONS, MANUFACTURER'S INSTRUCTIONS AND REQUIRED TO PROVIDE A VIBRATIO-FREE INSTALLATION.
12. ALL MISCELLANEOUS STEEL REQUIRED TO ENSURE PROPER INSTALLATION AND AS SHOWN IN DETAILS FOR PIPING AND EQUIPMENT (UNLESS OTHERWISE NOTED) SHALL BE FURNISHED AND INSTALLED BY THE CONTRACTOR.
13. SEAL ALL WALL OPENINGS FOR MECHANICAL EQUIPMENT WITH WEATHER RATED SEALANTS OR AS SPECIFIED IN THE PROJECT DOCUMENTS.
14. WALL MOUNTED THERMOSTATS SHALL BE INSTALLED AT ELEVATION OF 1320mm ABOVE FINISHED FLOOR UNLESS OTHERWISE NOTED ON THE DRAWINGS.
15. VOLUME CONTROL DAMPERS SHALL BE OPPOSED BLADE RIGHT ANGLE TYPE, BACKDRAFT AND OPEN-CLOSE SERVICE DAMPERS SHALL BE PARALLEL BLADE TYPE.
16. REFER TO HVAC DRAWING AND HVAC CONTROLS SPECIFICATION FOR HEATING AND VENTILATING SETTINGS, CONTROLS AND SEQUENCE OF OPERATIONS.
17. PROVIDE ADEQUATE SERVICE, REPAIR AND MAINTENANCE ACCESS FOR EQUIPMENT SUSPENDED FROM CEILING AND WALL MOUNTED.
18. ALL HVAC CONTROLS AND SYSTEMS TO BE SUPPLIED AND INSTALLED BY A QUALIFIED CONTROLS CONTRACTOR AND SHALL OPERATE AS PER SEQUENCE OF OPERATION NOTED IN THE CONTRACT DOCUMENTS. CONTRACTOR SHALL PROVIDE A COMPLETE WORKING SYSTEM TO THE SATISFACTION OF THE OWNER.
19. CONTRACTOR SHALL PROVIDE CONTROL SYSTEM AS-BUILT DRAWINGS AND COMPLETE OPERATIONAL AND TROUBLESHOOTING MANUALS FOR THE FINAL HVAC CONFIGURATION. COMMISSIONING AND OPERATOR TRAINING SHALL BE BY THE CONTROLS CONTRACTOR.
20. PIPE, VALVES, FITTINGS, SEALS AND GASKETS SHALL BE STORED, HANDLED AND INSTALLED IN ACCORDANCE WITH THE ORIGINAL EQUIPMENT MANUFACTURER REQUIREMENTS / RECOMMENDATIONS AND THE PROJECT SPECIFICATIONS.
21. PIPING FABRICATION, SUPPLY AND INSTALLATION TO BE IN ACCORDANCE WITH THE LATEST REVISION / ADDENDUM OF THE PROJECT SPECIFICATIONS.
22. PIPE AND FITTINGS TO BE PROVIDED IN ACCORDANCE WITH THE PIPING SPECIFICATIONS.
23. ALL VALVES SHALL BE INSTALLED SO AS TO AVOID PINCH POINTS AND OTHER SAFETY HAZARDS DURING ROUTINE OPERATION.
24. DOMESTIC WATER PIPING SHALL BE NON-DESTRUCTIVELY TESTED AS PER APPLICABLE CODE AND PROJECT SPECIFICATION REQUIREMENTS.
25. SPRING SUPPORTS SHALL BE PROVIDED WITH TEMPORARY SUPPLEMENTARY SUPPORTS DURING HYDROSTATIC TESTING.
26. PRESSURE REDUCING VALVE SHALL BE INSTALLED AT DOMESTIC WATER SUPPLY TO LIFT PUMPS SEAL LOCATION WITH SETTING SHOWN ON INSTALLATION DETAILS DRAWING.

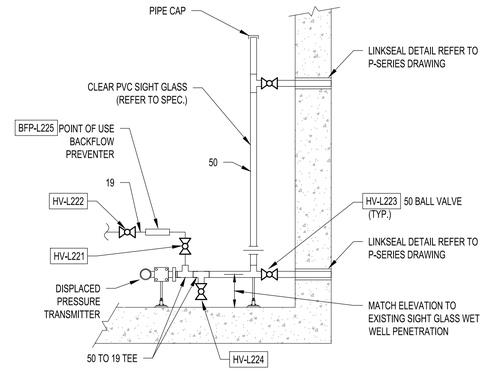

5 – WATER SUPPLY CONNECTION FOR SIGHT GLASS AND DP LEVEL MEASUREMENT SYSTEM
NTS

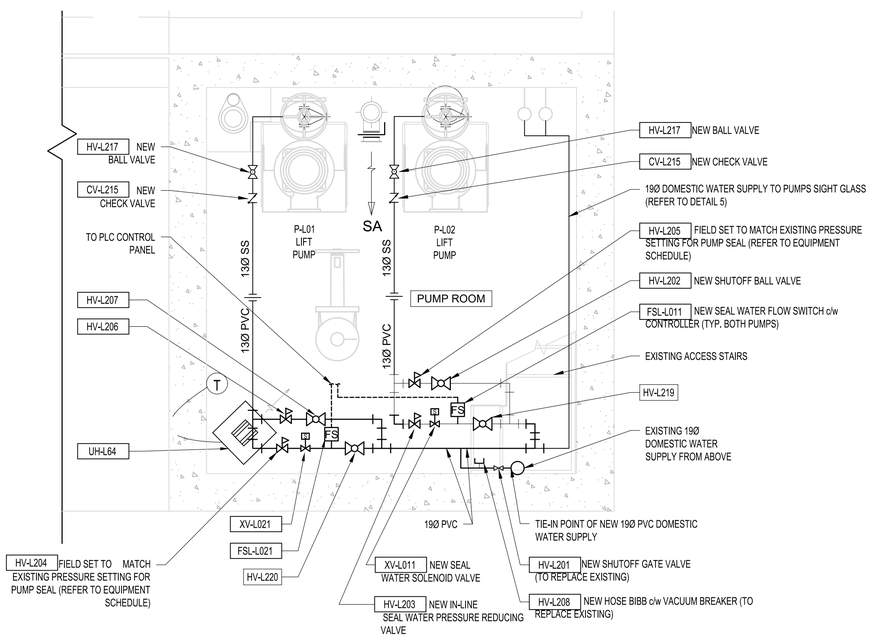

1 – PUMPS GLAND SEAL DETAIL
N.T.S

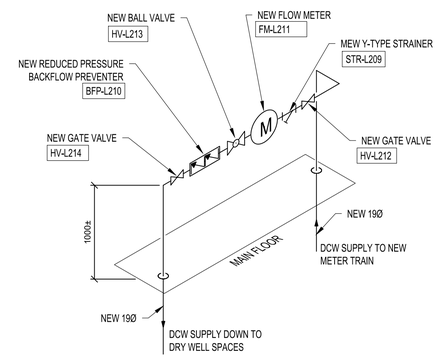

3 – DOMESTIC WATER METER TRAIN DETAIL
N.T.S.

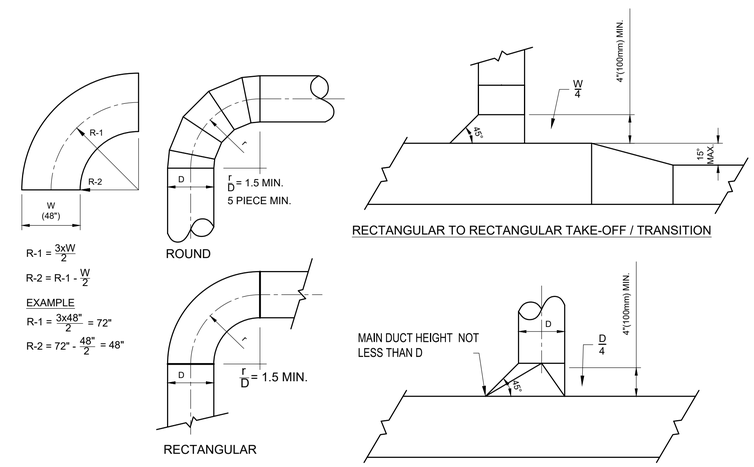

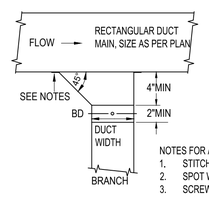

NOTES FOR ALL FITTINGS:
1. STITCH WELD ON 4" (100mm) CENTRES AND SEAL.
2. SPOT WELD ON 2" (50mm) CENTRES AND SEAL.
3. SCREW ON 4" (100mm) CENTRES AND SEAL.
4. TACK WELD ON 4" (100mm) CENTRES AND SEAL

2 – SIDE OF DUCT TAKE–OFF
N.T.S.

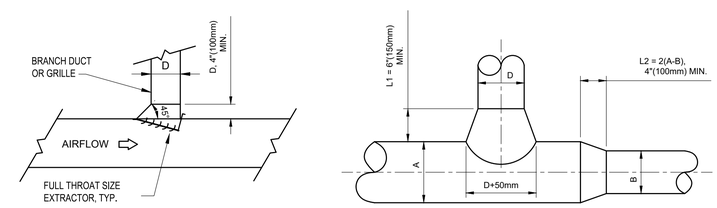

NOTES:
1. USE 3-PIECE CONSTRUCTION FOR 45° ROUND ELBOWS.
2. MITRE RECTANGULAR ELBOWS TO BE PROVIDED WITH TURNING VANES. REFER TO SPECIFICATIONS.
3. RECTANGULAR RADIUS ELBOWS r/D <1.5 TO BE PROVIDED WITH SINGLE THICKNESS SPLITTER VANES.

4 – TYPICAL DUCTWORK DETAILS
NTS

DRAWING NUMBER	REFERENCE DRAWINGS
1-0178L-P0001	PROCESS AND INSTRUMENTATION DIAGRAM HVAC SYSTEM FLOW
1-0178L-M0005	MECHANICAL PLAN LAYOUT AND SECTIONS HVAC AND PLUMBING
1-0178L-M0010	MECHANICAL EQUIPMENT SCHEDULES HVAC AND PLUMBING
1-0178L-M0011	MECHANICAL EQUIPMENT SCHEDULES HVAC AND PLUMBING

NOT FOR CONSTRUCTION

ISSUED FOR TENDER

ENGINEERS GEOSCIENTISTS MANITOBA
Certificate of Authorization
Dillon Consulting Limited (MB)
No. 1789 Date: 21.07.2023

NO.	REVISIONS	DATE	DESIGN	CHECK
0	ISSUED FOR TENDER	2023/07/20	SA	BLM

DILLON CONSULTING

DESIGNED BY: SA	CHECKED BY: BLM
DRAWN BY: HL	APPROVED BY: BLM
SCALE: NTS	RELEASED FOR CONSTRUCTION BY:
DATE: JUL. 2023	DATE:
CONSULTANT NO.: 22-3229	

ENGINEER'S SEAL
PROVINCE OF MANITOBA
N. AFANASEV
Member
32647
REGISTERED PROFESSIONAL ENGINEER
21.07.2023
Rev. 0

THE CITY OF WINNIPEG
WATER AND WASTE DEPARTMENT

RIVERBEND LIFT PUMPING STATION
2023 UPGRADES
MECHANICAL DETAILS AND GENERAL NOTES

CITY DRAWING NUMBER	SHEET	REV.	SIZE
1-0178L-M0006	001	0	A1

223229–10–P&ID–CON_PD2.dwg

DILLON CONSULTING LIMITED 1558 WILLSON PLACE, WINNIPEG, MANITOBA, R3T 0Y4, PHONE (204) 453-2301, FAX (204) 452-4412

LAST SAVE: 2023/07/20 - 2:44pm
PATH: C:\pw working directory\projects 2022\dillon_40zn\dms07228\223229-10-P&ID-CON_PD2.dwg