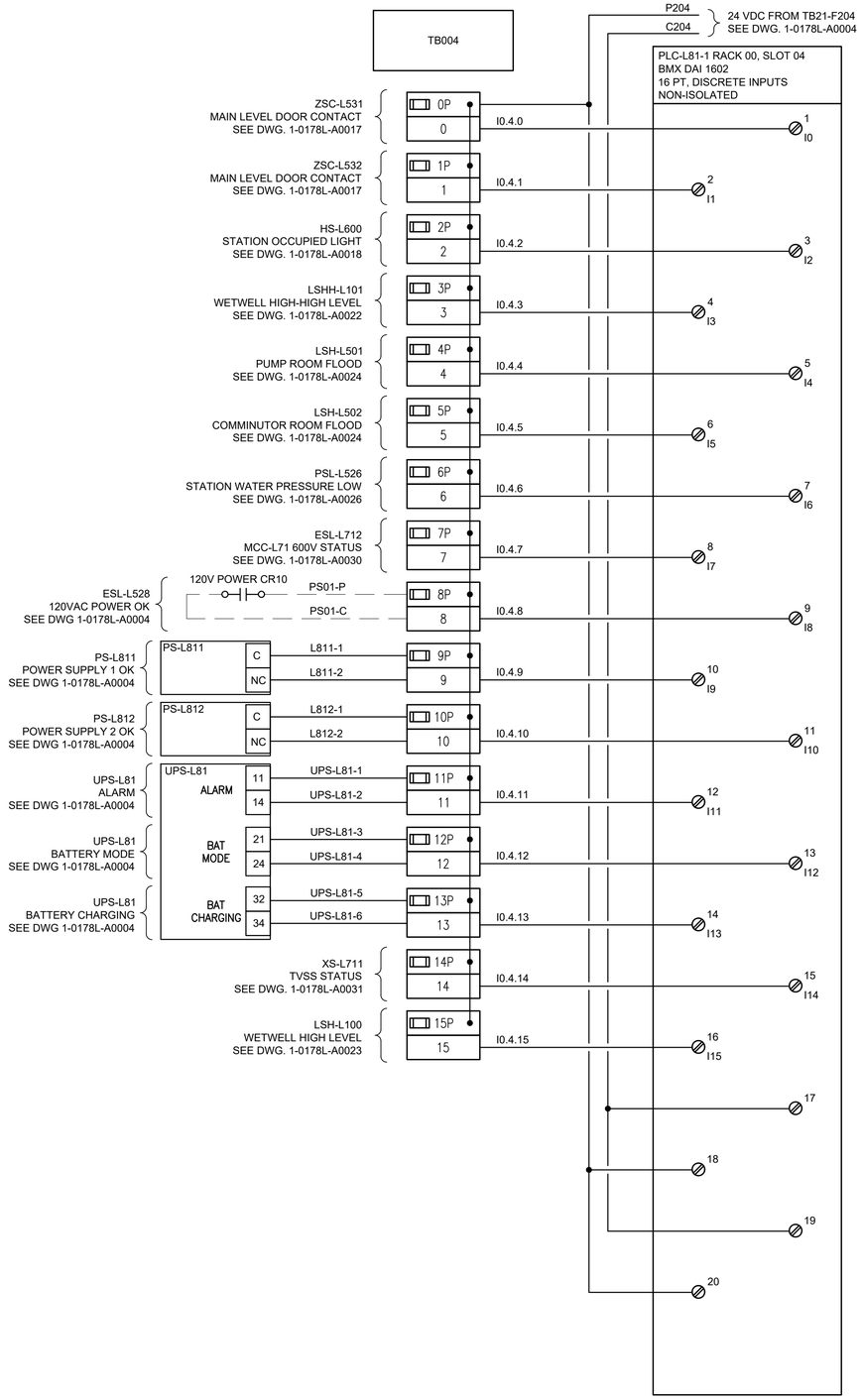

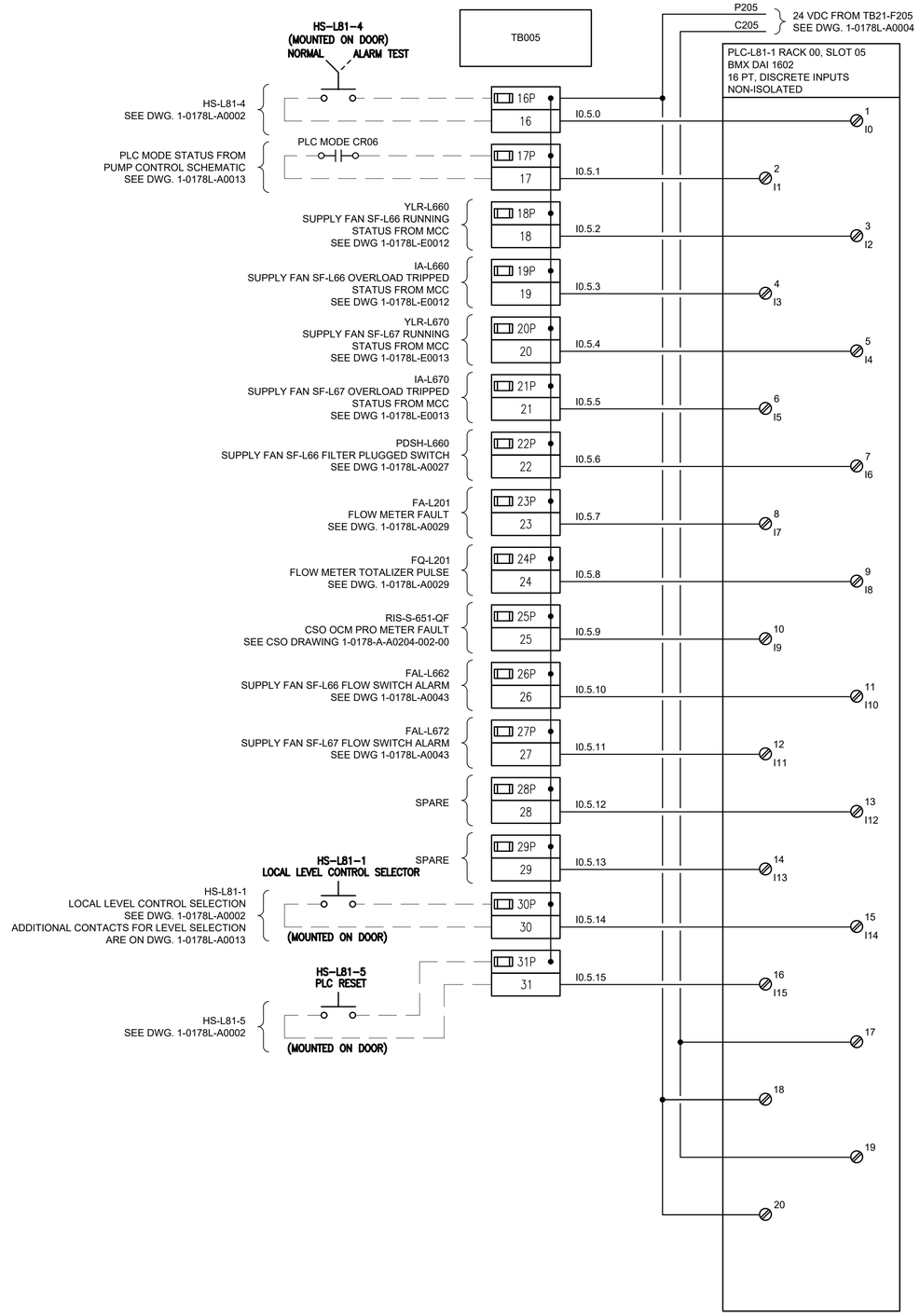

FUSE SCHEDULE		
TB	IDENTIFIER	RATED CURRENT (A) FA
TB004	0P	0.1
	1P	0.1
	2P	0.1
	3P	0.1
	4P	0.1
	5P	0.1
	6P	0.1
	7P	0.1
	8P	0.1
	9P	0.1
	10P	0.1
	11P	0.1
	12P	0.1
	13P	0.1
	14P	0.1
	15P	0.1
TB005	16P	0.1
	17P	0.1
	18P	0.1
	19P	0.1
	20P	0.1
	21P	0.1
	22P	0.1
	23P	0.1
	24P	0.1
	25P	0.1
	26P	0.1
	27P	0.1
	28P	0.1
	29P	0.1
	30P	0.1
	31P	0.1

DRAWING NUMBER	REFERENCE DRAWINGS
1-0178L-A0004	POWER DISTRIBUTION SCHEMATIC CONTROL PANEL CP-L81
1-0178L-A0002	PANEL LAYOUT & BILL OF MATERIAL CONTROL PANEL CP-L81

NOT FOR CONSTRUCTION

ISSUED FOR TENDER

ENGINEERS GEOSCIENTISTS MANITOBA
Certificate of Authorization
Dillon Consulting Limited (MB)
No. 1789 Date:_____

NO.	REVISIONS	DATE	DESIGN	CHECK
0	ISSUED FOR TENDER	2023/07/20	CAL	BLM

DILLON CONSULTING

DESIGNED BY: CAL	CHECKED BY: BLM
DRAWN BY: SK	APPROVED BY: BLM
SCALE: NTS	RELEASED FOR CONSTRUCTION BY:
DATE: MARCH 2023	DATE:
CONSULTANT NO.: 22-3229	

ENGINEER'S SEAL
PROVINCE OF MANITOBA
C.A. LANGE
Member
37791
2023/07/20
REGISTERED PROFESSIONAL ENGINEER

Winnipeg
THE CITY OF WINNIPEG
WATER AND WASTE DEPARTMENT

RIVERBEND LIFT PUMPING STATION
2023 UPGRADES
PLC I/O WIRING DIAGRAM
CONTROL PANEL CP-L81
DISCRETE INPUTS RACK 00, SLOT 04 & 05

CITY DRAWING NUMBER	SHEET	REV.	SIZE
1-0178L-A0005	001	0	A1

223229-04-PLC IO-CON.dwg

A1 SIZE - 594mm x 841mm

LAST SAVE: 2023/07/20 - 3:22pm
PATH: C:\pw working directory\projects 2022\dillon_40zh\dms0727\223229-04-PLC IO-CON.dwg