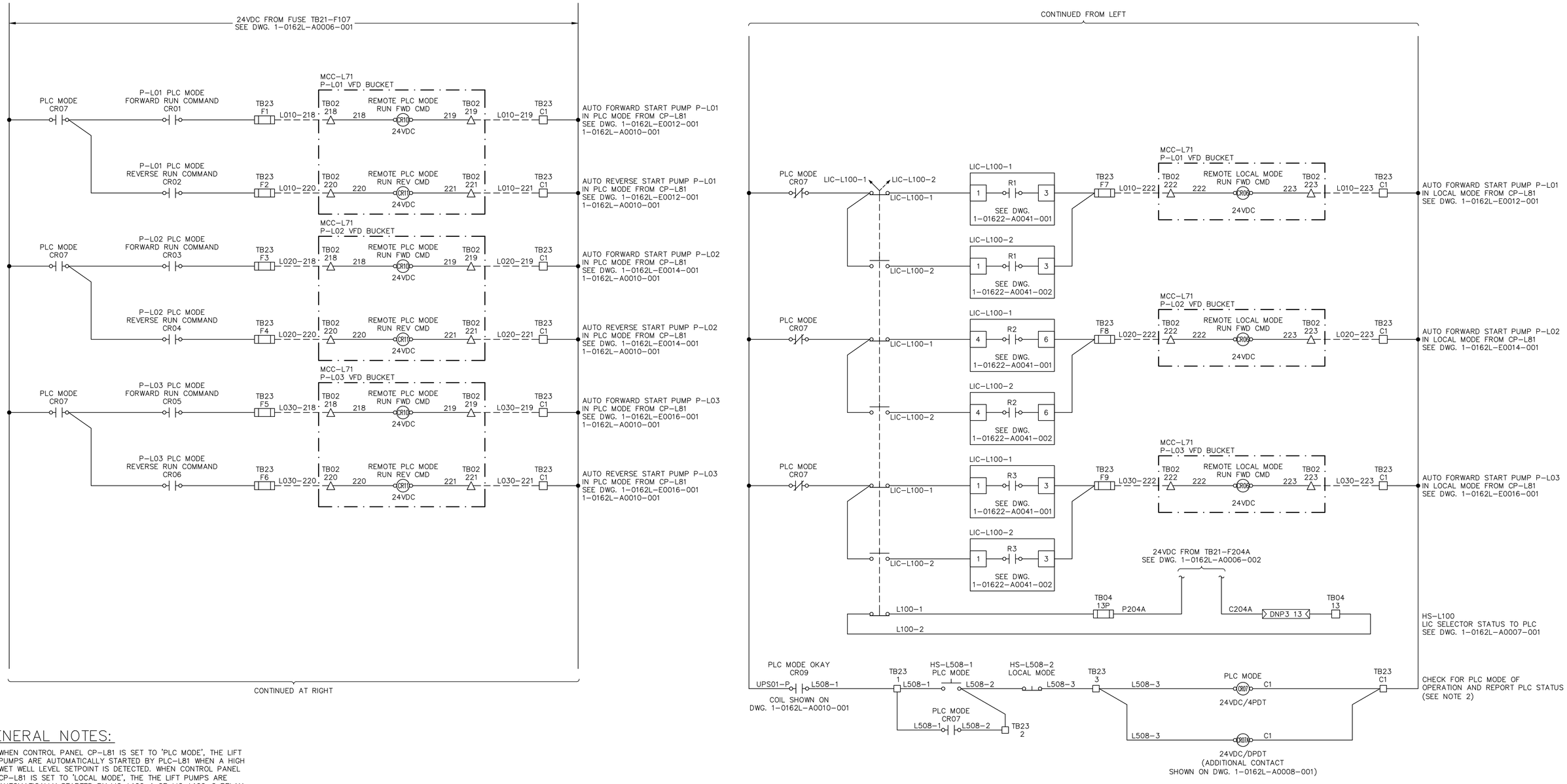

GENERAL NOTES:

1. WHEN CONTROL PANEL CP–L81 IS SET TO 'PLC MODE', THE LIFT PUMPS ARE AUTOMATICALLY STARTED BY PLC–L81 WHEN A HIGH WET WELL LEVEL SETPOINT IS DETECTED. WHEN CONTROL PANEL CP–L81 IS SET TO 'LOCAL MODE', THE THE LIFT PUMPS ARE AUTOMATICALLY STARTED BY LIC–L100–1 OR LIC–L100–2 RELAY CONTACTS WHEN A HIGH WET WELL LEVEL SETPOINT IS DETECTED.

2. IF THE PLC FAILS, THE SYSTEM WILL AUTOMATICALLY TRANSFER TO 'LOCAL MODE'. THE ONLY METHOD OF RETURNING THE SYSTEM INTO 'PLC MODE' IS BY MANUALLY PUSHING THE PLC MODE PUSH BUTTON ON CP–L81 DOOR.

NO.	DRAWING NUMBER	REFERENCE DRAWING TITLE
10	–	–
9	–	–
8	–	–
7	–	–
6	–	–
5	–	–
4	–	–
3	–	–
2	1–0162L–A0006–001	AUTOMATION POWER DISTRIBUTION SCHEMATIC PLC CONTROL PANEL CP–L81
1	1–0162L–A0004–001	AUTOMATION PANEL LAYOUT & BILL OF MATERIALS PLC CONTROL PANEL CP–L81

REFERENCE DRAWINGS

ENGINEERS GEOSCIENTISTS MANITOBA
Certificate of Authorization
KGS Group
No. 245

B.M.
ELEV.

NO.	REVISIONS	DATE (YYYY-MM-DD)	BY
0	ISSUED FOR CONSTRUCTION	2023 03 24	DDW

KGS GROUP

DESIGNED BY: A. NIRMAL
CHECKED BY: DDW
DRAWN BY: R. GASPAR
APPROVED BY: DDW
SCALE: HORIZONTAL NTS, VERTICAL NTS
RELEASED FOR CONSTRUCTION
DATE: 2022/11/09
DATE
PLOT DATE: 2023 03 23

ENGINEER'S SEAL
PROVINCE OF MANITOBA
D.D. WILSON
Member
22552
2023-03-23
REGISTERED PROFESSIONAL ENGINEER

CONSULTANT DRAWING NUMBER
22–0107–004–A17.01

BID OPPORTUNITY: 864-2022

Winnipeg

THE CITY OF WINNIPEG
WATER AND WASTE DEPARTMENT
ENGINEERING DIVISION

METCALFE LIFT PUMPING STATION
2022 UPGRADES
CONTROL SCHEMATIC

PLC CONTROL PANEL CP–L81
PLC MODE & LOCAL MODE PUMP CONTROLS

CITY DRAWING NUMBER: 1–0162L–A0017–001
SHEET 22 OF 109

FILE PATH: P:\Projects\2022\22-0107-004\Dwg\Elec\
FILE NAME: 1-0162L-A0017-001.dwg