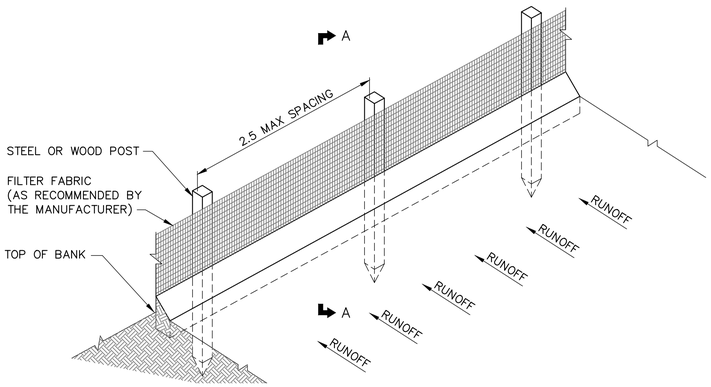

SILT FENCE DETAIL
SCALE: N.T.S.

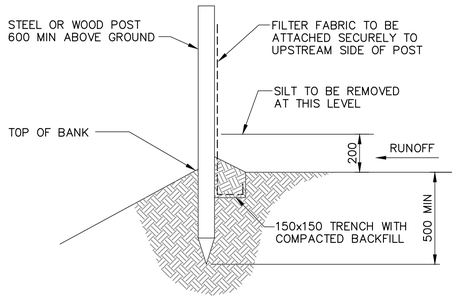

SECTION A – A
SCALE: N.T.S.

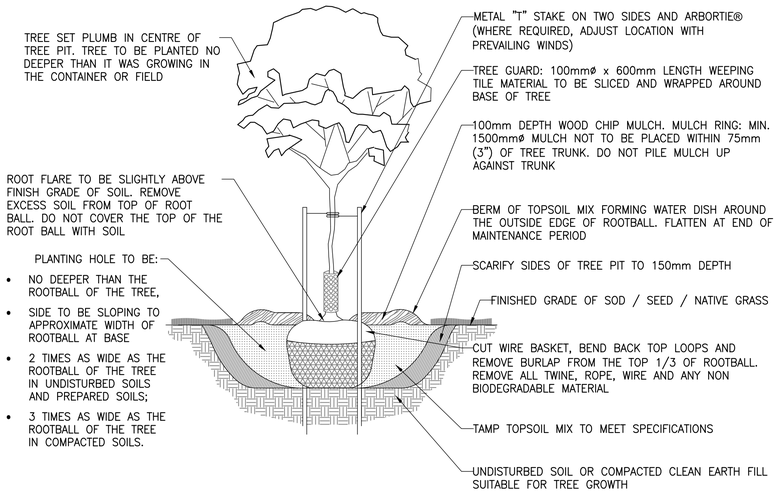

TYPICAL DECIDUOUS TREE PLANTING DETAIL
SCALE: N.T.S.

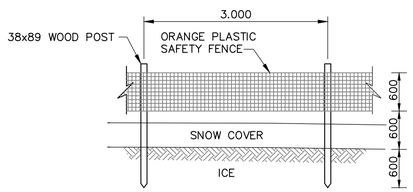

SAFETY FENCE DETAIL
SCALE: N.T.S.

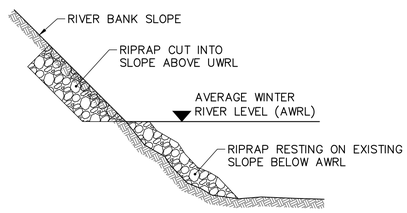

RIPRAP DETAIL
SCALE: N.T.S.

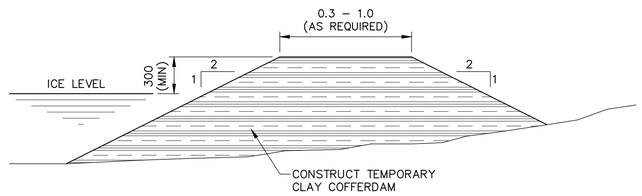

COFFERDAM DETAIL
SCALE: N.T.S.

FOR INDEX PAGE SEE
DWG 1–03030–D0013–001

ENGINEERS
GEOSCIENTISTS
MANITOBA
Certificate of Authorization
KGS Group
No. 245

METRIC
WHOLE NUMBERS INDICATE MILLIMETRES
DECIMALIZED NUMBERS INDICATE METRES

WARNING

IF POWER EQUIPMENT OR EXPLOSIVES ARE TO BE USED FOR EXCAVATION ON THIS PROJECT THE CONTRACTOR MUST:

1) NOTIFY THE GAS COMPANY OF THE PROPOSED LOCATION OF EXCAVATION.

2) TAKE PRECAUTION TO AVOID DAMAGE TO GAS COMPANY INSTALLATIONS.

SEE PROVINCIAL REGULATION 210/72 FOR DETAILS

LOCATION APPROVED
UNDERGROUND STRUCTURES

SUPV. U/G STRUCTURES COMMITTEE — DATE

NOTE:

LOCATION OF UNDERGROUND STRUCTURES AS SHOWN ARE BASED ON THE BEST INFORMATION AVAILABLE BUT NO GUARANTEE IS GIVEN THAT ALL EXISTING UTILITIES ARE SHOWN OR THAT THE GIVEN LOCATIONS ARE EXACT. CONFIRMATION OF EXISTENCE AND EXACT LOCATION OF ALL SERVICES MUST BE OBTAINED FROM THE INDIVIDUAL UTILITIES BEFORE PROCEEDING WITH CONSTRUCTION.

B.M.
ELEV.

NO.	REVISIONS	DATE	BY
0	ISSUED FOR TENDER	2022 12 02	RBO

KGS GROUP

DESIGNED BY	NGV	CHECKED BY	RBO
DRAWN BY	GEL	APPROVED BY	
SCALE: HORIZONTAL	AS NOTED	RELEASED FOR CONSTRUCTION	
VERTICAL	NA		
DATE	2022 12 02	DATE	

PLOT DATE: 2022 12 02

ENGINEER'S SEAL
PROVINCE OF MANITOBA
2022-12-02
R. B. OFFMAN
Member
22701
REGISTERED PROFESSIONAL ENGINEER

CONSULTANT DRAWING NUMBER
1–03030–C0075–001

BID OPPORTUNITY: 910–2022

FILE PATH: P:\Projects\2022\22-0107-013\Dwg\Mun\

Winnipeg

THE CITY OF WINNIPEG
WATER AND WASTE DEPARTMENT
ENGINEERING DIVISION

2022 OUTFALL PROGRAM

MISCELLANEOUS DETAILS
SHEET 1

SHEET 11 OF 12

CITY DRAWING NUMBER
1–03030–C0075–001