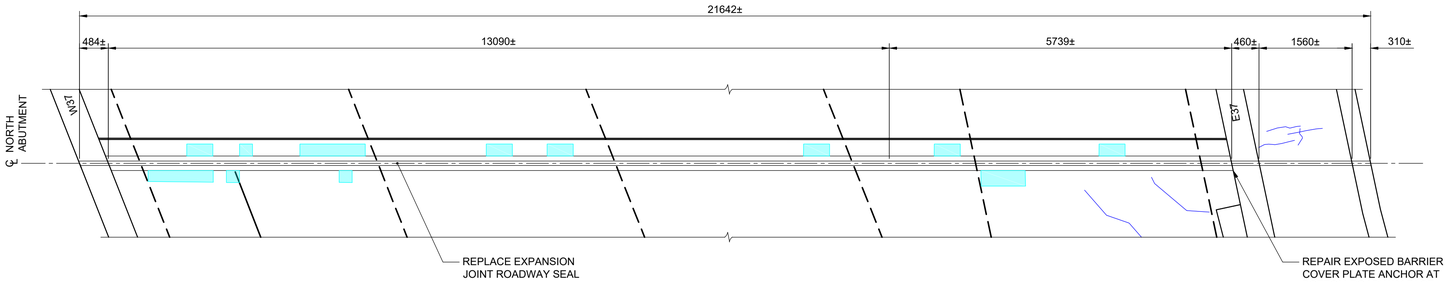

PLAN VIEW

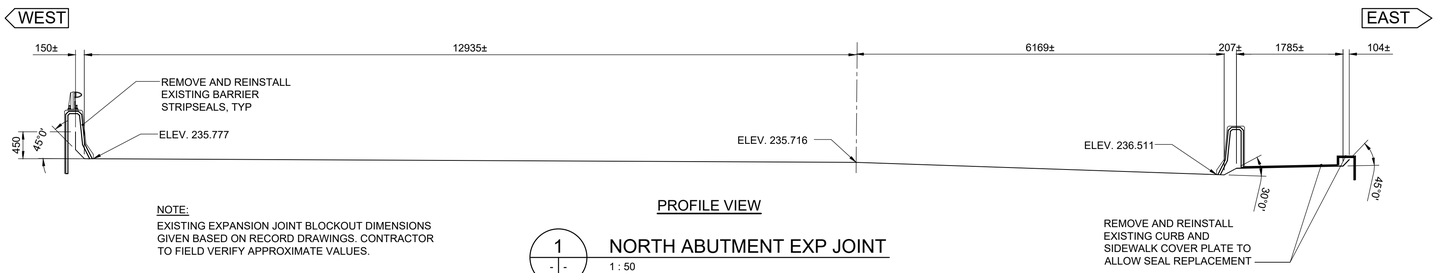

PROFILE VIEW

NOTE:
EXISTING EXPANSION JOINT BLOCKOUT DIMENSIONS GIVEN BASED ON RECORD DRAWINGS. CONTRACTOR TO FIELD VERIFY APPROXIMATE VALUES.

1 NORTH ABUTMENT EXP JOINT

1 : 50

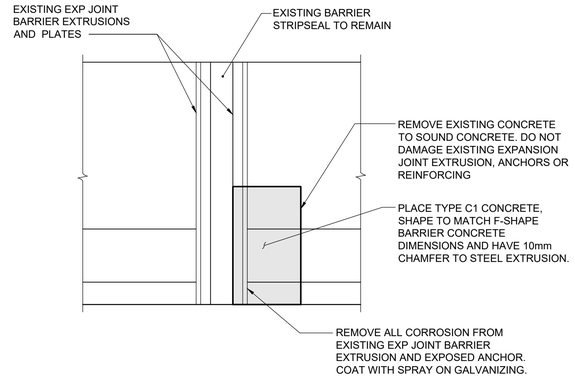

2 BARRIER CONCRETE REPAIR AT NORTH ABUTMENT EXP JOINT

1 : 10

- CONCRETE BARRIER REPAIR IN ACCORDANCE WITH BARRIER TYPE 1B REPAIRS. REFER TO SHEET 13 FOR DETAILS.

FIGURE 1: NORTHBOUND EAST LANE NORTH ABUTMENT BARRIER PLATE REPAIR

LEGEND

- APPROXIMATE LINE LANE
- CRACK
- EXPANSION BLOCKOUT REPAIR AREAS

TABLE 1: EXPANSION BLOCKOUT REPAIR QUANTITIES

LOCATION	APPROX REPAIR AREA
KENASTON SOUTH ABUTMENT	1.942 m^2
PIER 2	0.821 m^2
PIER 5	0.725 m^2
ACADEMY SOUTH ABUTMENT	0.782 m^2
PIER 8	0.592 m^2
PIER 11	0.000 m^2
PIER 6/12	3.165 m^2
PIER 13	3.075 m^2
PIER 17	3.759 m^2
PIER 18	2.471 m^2
NORTH ABUTMENT	1.186 m^2

TABLE 2: STRIPSEAL LENGTH

LOCATION	APPROX LENGTH
KENASTON SOUTH ABUTMENT	10.300 m
PIER 2	10.310 m
PIER 5	10.355 m
ACADEMY SOUTH ABUTMENT	9.025 m
PIER 8	9.035 m
PIER 11	8.760 m
PIER 6/12	17.500 m
PIER 13	15.250 m
PIER 17	17.885 m
PIER 18	19.950 m
NORTH ABUTMENT	21.800 m

TABLE 3: EXTRUSION REPAIR LENGTH

LOCATION	APPROX LENGTH (m)
KENASTON SOUTH ABUTMENT	0.600 m
PIER 2	1.250 m
ACADEMY SOUTH ABUTMENT	0.600 m
PIER 8	0.850 m
PIER 6/12	0.750 m
PIER 13	0.500 m
PIER 17	0.500 m

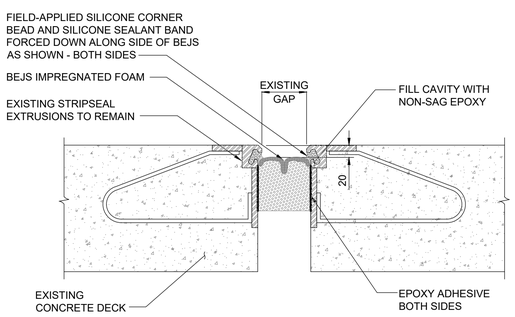

3 SEAL REPLACEMENT DETAIL

1 : 5

- REMOVE EXISTING SE-400 STRIPSEAL. SUPPLY AND INSTALL BEJS-0400 SEAL

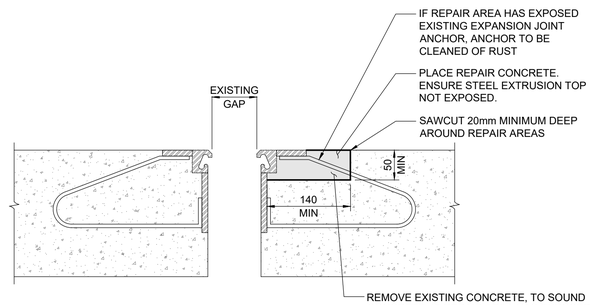

4 EXPANSION BLOCKOUT REPAIR DETAIL

1 : 5

REPAIR AREA IS AN EXAMPLE. METHODOLOGY SHALL BE SIMILAR FOR REPAIRS ON OTHER SIDE OF BLOCKOUT IF NECESSARY. SEAL NOT SHOWN FOR CLARITY.

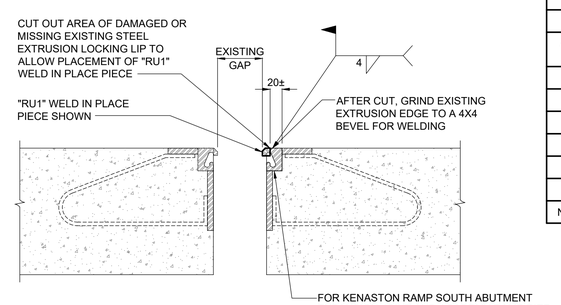

5 DAMAGED ROADWAY EXTRUSION REPAIR DETAIL

1 : 5

REPAIR AREA IS AN EXAMPLE. METHODOLOGY SHALL BE SIMILAR FOR REPAIRS ON OTHER SIDE OF BLOCKOUT IF NECESSARY. SEAL NOT SHOWN FOR CLARITY.

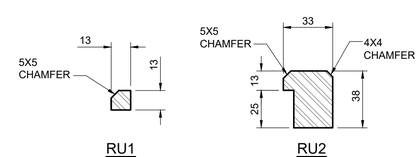

6 "RU1" & "RU2" WELD IN PLACE PIECE DETAIL

1 : 2

EXPANSION JOINT REPAIR NOTES:

1. IMMEDIATELY PRIOR TO PLACEMENT OF CONCRETE, ALL METAL SURFACES WHICH WILL BE IN CONTACT SHALL BE COATED WITH EPOXY ADHESIVE. RATE OF PLACEMENT OF ADHESIVE SHALL BE SUCH THAT THE ADHESIVE DOES NOT DRY OR SET BEFORE CONCRETE IS PLACED.
2. ALL EXISTING CONCRETE TO BE CLEANED OF DUST, DEBRIS AND CONTAINMENTS PRIOR TO PLACEMENT OF CONCRETE.
3. IF REPAIR AREA EXPOSES EXISTING REINFORCING, EXISTING REINFORCING TO BE SAND BLASTED AND EPOXY COATED
4. CARE SHALL BE TAKEN DURING CONSOLIDATION OF CONCRETE TO ENSURE THERE ARE NO VOIDS IN THE CONCRETE AND AROUND EXPANSION JOINT COMPONENTS. FOLLOWING CONCRETING OPERATIONS THE ENGINEER SHALL INSPECT THE REPAIR AREA BY METHOD OF SOUNDING. ALL VOIDS SHALL BE FILLED WITH AN APPROVED NON-SHRINK GROUT.
5. CARE SHALL BE TAKEN IN REMOVING EXISTING BARRIER SEALS TO ALLOW REINSTALL OF EXISTING SEAL.
6. ALL SURFACES IN CONTACT WITH JOINT SEALS SHALL BE CLEANED PRIOR TO INSTALLATION OF SEALS.

TEMPERATURE WIDTH ADJUSTMENT TABLE

LOCATION	TEMP.	40°C	35°C	30°C	25°C	20°C	15°C	10°C	5°C	0°C	-5°C	-10°C	-15°C	-20°C	-25°C	-30°C	-35°C	-40°C
KENASTON SOUTH ABUTMENT	"A"	69	70	71	73	74	75	77	78	79	81	82	83	85	86	87	89	90
KENASTON PIER 2	"A"	56	59	63	67	71	75	79	83	86	90	94	97	101	105	108	112	116
KENASTON PIER 5	"A"	60	63	66	69	72	75	78	81	84	87	90	93	96	99	102	105	108
ACADEMY SOUTH ABUTMENT	"A"	69	70	71	73	74	75	77	78	79	81	82	83	85	86	87	89	90
ACADEMY PIER 8	"A"	56	59	63	67	71	75	79	83	86	90	94	97	101	105	108	112	116
ACADEMY PIER 11	"A"	60	63	66	69	72	75	78	81	84	87	90	93	96	99	102	105	108
PIER 6/12	"A"	65	67	69	71	73	75	77	79	81	83	85	87	89	91	93	95	97
PIER 13	"A"	51	56	61	65	70	75	79	84	89	93	98	103	107	112	117	121	126
PIER 17	"A"	51	56	61	65	70	75	79	84	89	93	98	103	107	112	117	121	126
PIER 18	"A"	60	63	65	67	71	75	77	80	82	85	87	90	93	95	98	101	103
NORTH ABUTMENT	"A"	75	75	75	75	75	75	75	75	75	75	75	75	75	75	75	75	75

NOTES:

1. TEMPERATURE WIDTH ADJUSTMENT TABLE AND TOP OF FINISHED CONCRETE ELEVATIONS GIVEN FROM 1987 AND 2007 RECORD DRAWINGS. GIVEN FOR MOVEMENT PURPOSES ONLY.
2. CONTRACTOR TO RECORD EXISTING GAP AND INSTALLATION TEMPERATURE AT TIME OF SEAL INSTALLATION..
3. INSTALLATION TEMPERATURE SHALL BE TAKEN AS THE MEAN SHADE AIR TEMPERATURE UNDER THE BRIDGE.

ENGINEERS GEOSCIENTISTS MANITOBA
Certificate of Authorization
Tetra Tech Canada Inc.
No. 6499

B.M.
ELEV.

NO.	REVISIONS	DATE	BY
0	ISSUED FOR TENDER	23.03.07	E.F.S.

TETRA TECH

DESIGNED BY	R.L.	CHECKED BY	E.F.S.
DRAWN BY	E.V.	APPROVED BY	E.F.S
HOR. SCALE: VERTICAL:	AS NOTED	ACCEPTED BY / DATE	ORIGINAL SIGNED 23.03.07
DATE	22.12.06	V. BANTHIA, M. SC. P.ENG., CM. PMP BRIDGE PROJECTS ENGINEER	

ORIGINAL DRAWING REVISION "00" SEALED BY E.F.G. SHEHATA 23.03.07

CONSULTANT DRAWING NO.
734-2200070500-DWG-S1119

Winnipeg
THE CITY OF WINNIPEG
PUBLIC WORKS DEPARTMENT
ENGINEERING DIVISION

MINOR REHABILITATION OF ST JAMES BRIDGES
NORTHBOUND BRIDGE

CITY DRAWING NUMBER B102-22-019
SHEET 17 OF 18

NORTH ABUTMENT AND TYPICAL EXPANSION JOINT REPAIR DETAILS

17