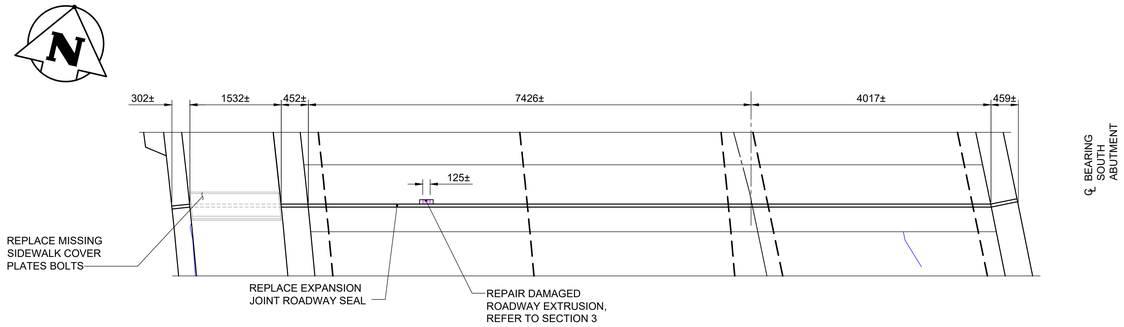

PLAN VIEW

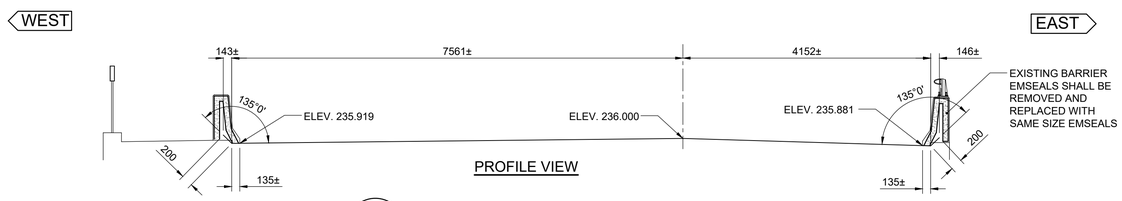

PROFILE VIEW

1 - - SOUTH ABUTMENT EXP JOINT

1 : 50

NOTE:
EXISTING EXPANSION JOINT BLOCKOUT DIMENSIONS GIVEN BASED ON RECORD DRAWINGS. CONTRACTOR TO FIELD VERIFY APPROXIMATE VALUES.

EXPANSION JOINT REPAIR NOTES:

1. IMMEDIATELY PRIOR TO PLACEMENT OF CONCRETE, ALL METAL SURFACES WHICH WILL BE IN CONTACT SHALL BE COATED WITH EPOXY ADHESIVE. RATE OF PLACEMENT OF ADHESIVE SHALL BE SUCH THAT THE ADHESIVE DOES NOT DRY OR SET BEFORE CONCRETE IS PLACED.
2. ALL EXISTING CONCRETE TO BE CLEANED OF DUST, DEBRIS AND CONTAINMENTS PRIOR TO PLACEMENT OF CONCRETE.
3. IF REPAIR AREA EXPOSES EXISTING REINFORCING, EXISTING REINFORCING TO BE CLEANED.
4. CARE SHALL BE TAKEN DURING CONSOLIDATION OF CONCRETE TO ENSURE THERE ARE NO VOIDS IN THE CONCRETE AND AROUND EXPANSION JOINT COMPONENTS. FOLLOWING CONCRETING OPERATIONS THE ENGINEER SHALL INSPECT THE REPAIR AREA BY METHOD OF SOUNDING. ALL VOIDS SHALL BE FILLED WITH AN APPROVED NON-SHRINK GROUT.
5. ALL SURFACES IN CONTACT WITH JOINT SEALS SHALL BE CLEANED PRIOR TO INSTALLATION OF SEALS.
6. SEALS SHALL BE A CONTINUOUS JOINT SEALING ELEMENT, CONSISTING OF NATURAL RUBBER. EACH SEAL SHALL BE SUPPLIED AND INSTALLED IN ONE CONTINUOUS PIECE. NO SPLICE IN RUBBER SEAL WILL BE PERMITTED.

TEMPERATURE WIDTH ADJUSTMENT TABLE

LOCATION	TEMP.	40°C	35°C	30°C	25°C	20°C	15°C	10°C	5°C	0°C
SOUTH ABUTMENT	"A"	11	16	21	26	30	35	40	45	50

NOTES:

1. TEMPERATURE WIDTH ADJUSTMENT TABLE GIVEN BASED ON MOVEMENT TABLE AND TOP OF FINISHED CONCRETE ELEVATIONS FROM RECORD DRAWING B101-16-08. GIVEN FOR GENERAL INFORMATION AND MOVEMENT PURPOSES ONLY.
2. CONTRACTOR TO RECORD EXISTING GAP AND INSTALLATION TEMPERATURE AT TIME OF SEAL INSTALLATION.
3. INSTALLATION TEMPERATURE SHALL BE TAKEN AS THE MEAN SHADE AIR TEMPERATURE UNDER THE BRIDGE.

TABLE 1: STRIPSEAL LENGTH

LOCATION	APPROX LENGTH
SOUTH EXP JOINT	12.115 m

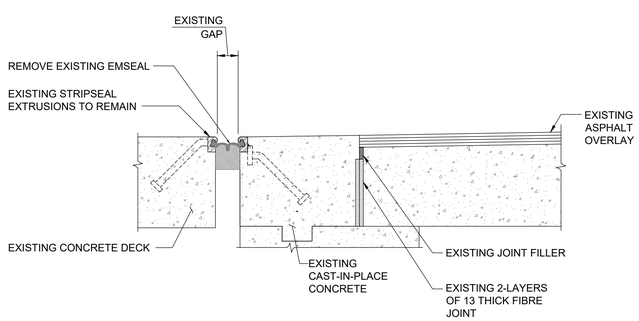

2 - - SOUTH EXPANSION BLOCKOUT REPAIR REPLACEMENT DETAIL

1 : 10

- FULL DEPTH DECK SIDE BLOCKOUT SHOWN AT SOUTH ABUTMENT WEST AND MIDDLE LANES ONLY
- STRIPSEAL NOT SHOWN FOR CLARITY. REFER TO SEAL REPLACEMENT DETAIL.

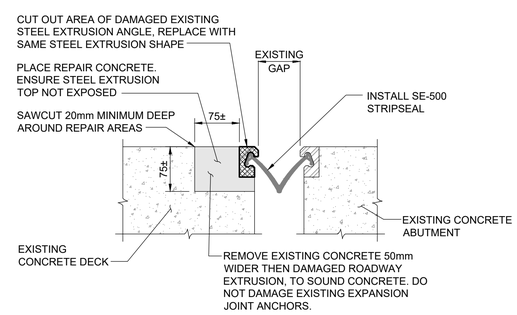

SECTION VIEW

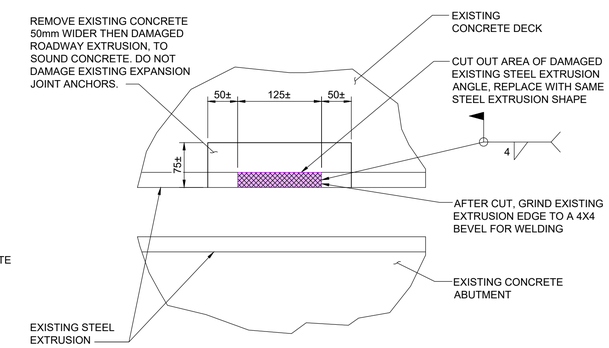

PLAN VIEW

NOTE: ALL EXISTING EXTRUSION STEEL ANGLE REPAIRS TO BE MADE PRIOR TO INSTALLATION OF STRIPSEAL.

3 - - DAMAGED ROADWAY EXTRUSION REPAIR DETAIL

1 : 5

LEGEND

- APPROXIMATE LANE LINE
- CRACK
- DAMAGED ROADWAY EXTRUSION REPAIR AREAS

ENGINEERS GEOSCIENTISTS MANITOBA
Certificate of Authorization
Tetra Tech Canada Inc.
No. 6499

B.M. ELEV.

NO.	REVISIONS	DATE	BY
0	ISSUED FOR TENDER	23.03.07	E.F.S.

TETRA TECH

DESIGNED BY	R.L.	CHECKED BY	E.F.S.
DRAWN BY	E.V.	APPROVED BY	E.F.S
HOR. SCALE: / VERTICAL:	AS NOTED	ACCEPTED BY	DATE
DATE	22.12.06	ORIGINAL SIGNED V. BANTHIA, M.SC, P.ENG., CIM, PMP BRIDGE PROJECTS ENGINEER	23.03.07

ORIGINAL DRAWING REVISION "00" SEALED BY E.F.G. SHEHATA 23.03.07

CONSULTANT DRAWING NO. 734-2200070500-DWG-S2110

THE CITY OF WINNIPEG
PUBLIC WORKS DEPARTMENT
ENGINEERING DIVISION

MINOR REHABILITATION OF ST JAMES BRIDGES
SOUTHBOUND BRIDGE

CITY DRAWING NUMBER B101-22-010

SHEET 8 OF 9

SOUTH EXPANSION JOINT REPAIR DETAILS

8