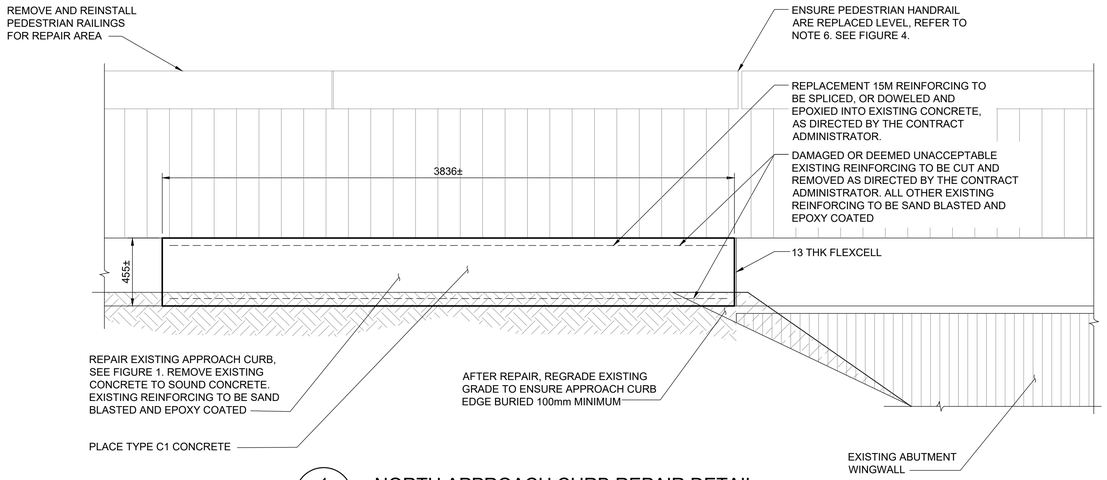

1 - - NORTH APPROACH CURB REPAIR DETAIL
1 : 20

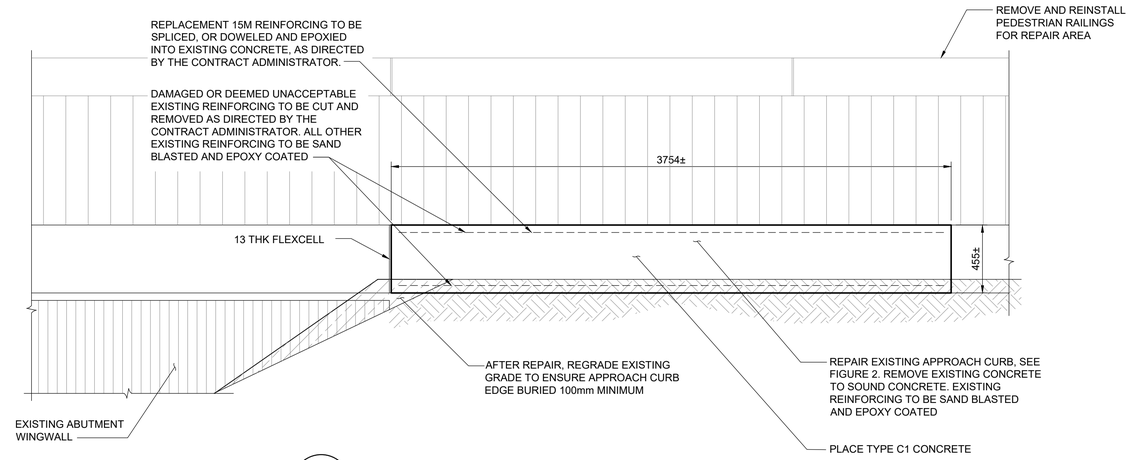

2 - - SOUTH APPROACH CURB REPAIR DETAIL
1 : 20

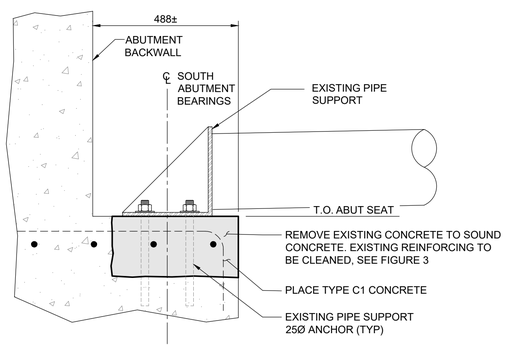

3 - - SOUTHBOUND BRIDGE SOUTH ABUTMENT PIPE SUPPORT REPAIRS
N.T.S.

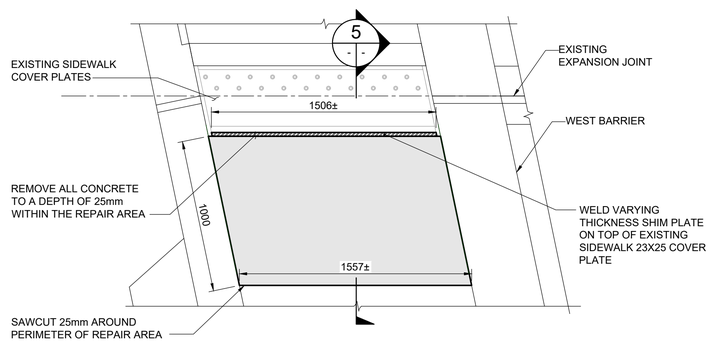

4 - - NORTH ABUTMENT TRIPPING HAZARD REPAIR DETAIL
1 : 20

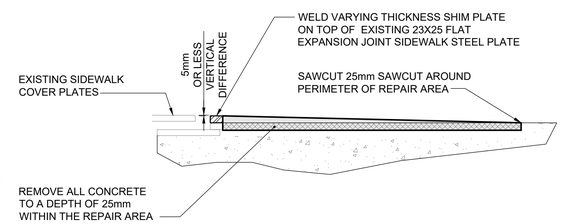

5 - - SECTION
1 : 10

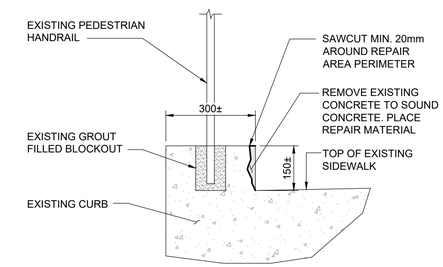

6 - - EXISTING CURB REPAIR DETAIL
1 : 10

ABUTMENT REPAIR NOTES:

1. PROVIDE TEMPORARY SUPPORT TO EXISTING PIPE.
2. SAWCUT 20MM MINIMUM DEEP AROUND DETERIORATED AREA.
3. REMOVE EXISTING CONCRETE TO SOUND CONCRETE.
4. IF REPAIR AREA EXPOSES EXISTING REINFORCING, EXISTING REINFORCING TO BE CLEANED TO REMOVE CORROSION.
5. ALL EXISTING GALVANIZED STEEL FOR PIPE SUPPORT SHALL BE CLEANED TO REMOVE SIGNS OF CORROSION. STEEL SHALL BE RECOATED WITH ZINC-BASED PAINT.

SIDEWALK REPAIR NOTES:

1. CLEAN EXISTING 23X25 FLAT EXPANSION JOINT SIDEWALK STEEL PLATE.
2. CONTRACTOR TO FIELD MEASURE THE HEIGHT DIFFERENCE BETWEEN EXISTING SLIDING SIDEWALK EXPANSION JOINT COVER PLATE AND EXISTING 23X25 FLAT EXPANSION JOINT SIDEWALK STEEL PLATE. CONTRACTOR TO FABRICATE 25 WIDE X VARYING THICKNESS SHIM PLATE. FABRICATED SHIM PLATE TO ENSURE LESS THAN 5mm VERTICAL DIFFERENCE BETWEEN THE TWO PLATES.
3. WELD VARYING THICKNESS SHIM PLATE ON TOP OF EXISTING 23X25 FLAT EXPANSION JOINT SIDEWALK STEEL PLATE.
4. CLEAN CONCRETE REPAIR AREA AS SPECIFIED AND APPLY BONDING AGENT.
5. PLACE REPAIR MATERIAL
6. MEASURE ACROSS THE WIDTH OF EXPANSION JOINT

TYPICAL CURB REPAIR NOTES:

1. DURING DEMOLITION DO NOT DAMAGE EXISTING REINFORCING.
2. IMMEDIATELY PRIOR TO PLACEMENT OF CONCRETE, ALL METAL SURFACES WHICH WILL BE IN CONTACT SHALL BE COATED WITH EPOXY ADHESIVE. RATE OF PLACEMENT OF ADHESIVE SHALL BE SUCH THAT THE ADHESIVE DOES NOT DRY OR SET BEFORE CONCRETE IS PLACED.
3. ALL EXISTING CONCRETE TO BE CLEANED OF DUST, DEBRIS AND CONTAINMENTS PRIOR TO PLACEMENT OF CONCRETE.
4. IF REPAIR AREA EXPOSES EXISTING REINFORCING, EXISTING REINFORCING TO BE SAND BLASTED AND EPOXY COATED
5. CARE SHALL BE TAKEN DURING CONSOLIDATION OF CONCRETE TO ENSURE THERE ARE NO VOIDS IN THE CONCRETE. FOLLOWING CONCRETING OPERATIONS THE ENGINEER SHALL INSPECT THE REPAIR AREA BY METHOD OF SOUNDING. ALL VOIDS SHALL BE FILLED WITH AN APPROVED NON-SHRINK GROUT.
6. FOR NORTH APPROACH SLAB CURB REPAIR, TOP OF CONCRETE CURB TO BE ADJUSTED TO REMOVE VERTICAL DIFFERENCES WHEN REINSTALLING PEDESTRIAN RAILING IN THE REPAIR AREA.

TABLE 1: REPAIR QUANTITIES

LOCATION	PRIX REPAIR AREA
CURB CONCRETE	4.770 m^2
PIPE REPAIR	0.200 m^2

FIGURE 1: SOUTHBOUND NORTH APPROACH CURB OUTSIDE FACE CONCRETE REPAIR

FIGURE 2: SOUTHBOUND SOUTH APPROACH CURB OUTSIDE FACE CONCRETE REPAIR

FIGURE 3: SOUTHBOUND BRIDGE SOUTH ABUTMENT PIPE SUPPORT

FIGURE 4: SOUTHBOUND BRIDGE UNEVEN PEDESTRIAN HANDRAIL NORTH APPROACH

ENGINEERS GEOSCIENTISTS MANITOBA
Certificate of Authorization
Tetra Tech Canada Inc.
No. 6499

B.M.
ELEV.

NO.	REVISIONS	DATE	BY
0	ISSUED FOR TENDER	23.03.07	E.F.S.

TETRA TECH

DESIGNED BY	R.L.	CHECKED BY	E.F.S.
DRAWN BY	E.V.	APPROVED BY	E.F.S
HOR. SCALE: / VERTICAL:	AS NOTED	ACCEPTED BY / DATE	ORIGINAL SIGNED 23.03.07
DATE	22.12.06	V. BANTHIA, M. SC. P.ENG., CIM, PMP BRIDGE PROJECTS ENGINEER	

ORIGINAL DRAWING REVISION "00" SEALED BY E.F.G. SHEHATA 23.03.07

CONSULTANT DRAWING NO.
734-2200070500-DWG-S2111

Winnipeg
THE CITY OF WINNIPEG
PUBLIC WORKS DEPARTMENT
ENGINEERING DIVISION

MINOR REHABILITATION OF ST JAMES BRIDGES
SOUTHBOUND BRIDGE

CITY DRAWING NUMBER
B101-22-011

SHEET 9 OF 9

SIDEWALK CURB AND SOUTH ABUTMENT REPAIR DETAILS

9