A1 SIZE – 594mm x 841mm

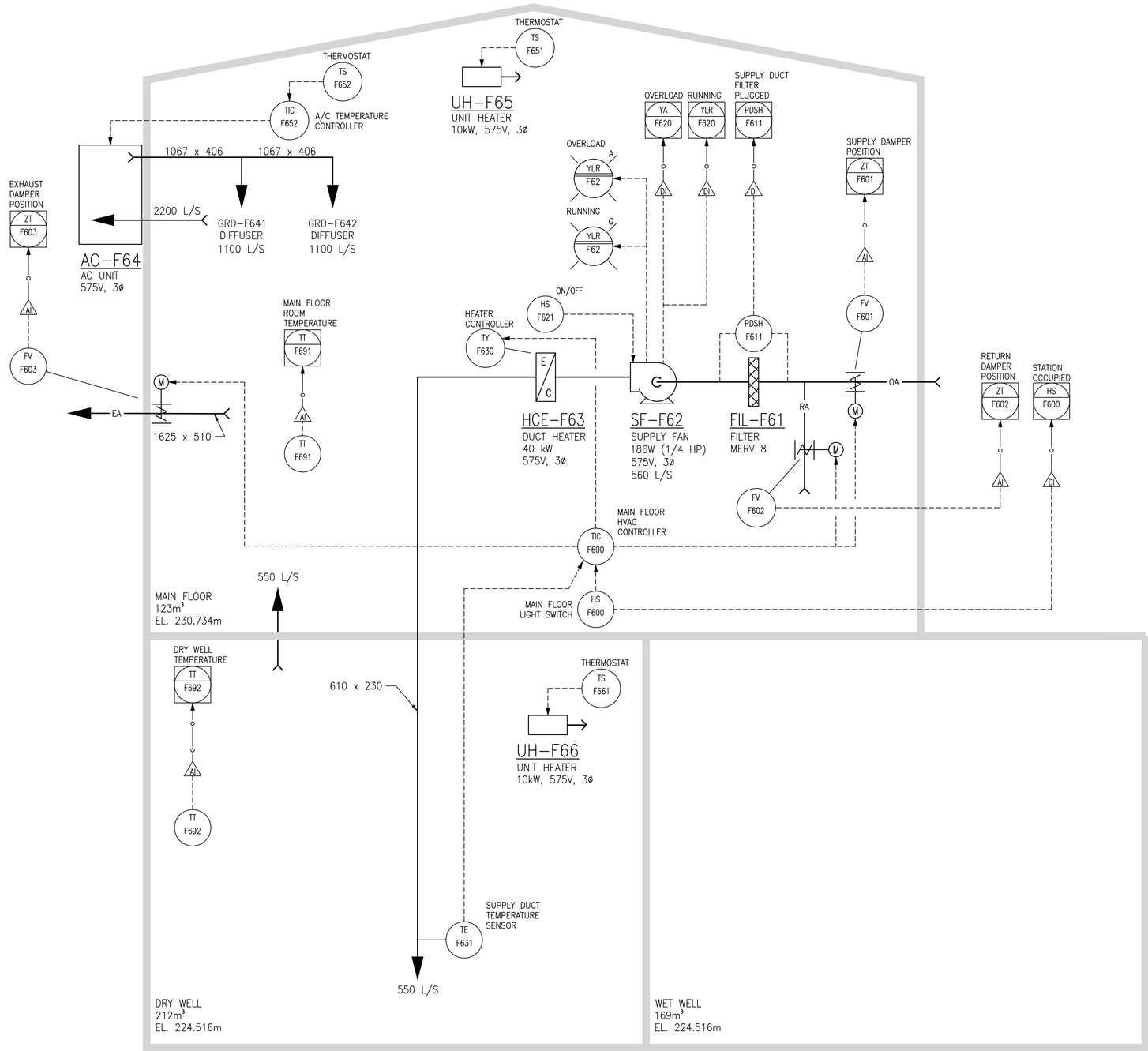

FLOW DIAGRAM

SCALE: N.T.S.

LEGEND:

NEW EQUIPMENT

MOTORIZED DAMPER ACTUATOR

DEVICE DESCRIPTORS:

AI	ANALOG INPUT
DI	DISCRETE INPUT

FUNCTIONAL IDENTIFIERS:

AC	AIR CONDITIONING
EA	EXHAUST AIR
FIL	DUCT AIR FILTER
FV	DAMPER
GRD	DUCT GRILL
HCE	DUCT HEATING COIL
HS	HAND SWITCH
OA	OUTDOOR AIR
PDSH	PRESSURE DIFFERENTIAL SWITCH HIGH
SF	SUPPLY FAN
TIC	TEMPERATURE CONTROLLER
TE	TEMPERATURE ELEMENT
TS	TEMPERATURE SWITCH
TT	TEMPERATURE TRANSMITTER
UH	UNIT HEATER

DRAWING NUMBER	REFERENCE DRAWINGS
1–0118F–M0003	MECHANICAL SCHEDULES
1–0118F–M0002	MECHANICAL NEW WORK – PLANS & SCHEDULES
1–0118F–E0005	ELECTRICAL SINGLE LINE DIAGRAM

ENGINEERS GEOSCIENTISTS MANITOBA
Certificate of Authorization
SNC-Lavalin Inc.
No. 4489

NO.	REVISIONS	DATE	DESIGN	CHECK
00	ISSUED FOR CONSTRUCTION, TENDER 167–2023	2023/03/02	MS	BC

SNC·LAVALIN

SNC–LAVALIN INC.
148 Nature Park Way
Winnipeg, MB, Canada R3P 0X7
204–786–8080

DESIGNED BY: N. LEE	CHECKED BY: B. CLEVEN
DRAWN BY: M. SARIC	APPROVED BY: S. NORSWORTHY
SCALE: N.T.S.	ISSUED FOR CONSTRUCTION BY: K. ZUREK
DATE: 2022/07/11	DATE: 2023/03/02
CONSULTANT NO.:	

ENGINEER'S SEAL

2023-03-02
PROVINCE OF MANITOBA
N.C. LEE
Member
23965
REGISTERED PROFESSIONAL ENGINEER

Winnipeg
THE CITY OF WINNIPEG
WATER AND WASTE DEPARTMENT

BANNATYNE FLOOD PUMPING STATION
2023 UPGRADES
PROCESS AND INSTRUMENTATION DIAGRAM
HVAC SYSTEM

CITY DRAWING NUMBER	SHEET	REV.	SIZE
1–0118F–P0001	001	00	A1

1–0118F–P0001–001_Rev00.dwg

LAST SAVE: 2023/03/02 – 2:02pm
PATH: \\Winpdc1\proj$\691232\4ENG\49PRC\DD – General DWG\1–0118F–P0001–001_Rev00.dwg