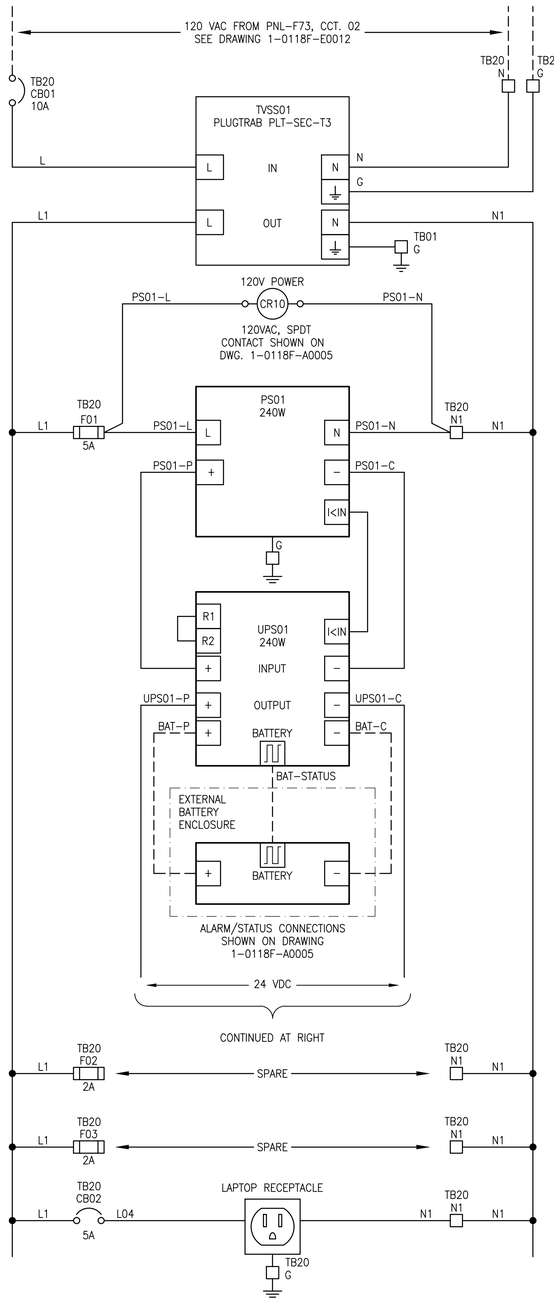

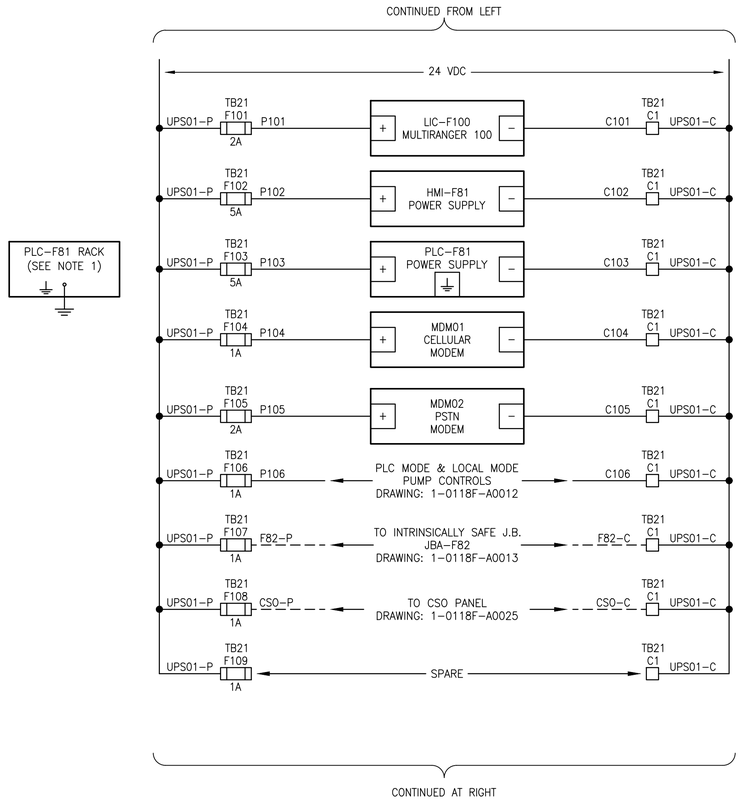

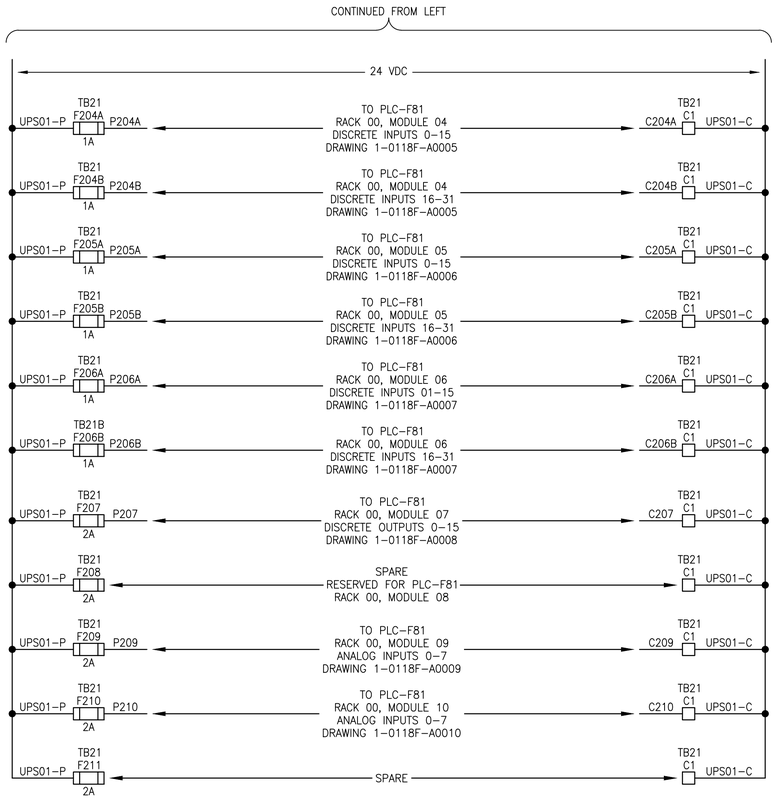

POWER DISTRIBUTION SCHEMATIC

LEGEND:

- FIELD WIRE
- INTERNAL WIRE
- CRXX — CONTROL RELAY

GENERAL NOTES:

1. PLC-F81 RACK GROUND WILL BE CONNECTED TO GROUND.
2. PROVIDE AND INSTALL A 12AWG, TECK90, 4C, 300V CONDUCTOR BETWEEN CP-F81 AND EXTERNAL BATTERY ENCLOSURE TERMINATIONS.
3. UPS01 STATUS CONTACTS ARE NOT DEPICTED ON THIS DRAWING.

DRAWING NUMBER	REFERENCE DRAWINGS
1-0118F-A0002	PANEL LAYOUT & BILL OF MATERIALS PLC CONTROL PANEL CP-F81

ENGINEERS GEOSCIENTISTS MANITOBA
Certificate of Authorization
SNC-Lavalin Inc.
No. 4489

NO.	REVISIONS	DATE	DESIGN	CHECK
00	ISSUED FOR CONSTRUCTION, TENDER 167-2023	2023/03/02	MS	BC

SNC·LAVALIN
SNC-LAVALIN INC.
148 Nature Park Way
Winnipeg, MB, Canada R3P 0X7
204-786-8080

DESIGNED BY: M. SARIC	CHECKED BY: B. CLEVEN
DRAWN BY: M. SARIC	APPROVED BY: B. CLEVEN
SCALE: N.T.S.	ISSUED FOR CONSTRUCTION BY: K. ZUREK
DATE: 2022/07/06	DATE: 2023/03/02
CONSULTANT NO.:	

ENGINEER'S SEAL
PROVINCE OF MANITOBA
M. SARIC
Member
46571
REGISTERED PROFESSIONAL ENGINEER
2023/03/02

Winnipeg
THE CITY OF WINNIPEG
WATER AND WASTE DEPARTMENT

BANNATYNE FLOOD PUMPING STATION
2023 UPGRADES
POWER DISTRIBUTION SCHEMATIC
PLC CONTROL PANEL CP-F81

CITY DRAWING NUMBER	SHEET	REV.	SIZE
1-0118F-A0004	001	00	A1

REV: 00

A1 SIZE - 594mm x 841mm

LAST SAVE: 2023/03/02 - 4:11pm
PATH: \\Winpdc1\proj$\691232\4ENG\48IC\DD - General DWG\1-0118F-A0004-001_Rev00.dwg

1-0118F-A0004-001_Rev00.dwg