A1 SIZE – 594mm x 841mm

UNIT HEATER SCHEDULE

TAG	SERVICE	HEATING CAPACITY	FLOW RATE	VOLTS/Ø	TYPE
UH–F65	MAIN FLOOR	10 kW	330 L/s (700 CFM)	575/3	STELPRO ASHU 1063
UH–F66	DRY WELL	10 kW	330 L/s (700 CFM)	575/3	STELPRO ASHU 1063

NOTES:
1) UNIT HEATERS SUPPLIED WITH THERMOSTAT, SETPOINT 15°C ADJUSTABLE.

DUCT HEATING SCHEDULE

TAG	SERVICE	HEATING CAPACITY	FLOW RATE	VOLTS/Ø	CONTROL	TYPE
HCE–F63	SUPPLY DUCT	39 kW	560 L/s (1185 CFM)	575/3	0–10V	PRICE DF CF00V 610x230

NOTES:
1) SUPPLY AIR TEMPERATURE SENSOR AT BOTTOM OF DUCT.
2) SETPOINT 15°C ADJUSTABLE.
3) INTEGRAL WITH AIR PROVING SWITCH

DAMPER SCHEDULE

TAG	SERVICE	AIRFLOW	SIZE	FAIL POSITION	VOLTAGE	CONTROL SIGNAL	TYPE
FV–F601	OUTDOOR AIR	560 L/s (1185 CFM)	813x610 mm (32x24 in)	OPEN	24VAC	0–10V	TAMCO 9000 THERMALLY INSULATED DAMPER
FV–F602	RETURN AIR	560 L/S (1185 CFM)	813x610 mm (32x24 in)	CLOSED	24VAC	0–10V	TAMCO 1000 AIR–FOIL CONTROL DAMPER
FV–F603	EXHAUST AIR	560 L/S (1185 CFM)	1625x510 mm (64x20 in)	OPEN	24VAC	0–10V	TAMCO 9000 THERMALLY INSULATED DAMPER

NOTES:
1)DAMPERS CONTROLLED WITH BELIMO NFBUP–S ELECTRIC ACTUATORS, 24VAC, 0–10V, 90 IN–LB.
2)DAMPER POSITION CONTROLLED BY OCCUPANCY SWITCH. UNOCCUPIED: OA & EA DAMPERS 25% OPEN, RA DAMPER 75% OPEN. OCCUPIED: OA & EA DAMPERS 100% OPEN, RA DAMPER 0% OPEN.

DIFFUSER SCHEDULE

TAG	SERVICE	AIRFLOW	SIZE	TYPE
GRD–F641	MAIN FLOOR	1100 L/s (2330 CFM)	864x356 mm (34x14 in)	PRICE 34X14 520D/F/S/A/B12
GRD–F642	MAIN FLOOR	1100 L/s (2330 CFM)	864x356 mm (34x14 in)	PRICE 34X14 520D/F/S/A/B12

NOTES:
1) ADJUST BLADES TO DISTRIBUTE AIR TOWARDS MOTORS

COOLING EQUIPMENT SCHEDULE

TAG	SERVICE	COOLING CAPACITY	FLOW RATE	VOLTS/Ø	TYPE
AC–F64	MAIN FLOOR	44 kW (12.5 TON)	2195 L/s (4650 CFM)	575/3	BARD W150APQ0ZEPXX3X W/LV6000

NOTES:
1) COOLING SETPOINT 20°C, ADJUSTABLE
2) C/W RG–10W RETURN GRILLE

SUPPLY FAN SCHEDULE

TAG	SERVICE	FLOW RATE	VOLTS/Ø	TYPE
SF–F62	DRY WELL	560 L/s (1185 CFM)	575/3	GREENHECK SQ–130

NOTES:
1) C/W WITH MATCHING AAF SUREPLEAT SIDE ACCESS FILTER HOUSING AND PERFECTPLEAT 100mm (4") HC M8 FILTERS

FIRE EXTINGUISHER SCHEDULE

TAG	RATING/ WEIGHT	TYPE	NOTES
FEX–F61	2A, 5BC, 4.5 KG (10 LB)	DRY CHEMICAL	NEW

SUMP PUMP SCHEDULE

TAG	SERVICE	POWER	VOLTS/Ø	TYPE
P–F05	SUMP PIT	1 HP	120/1	SUBMERSIBLE, MIN. 250 L/MIN. @ 8M HEAD

NOTES:
1) PROVIDE BACKFLOW VALVES BEFORE DISCHARGE TO WET WELL.
2) MOTOR TO INCLUDE AUTOMATIC THERMAL AND OVERLOAD PROTECTION.

CONSTRUCTION NOTES:

1. INSTALL NEW WATER METER (SUPPLIED BY CLIENT) AND MAIN SHUTOFF VALVE.
2. SUPPLY AND INSTALL NEW BACKFLOW PREVENTER C/W RELIEF VALVE AIR GAP DRAIN TO SUMP PIT.
3. SUPPLY AND INSTALL NEW PUMP PACKING LINES, C/W VALVES, SOLENOID VALVE, HAND VALVE FOR FLOW CONTROL, FLOW SWITCH.
4. SUPPLY AND INSTALL NEW HOSE BIBB.
5. EXISTING SHUTOFF TO REMAIN IN OPEN POSITION: CONTROL STEM TO REMAIN.
6. SUPPLY AND INSTALL NEW SUMP PUMP, PIPING, VALVES, AND CHECK VALVES, CONNECT TO EXISTING DISCHARGE TO WET WELL.

GENERAL NOTES

1. COORDINATE WITH DIVISION 26 WHERE EQUIPMENT THAT REQUIRES NEW ELECTRICAL IS INSTALLED.
2. ALL EQUIPMENT, DEVICES AND CABLING ARE NEW.

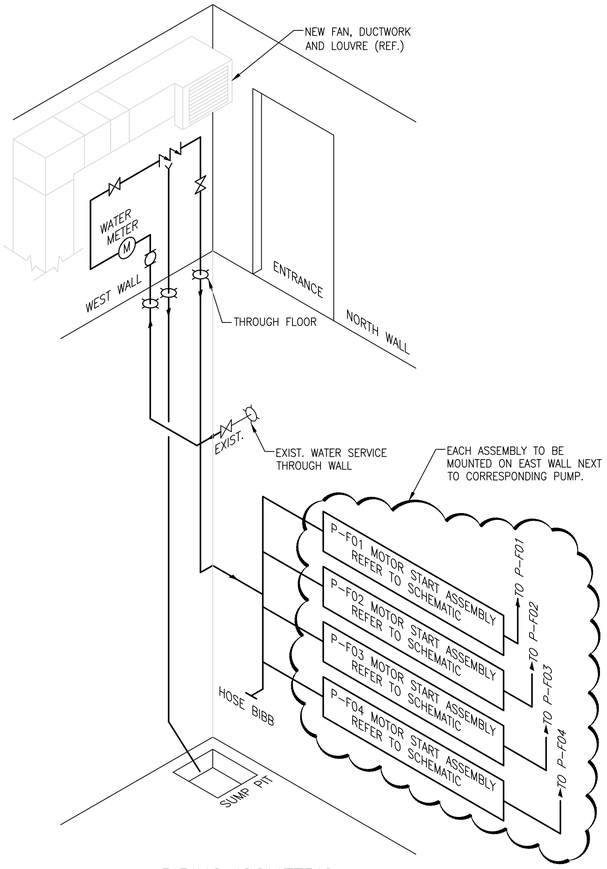

PIPING ISOMETRIC
SCALE: N.T.S.

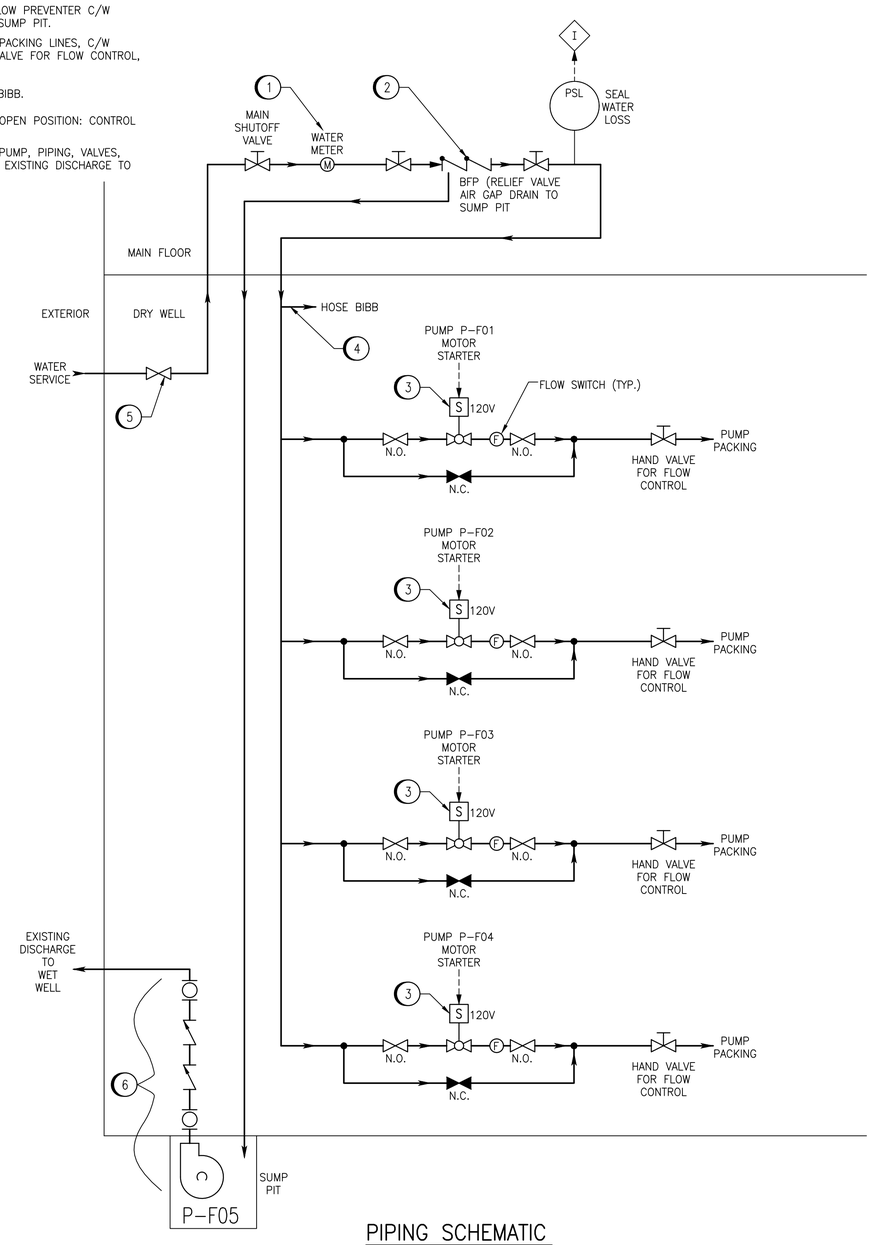

PIPING SCHEMATIC
SCALE: N.T.S.

DRAWING NUMBER	REFERENCE DRAWINGS
1–0118F–M0002	MECHANICAL PLAN LAYOUT, MAIN FLOOR AND EXTERIOR, NEW WORK
1–0118F–P0001	PROCESS AND INSTRUMENTATION DIAGRAM HVAC SYSTEM

ENGINEERS GEOSCIENTISTS MANITOBA
Certificate of Authorization
SNC-Lavalin Inc.
No. 4489

NO.	REVISIONS	DATE	DESIGN	CHECK
00	ISSUED FOR CONSTRUCTION, TENDER 167–2023	2023–03–02	NL	BC

SNC·LAVALIN
SNC–LAVALIN INC.
148 Nature Park Way
Winnipeg, MB, Canada R3P 0X7
204–786–8080

DESIGNED BY: N. LEE	CHECKED BY: S. NORSWORTHY
DRAWN BY: D. CALVERLEY	APPROVED BY: B. CLEVEN
SCALE: AS NOTED	ISSUED FOR CONSTRUCTION BY: K. ZUREK
DATE: 2022/08/17	DATE: 2023/02/17
CONSULTANT NO.:	

ENGINEER'S SEAL
2023-03-02
PROVINCE OF MANITOBA
N.C. LEE
Member 23965
REGISTERED PROFESSIONAL ENGINEER

Winnipeg
THE CITY OF WINNIPEG
WATER AND WASTE DEPARTMENT

BANNATYNE FLOOD PUMPING STATION
2023 UPGRADES
MECHANICAL SCHEDULES

NEW WORK

CITY DRAWING NUMBER	SHEET	REV.	SIZE
1–0118F–M0003	001	00	A1

1–0118F–M0003.dwg

LAST SAVE: 2023/03/02 – 3:26pm
PATH: M:\691232\4ENG\45MEC\DD – General DWG\1–0118F–M0003.dwg