A1 SIZE – 594mm x 841mm

NOTES:

1. ALL EQUIPMENT, INSTRUMENTS AND PIPING SHOWN ON THIS DRAWING ARE NEW AND ARE PROVIDED UNLESS MARKED AS EXISTING.
2. ELEVATION WAS NOT CONFIRMED.
3. THE LEVEL CONTROLLER IS ENABLED WHEN THERE IS A PLC FAILURE.
4. PLC FUNCTION BLOCKS WITH THE SAME IDENTIFIER TO BE IMPLEMENTED AS ONE SINGLE FUNCTION BLOCK WITHIN THE PLC PROGRAM.
5. COORDINATED WITH THE CONTRACT ADMINISTRATOR FOR ELEVATION OF SWITCH AND MARK FINAL ELEVATION ON AS-BUILT DRAWINGS.
6. DUTY 1, DUTY 2, DUTY 3 AND DUTY 4 PUMP CONTROL SETPOINTS ARE ROTATED BETWEEN ALL FOUR FLOOD PUMPS BASED ON THE PUMP THAT HAS BEEN OFF THE LONGEST.
7. MECHANICAL PIPING AND COMPONENTS IS INDICATIVE ONLY AND IS NOT TO BE USED FOR CONSTRUCTION PURPOSES. REFER TO MECHANICAL DRAWINGS FOR EXACT CONSTRUCTION INSTALLATION DETAILS.
8. COORDINATE WITH THE CONTRACT ADMINISTRATOR FOR ELEVATION OF SWITCH AND MARKED FINAL ELEVATION ON AS-BUILT DRAWINGS. SEE DRAWING M006 FOR LOCATION OF DEVICE.

KEY ELEVATIONS:		NOTES
STATION ACTIVATION LEVEL (RIVER LEVEL)	226.330 m	SEE NOTE 2
WET WELL TRANSDUCER HEAD ELEVATION	228.448 m	SEE NOTE 2
HIGH HIGH WET WELL ALARM LEVEL	227.710 m	SEE NOTE 2
HIGH WET WELL ALARM LEVEL	226.860 m	SEE NOTE 2
DRY WELL FLOOR	224.516 m	SEE NOTE 2
WET WELL BOTTOM	223.418 m	SEE NOTE 2

PUMP DUTY CONTROL SETPOINTS					
PUMP DUTY	START		STOP		NOTES
DUTY 1	226.26 m	2.842 m	225.64 m	2.222 m	SEE NOTE 6
DUTY 2	226.41 m	2.992 m	225.80 m	2.382 m	SEE NOTE 6
DUTY 3	226.56 m	3.142 m	225.95 m	2.532 m	SEE NOTE 6
DUTY 4	226.71 m	3.292 m	226.10 m	2.682 m	SEE NOTE 6

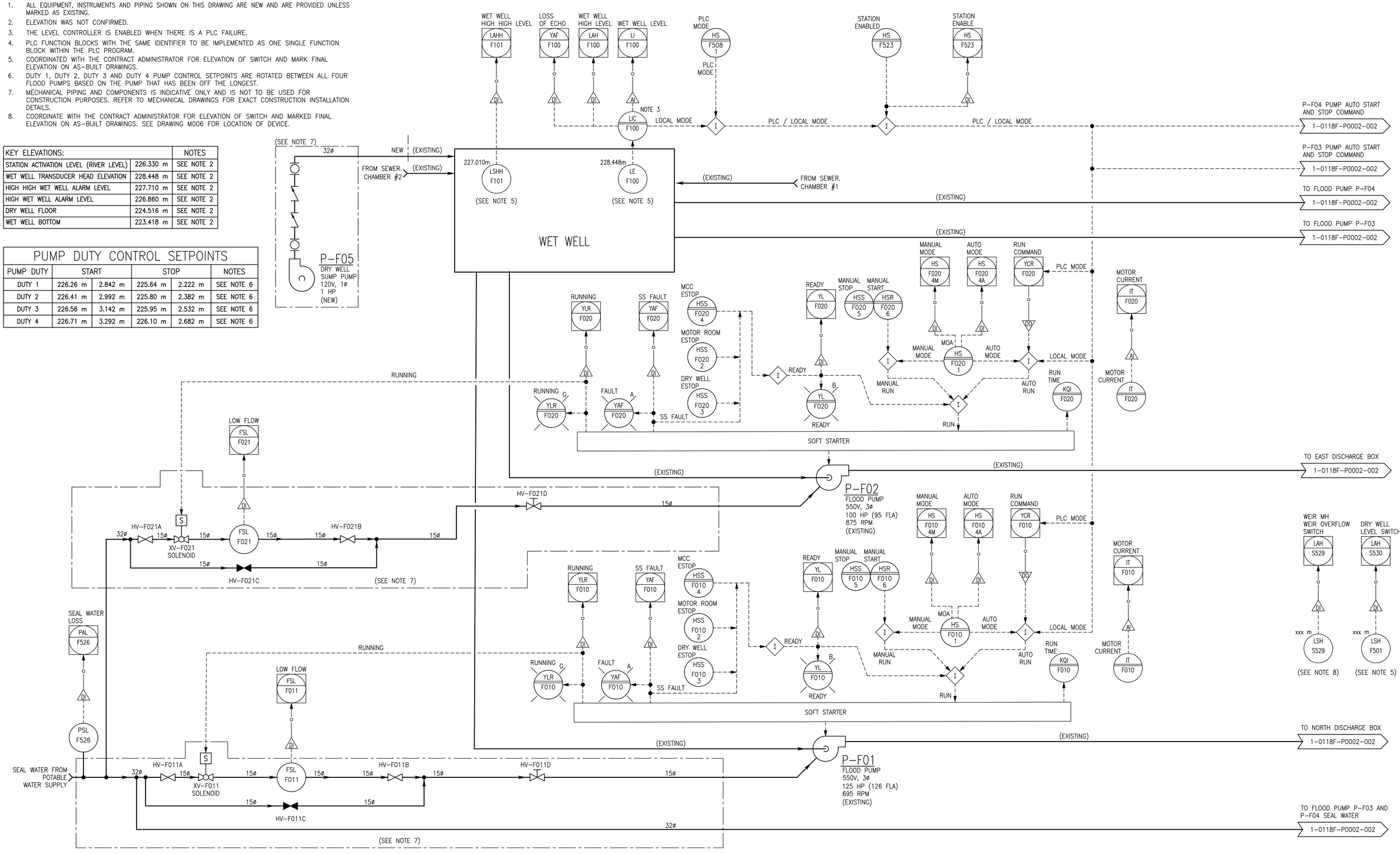

LEGEND:

DEVICE DESCRIPTORS:

A	AMBER
AI	ANALOG INPUT
AO	ANALOG OUTPUT
B	BLUE
DI	DISCRETE INPUT
DO	DISCRETE OUTPUT
G	GREEN
MOA	MANUAL/OFF/AUTO
R	RED

FUNCTIONAL IDENTIFIERS:

FSL	LOW FLOW SWITCH
HS	HAND SWITCH
HSR	HAND SWITCH START
HSS	HAND SWITCH STOP OR ESTOP
IT	CURRENT TRANSMITTER
KQI	MOTOR RUN TIME
LIC	LEVEL INDICATING CONTROLLER
LIT	LEVEL INDICATING TRANSMITTER
LSH	LEVEL SWITCH HIGH
PSL	PRESSURE SWITCH LOW
XV	ON/OFF SOLENOID VALVE
YAF	ALARM LIGHT
YL	STATUS LIGHT
YLR	RUNNING STATUS LIGHT

ENGINEERS GEOSCIENTISTS MANITOBA
Certificate of Authorization
SNC-Lavalin Inc.
No. 4489

NO.	REVISIONS	DATE	DESIGN	CHECK
00	ISSUED FOR CONSTRUCTION, TENDER 167-2023	2023/03/02	MS	BC

SNC·LAVALIN
SNC-LAVALIN INC.
148 Nature Park Way
Winnipeg, MB, Canada R3P 0X7
204-786-8080

DESIGNED BY: M. SARIC	CHECKED BY: B. CLEVEN
DRAWN BY: M. SARIC	APPROVED BY: B. CLEVEN
SCALE: N.T.S.	ISSUED FOR CONSTRUCTION BY: K. ZUREK
DATE: 2022/07/11	DATE: 2023/03/02
CONSULTANT NO.:	

ENGINEER'S SEAL
PROVINCE OF MANITOBA
M. SARIC
Member
46571
REGISTERED PROFESSIONAL ENGINEER
2023-03-03
REV. 00

Winnipeg
THE CITY OF WINNIPEG
WATER AND WASTE DEPARTMENT

BANNATYNE FLOOD PUMPING STATION
2023 UPGRADES
PROCESS AND INSTRUMENTATION DIAGRAM
FLOOD PUMPING

CITY DRAWING NUMBER	SHEET	REV.	SIZE
1-0118F-P0002	001	00	A1

1-0118F-P0002-001_Rev00.dwg

LAST SAVE: 2023/03/03 – 7:48am
PATH: \\Winpdc1\proj$\691232\4ENG\49PRC\DD – General DWG\1-0118F-P0002-001_Rev00.dwg