A1 SIZE – 594mm x 841mm

GENERAL NOTES:

1. ALL EQUIPMENT, DEVICES AND CABLING SHOWN ARE NEW AND ARE TO BE PROVIDED AND INSTALLED, UNLESS OTHERWISE INDICATED AS EXISTING.
2. THIS GROUNDING RISER DIAGRAM REPRESENTS THE MINIMUM GROUNDING AND BONDING SPECIFICATIONS. ADDITIONAL GROUNDING AND BONDING HARDWARE MAY BE REQUIRED TO MEET C.E.C REQUIREMENTS.
3. ALL NEW GROUND WIRE IS TO BE INSULATED (GREEN).

SPECIFIC NOTES:

1. PROVIDE AND INSTALL A NEW STATION GROUNDING ELECTRODE GRID USING 19mm, COPPER-CLAD GROUNDING RODS SPACED NOT LESS THAN 3m APART. GROUNDING RODS ARE TO BE DRIVEN TO A MINIMUM DEPTH OF 10m. CONNECTIONS TO GROUNDING RODS ARE TO BE MADE USING EXOTHERMIC WELD OR COMPRESSION CONNECTION ONLY. GROUND WELLS ARE TO BE PLACED AT GRADE TO FACILITATE INSPECTION OF CONNECTION POINTS. SEE DETAIL A.

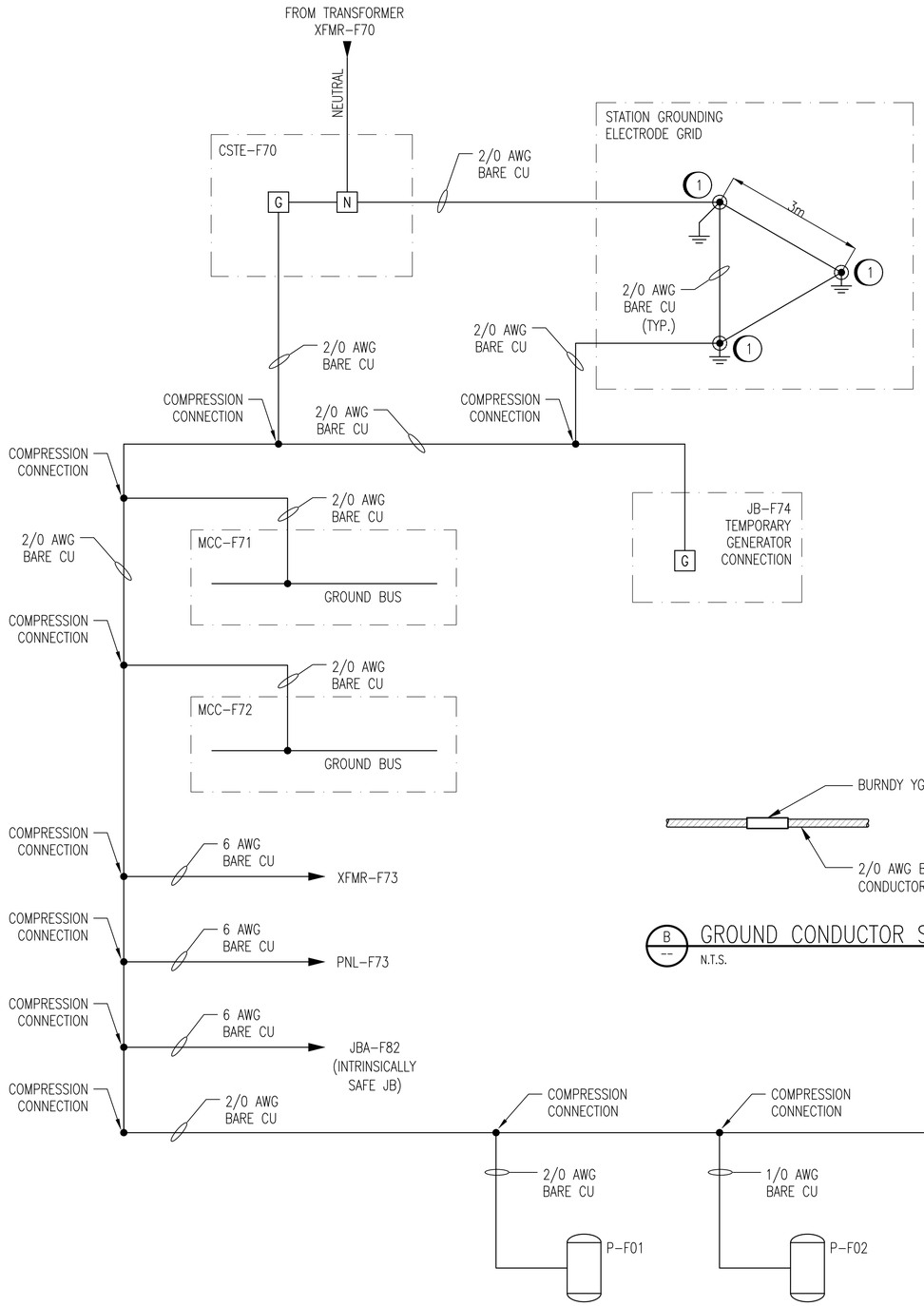

GROUNDING RISER DIAGRAM

SCALE: N.T.S.

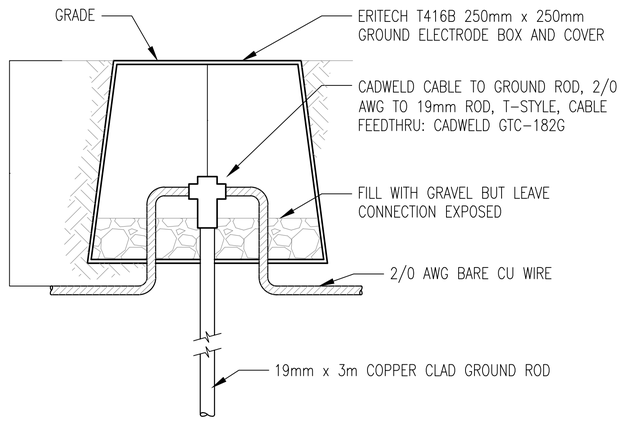

A -- GROUND WELL DETAIL

N.T.S.

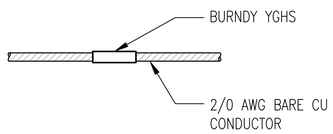

B -- GROUND CONDUCTOR SPLICE

N.T.S.

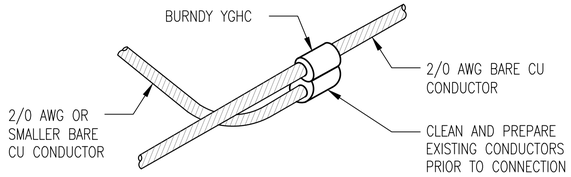

C -- GROUND CONDUCTOR TEE

N.T.S.

ENGINEERS GEOSCIENTISTS MANITOBA
Certificate of Authorization
SNC-Lavalin Inc.
No. 4489

DRAWING NUMBER	REFERENCE DRAWINGS
1-0118F-E0006	ELECTRICAL PLAN LAYOUT MAIN FLOOR AND EXTERIOR
1-0118F-E0005	ELECTRICAL SINGLE LINE DIAGRAM

NO.	REVISIONS	DATE	DESIGN	CHECK
00	ISSUED FOR CONSTRUCTION, TENDER 167-2023	2023/03/02	MS	BC

SNC·LAVALIN

SNC-LAVALIN INC.
148 Nature Park Way
Winnipeg, MB, Canada R3P 0X7
204-786-8080

DESIGNED BY: N. ESCHUK	CHECKED BY: B. CLEVEN
DRAWN BY: B. WILKS	APPROVED BY: B. CLEVEN
SCALE: N.T.S.	ISSUED FOR CONSTRUCTION BY: K. ZUREK
DATE: 2022/06/24	DATE: 2023/03/02
CONSULTANT NO.:	

ENGINEER'S SEAL

PROVINCE OF MANITOBA
M. SARTO
Member
46571
REGISTERED PROFESSIONAL ENGINEER
2023-03-02

REV: 00

Winnipeg

THE CITY OF WINNIPEG
WATER AND WASTE DEPARTMENT

BANNATYNE FLOOD PUMPING STATION
2023 UPGRADES
GROUNDING INSTALLATION
DETAILS

CITY DRAWING NUMBER	SHEET	REV.	SIZE
1-0118F-E0009	001	00	A1

LAST SAVE: 2023/03/02 – 3:58pm
PATH: \\Winpdc1\proj$\691232\ENG\47ELE\DD – General DWG\1-0118F-E0009-001_Rev00.dwg

1-0118F-E0009-001_Rev00.dwg