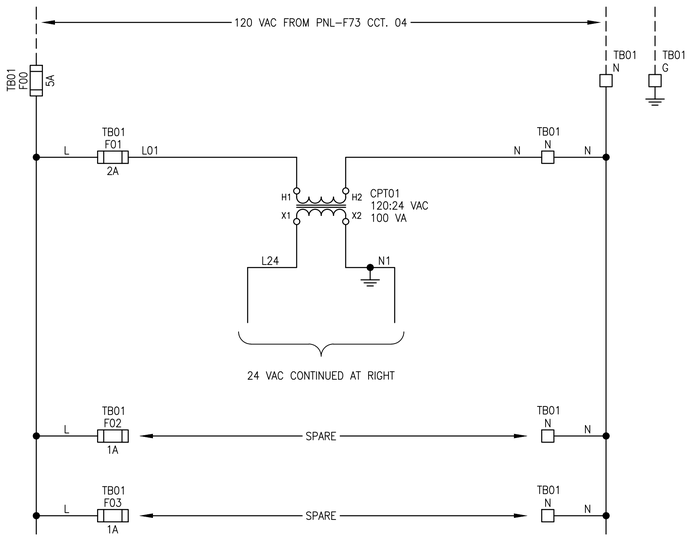

120 VAC POWER SCHEMATIC

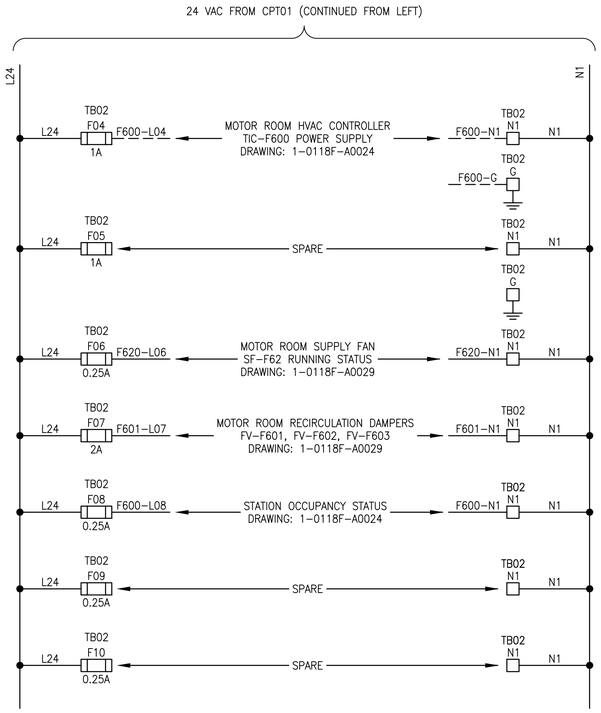

24 VAC SCHEMATIC

FUSE SCHEDULE			
TB	IDENTIFIER	SIZE	RATED CURRENT (A)
TB01	F00	CLASS CC	5.0
	F01	5x20mm	2.0
	F02	5x20mm	1.0
	F03	5x20mm	1.0
TB02	F04	5x20mm	1.0
	F05	5x20mm	1.0
	F06	5x20mm	0.25
	F07	5x20mm	2.0
	F08	5x20mm	0.25
	F09	5x20mm	0.25
	F10	5x20mm	0.25

NOTES:

1. ALL 120 VAC POWER WIRING TO BE A MINIMUM OF 14 AWG UNLESS OTHERWISE INDICATED.
2. ALL 24 VAC POWER WIRING TO BE A MINIMUM OF 12 AWG UNLESS OTHERWISE INDICATED.
3. REFER TO REFERENCE DRAWINGS FOR PANEL INTERNAL WIRING.

DRAWING NUMBER	REFERENCE DRAWINGS
1-0118F-A0029	LOOP DIAGRAM MOTOR ROOM RECIRCULATION DAMPER CONTROL
1-0118F-A0028	LOOP DIAGRAM HCE-F63 MOTOR ROOM DUCT HEATER
1-0118F-A0024	LOOP DIAGRAM STATION OCCUPANCY SWITCH HS-F600
1-0118F-A0014	PANEL LAYOUT & BILL OF MATERIAL HVAC VENTILATION PANEL JBA-F83
1-0118F-A0001	AUTOMATION PLAN LAYOUT MAIN FL, LOWER LEVEL AND CHAMBER AREAS

ENGINEERS GEOSCIENTISTS MANITOBA
Certificate of Authorization
SNC-Lavalin Inc.
No. 4489

NO.	REVISIONS	DATE	DESIGN	CHECK
00	ISSUED FOR CONSTRUCTION, TENDER 167-2023	2023/03/02	MS	BC

SNC·LAVALIN

SNC-LAVALIN INC.
148 Nature Park Way
Winnipeg, MB, Canada R3P 0X7
204-786-8080

DESIGNED BY: M. SARIC	CHECKED BY: B. CLEVEN
DRAWN BY: M. SARIC	APPROVED BY: B. CLEVEN
SCALE: N.T.S.	ISSUED FOR CONSTRUCTION BY: K. ZUREK
DATE: 2022/07/06	DATE: 2023/03/02
CONSULTANT NO.:	

ENGINEER'S SEAL

PROVINCE OF MANITOBA
M. SARIC
Member
46571
REGISTERED PROFESSIONAL ENGINEER
2023/03/02

REV: 00

Winnipeg
THE CITY OF WINNIPEG
WATER AND WASTE DEPARTMENT

BANNATYNE FLOOD PUMPING STATION
2023 UPGRADES
POWER DISTRIBUTION SCHEMATIC
HVAC VENTILATION CONTROL PANEL
JBA-F83

CITY DRAWING NUMBER	SHEET	REV.	SIZE
1-0118F-A0015	001	00	A1

1-0118F-A0015-001_Rev00.dwg

A1 SIZE - 594mm x 841mm

LAST SAVE: 2023/03/02 - 4:18pm
PATH: \\Winpdc1\proj$\691232\4ENG\48IC\DD - General DWG\1-0118F-A0015-001_Rev00.dwg