B SIZE – 279mm x 432mm

LAST SAVE: 2023/03/02 – 4:20pm
PATH: \\Winpdc1\proj$\691232\4ENG\48IC\DD – General DWG\1-0118F-A0016-001_Rev00.dwg

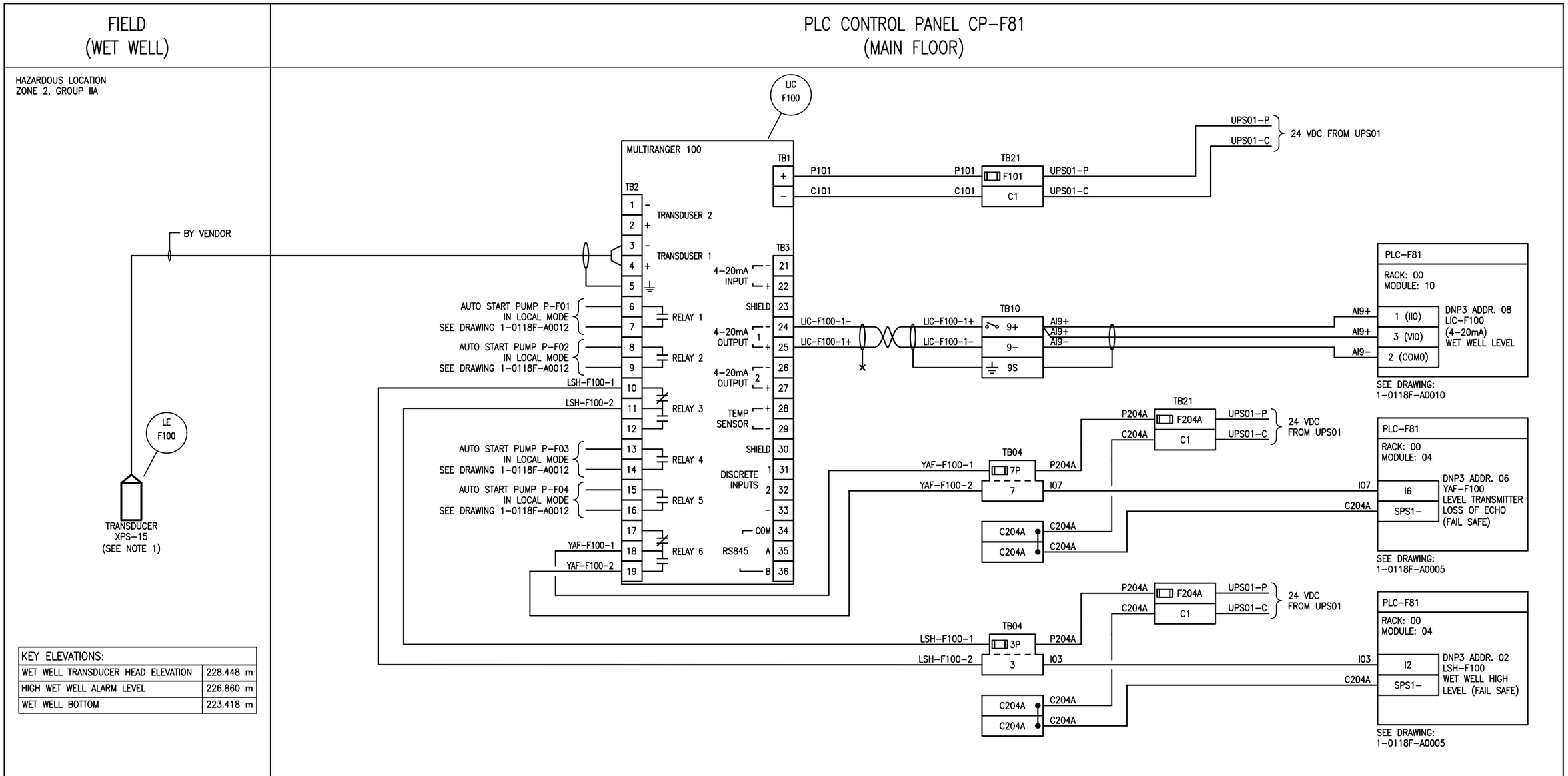

KEY ELEVATIONS:	
WET WELL TRANSDUCER HEAD ELEVATION	228.448 m
HIGH WET WELL ALARM LEVEL	226.860 m
WET WELL BOTTOM	223.418 m

NOTES:

1. EXACT ELEVATION DETERMINED DURING CONSTRUCTION.
2. LIC-F100 RELAY CONTACTS ARE USED TO AUTOMATICALLY START THE PUMPS IN LOCAL MODE. REFER TO DRAWING 1-0118F-A0012 FOR DETAILS.

ENGINEERS GEOSCIENTISTS MANITOBA
Certificate of Authorization
SNC-Lavalin Inc.
No. 4489

NO.	REVISIONS	DATE	DESIGN	CHECK
00	ISSUED FOR CONSTRUCTION, TENDER 167-2023	2023/03/02	MS	BC

SNC·LAVALIN

SNC-LAVALIN INC.
148 Nature Park Way
Winnipeg, MB, Canada R3P 0X7
204-786-8080

DESIGNED BY: M. SARIC	CHECKED BY: B. CLEVEN
DRAWN BY: M. SARIC	APPROVED BY: B. CLEVEN
SCALE: N.T.S.	DATE: 2022/07/06
ISSUED FOR CONSTRUCTION BY: K. ZUREK	DATE: 2023/03/02
CONSULTANT NO.:	

ENGINEER'S SEAL

PROVINCE OF MANITOBA
M. SARIC
Member
46571
REGISTERED PROFESSIONAL ENGINEER
2023-03-02

REV 00

Winnipeg

THE CITY OF WINNIPEG
WATER AND WASTE DEPARTMENT

BANNATYNE FLOOD PUMPING STATION
2023 UPGRADES
LOOP DIAGRAM
WET WELL LEVEL TRANSMITTER
LIC-F100, LE-F100, YAF-F100 AND LSH-F100

CITY DRAWING NUMBER	SHEET	REV.	SIZE
1-0118F-A0016	001	00	B