B SIZE – 279mm x 432mm
LAST SAVE: 2023/03/02 – 4:24pm
PATH: \\Winpdc1\proj$\691232\4ENG\48IC\DD – General DWG\1-0118F-A0026-001_Rev00.dwg

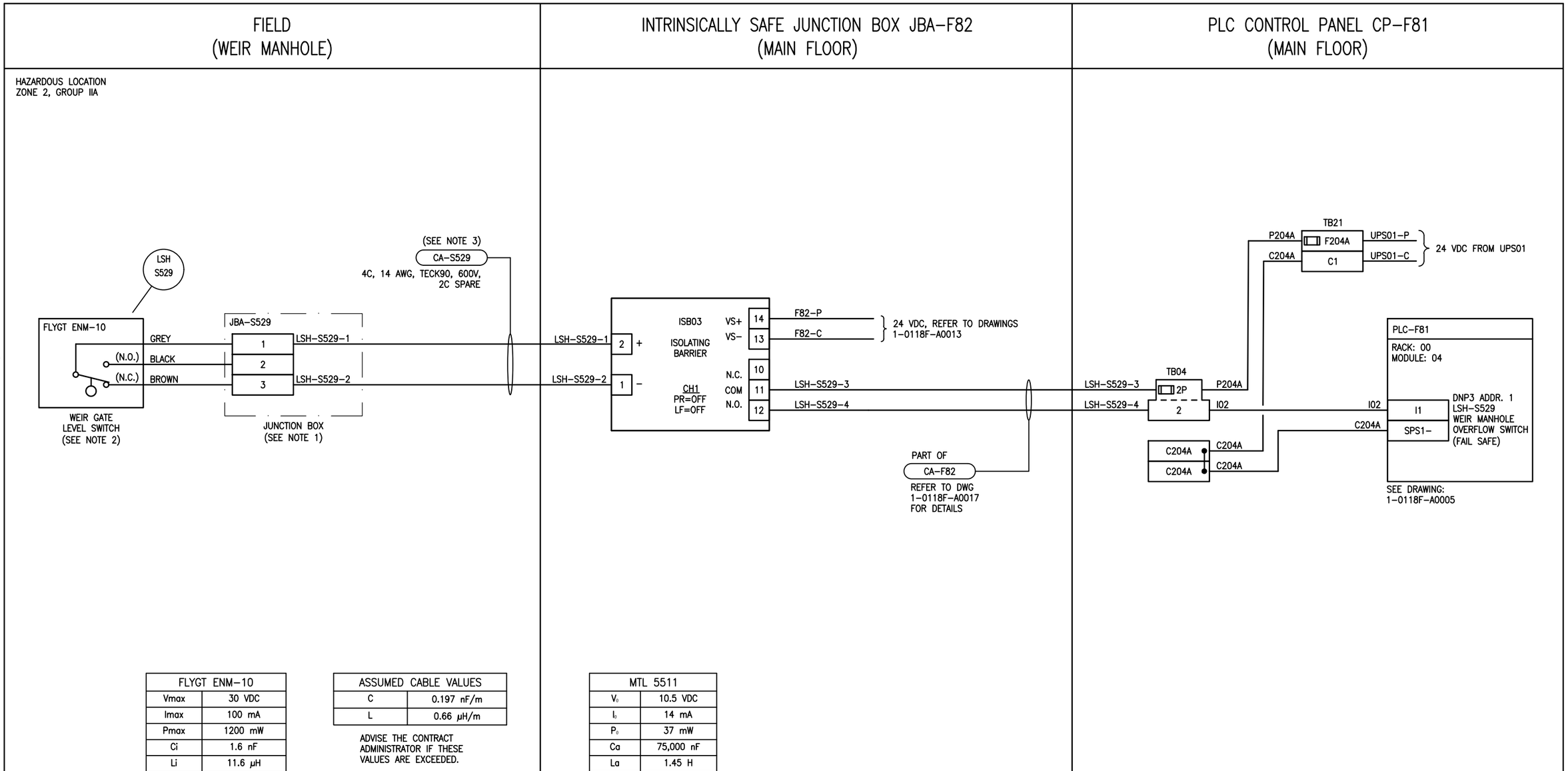

FLYGT ENM-10	
Vmax	30 VDC
Imax	100 mA
Pmax	1200 mW
Ci	1.6 nF
Li	11.6 µH

ASSUMED CABLE VALUES	
C	0.197 nF/m
L	0.66 µH/m

ADVISE THE CONTRACT ADMINISTRATOR IF THESE VALUES ARE EXCEEDED.

MTL 5511	
V_0	10.5 VDC
I_0	14 mA
P_0	37 mW
Ca	75,000 nF
La	1.45 H

NOTES:

1. PROVIDED AND INSTALLED NEW NEMA TYPE 4X JUNCTION BOX WITH TERMINALS AND IDENTIFICATION LAMACOID.
2. EXACT ELEVATION TO BE DETERMINED DURING CONSTRUCTION. SEE DRAWINGS M006 FOR LOCATION OF MANHOLE.
3. CABLING BETWEEN WEIR MANHOLE AND FLOOD STATION SHALL BE ROUTED THROUGH EXISTING BURIED 300mm PVC SERVICE DUCTS RUNNING THROUGH MANHOLE #1 AND MANHOLE #3. REFER TO ISOMETRIC DRAWING M006 FOR REFERENCE.

ENGINEERS GEOSCIENTISTS MANITOBA
Certificate of Authorization
SNC-Lavalin Inc.
No. 4489

NO.	REVISIONS	DATE	DESIGN	CHECK
00	ISSUED FOR CONSTRUCTION, TENDER 167-2023	2023/03/02	MS	BC

SNC·LAVALIN

SNC-LAVALIN INC.
148 Nature Park Way
Winnipeg, MB, Canada R3P 0X7
204-786-8080

DESIGNED BY: M. SARIC	CHECKED BY: B. CLEVEN
DRAWN BY: M. SARIC	APPROVED BY: B. CLEVEN
SCALE: N.T.S.	DATE: 2022/07/06
ISSUED FOR CONSTRUCTION BY: K. ZUREK	DATE: 2023/03/02
CONSULTANT NO.:	

ENGINEER'S SEAL

PROVINCE OF MANITOBA
M. SARIC
Member
46571
REGISTERED PROFESSIONAL ENGINEER

REV. 00
2023-03-02

Winnipeg

THE CITY OF WINNIPEG
WATER AND WASTE DEPARTMENT

BANNATYNE FLOOD PUMPING STATION
2023 UPGRADES
LOOP DIAGRAM
WEIR MANHOLE OVERFLOW SWITCH
LSH-S529

CITY DRAWING NUMBER	SHEET	REV.	SIZE
1-0118F-A0026	001	00	B