B SIZE – 279mm x 432mm

LAST SAVE: 2023/03/02 – 4:25pm
PATH: \\Winpdc1\proj$\691232\4ENG\48IC\DD – General DWG\1-0118F-A0027-001_Rev00.dwg

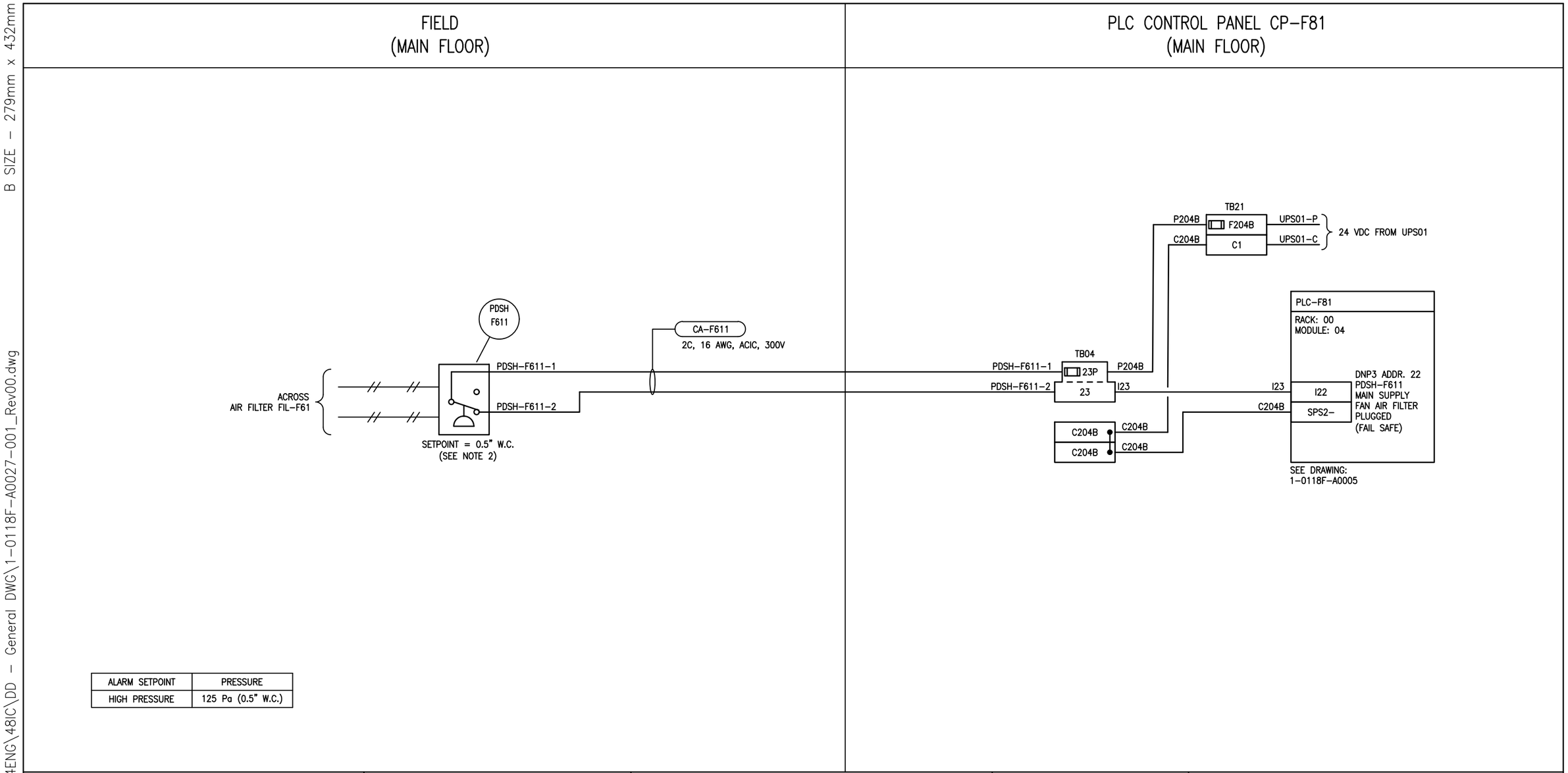

ALARM SETPOINT	PRESSURE
HIGH PRESSURE	125 Pa (0.5" W.C.)

NOTES:

1. PROVIDED AND INSTALLED NEW DIFFERENTIAL PRESSURE SWITCH.
2. PRESSURE SWITCH CONTACT TO BE CLOSED WHEN FILTER IS NOT PLUGGED, AND OPENED WHEN FILTER IS PLUGGED.

ENGINEERS GEOSCIENTISTS MANITOBA
Certificate of Authorization
SNC-Lavalin Inc.
No. 4489

NO.	REVISIONS	DATE	DESIGN	CHECK
00	ISSUED FOR CONSTRUCTION, TENDER 167-2023	2023/03/02	MS	BC

SNC·LAVALIN

SNC-LAVALIN INC.
148 Nature Park Way
Winnipeg, MB, Canada R3P 0X7
204-786-8080

DESIGNED BY: M. SARIC	CHECKED BY: B. CLEVEN
DRAWN BY: M. SARIC	APPROVED BY: B. CLEVEN
SCALE: N.T.S.	DATE: 2022/07/06
ISSUED FOR CONSTRUCTION BY: K. ZUREK	DATE: 2023/03/02
CONSULTANT NO.:	

ENGINEER'S SEAL

PROVINCE OF MANITOBA
M. SARIC
Member
46571
REGISTERED PROFESSIONAL ENGINEER
2023-03-02

REV 00

Winnipeg

THE CITY OF WINNIPEG
WATER AND WASTE DEPARTMENT

BANNATYNE FLOOD PUMPING STATION
2023 UPGRADES
LOOP DIAGRAM
MAIN SUPPLY FAN AIR FILTER PLUGGED SWITCH
PDSH-F611

CITY DRAWING NUMBER	SHEET	REV.	SIZE
1-0118F-A0027	001	00	B