A1 SIZE – 594mm x 841mm

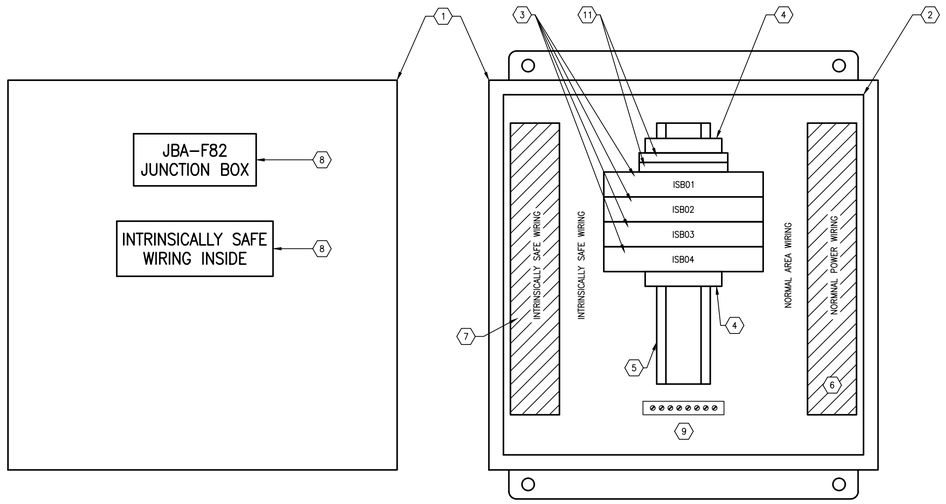

EXTERIOR PANEL VIEW
SCALE: 1 : 2

INTERIOR PANEL VIEW
SCALE: 1 : 2

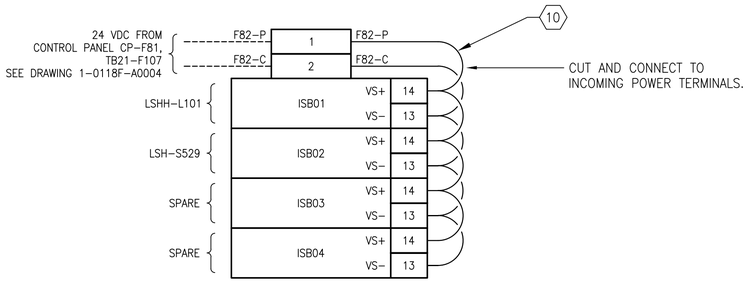

DETAIL: POWER BUS CONNECTION
SCALE: N.T.S.

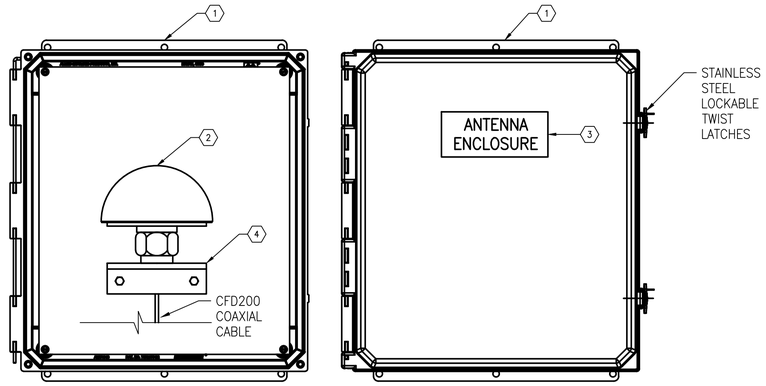

INTERIOR PANEL VIEW
SCALE: 1:4

EXTERIOR PANEL VIEW
SCALE: 1:4

INTRINSICALLY SAFE JUNCTION BOX – BILL OF MATERIAL

ITEM	QTY	DESCRIPTION	MANUFACTURER	CATALOG NUMBER
1	1	JUNCTION BOX, NEMA 12, CONTINUOUS–HINGE, 254x254x152mm	HOFFMAN	A10106CH
2	1	BACKPAN	HOFFMAN	A10P10
3	4	INTRINSICALLY SAFE ISOLATING BARRIER, DIGITAL INPUT, 2 CHANNEL	MTL	MTL5511
4	2	TERMINAL END CLAMP	PHOENIX CONTACT	1201442
5	AS REQ'D	35mm DIN RAIL	PHOENIX CONTACT	0801733
6	AS REQ'D	NARROW SLOT WIRING DUCT, 1.25" x 2.12", GREY	PANDUIT	F1X2LG6
7	AS REQ'D	NARROW SLOT WIRING DUCT, 1.25" x 2.12", BLUE	PANDUIT	F1X2IB6
8	AS REQ'D	LAMACOID, 5mm HIGH BLACK TEXT ON WHITE BACKGROUND	–	–
9	1	GROUND BAR, 6 TAP	ILSCO	D167–6
10	1	POWER BUS KIT	MTL	PB–8T
11	2	FEED THROUGH TERMINALS	PHOENIX CONTACT	3046184

ANTENNA ENCLOSURE – BILL OF MATERIAL

ITEM	QTY	DESCRIPTION	MANUFACTURER	CATALOG NUMBER
1	1	N4X SOLID DOOR TWIST LOCKABLE LATCH W/FEET, FIBERGLASS, 408mm x 362mm x 207mm INNER FIBREGLASS MOUNTING PANEL	HAMMOND	PJU16148TF 14F1513
2	1	CELLULAR ANTENNA	RED LION	ANT–MA741ABI001
3	1	LAMACOID, 5mm HIGH BLACK TEXT ON WHITE BACKGROUND, UV RESISTANT	AS REQ.	–
4	1	L–BRACKET MOUNTING PLATE	AS REQ.	–

NOTES

1. LABELLED WIREWAY COVERS AND ENCLOSURE BACKPAN AS SHOWN.
2. PROVIDED IDENTIFICATION OF ISOLATORS WITHIN JBA–F82 BY MEANS OF A COMPUTER GENERATED ADHESIVE LABEL.

NOTES

1. DIMENSIONS FOR ANTENNA MOUNTING ACCESSORIES ARE ASSUMED.

METRIC
WHOLE NUMBERS INDICATE MILLIMETRES
DECIMALIZED NUMBERS INDICATE METRES
50 0 50 100mm
1 : 2

METRIC
WHOLE NUMBERS INDICATE MILLIMETRES
DECIMALIZED NUMBERS INDICATE METRES
100 0 100 200
1 : 4

DRAWING NUMBER	REFERENCE DRAWINGS
1–0118F–A0026	LOOP DIAGRAM, WEIR MANHOLE OVERFLOW SWITCH LSH–S529
1–0118F–A0017	LOOP DIAGRAM, WET WELL LEVEL SWITCH LSHH–F101
1–0118F–A0004	POWER DISTRIBUTION SCHEMATIC PLC CONTROL PANEL CP–F81
1–0118F–A0001	MAIN FLOOR AND DRY WELL AREA

ENGINEERS GEOSCIENTISTS MANITOBA
Certificate of Authorization
SNC-Lavalin Inc.
No. 4489

NO.	REVISIONS	DATE	DESIGN	CHECK
00	ISSUED FOR CONSTRUCTION, TENDER 167–2023	2023/03/02	MS	BC

SNC·LAVALIN
SNC–LAVALIN INC.
148 Nature Park Way
Winnipeg, MB, Canada R3P 0X7
204–786–8080

DESIGNED BY: M. SARIC	CHECKED BY: B. CLEVEN
DRAWN BY: M. SARIC	APPROVED BY: B. CLEVEN
SCALE: AS NOTED	ISSUED FOR CONSTRUCTION BY: K. ZUREK
DATE: 2022/07/06	DATE: 2023/03/02
CONSULTANT NO.:	

ENGINEER'S SEAL
PROVINCE OF MANITOBA
M. SARIC
Member
46571
REGISTERED PROFESSIONAL ENGINEER
2023-03-02

REV. 00

Winnipeg
THE CITY OF WINNIPEG
WATER AND WASTE DEPARTMENT

BANNATYNE FLOOD PUMPING STATION
2023 UPGRADES
PANEL LAYOUT & BILL OF MATERIAL
JBA–F82, ANTENNA ENCLOSURE

CITY DRAWING NUMBER	SHEET	REV.	SIZE
1–0118F–A0013	001	00	A1

LAST SAVE: 2023/03/02 – 4:15pm
PATH: \\Winpdc1\proj$\691232\4ENG\48IC\DD – General DWG\1–0118F–A0013–001_Rev00.dwg