A1 SIZE – 594mm x 841mm

NOTE:

1. SEE DRAWING 1–0118F–S0002 FOR GENERAL AND STRUCTURAL NOTES.

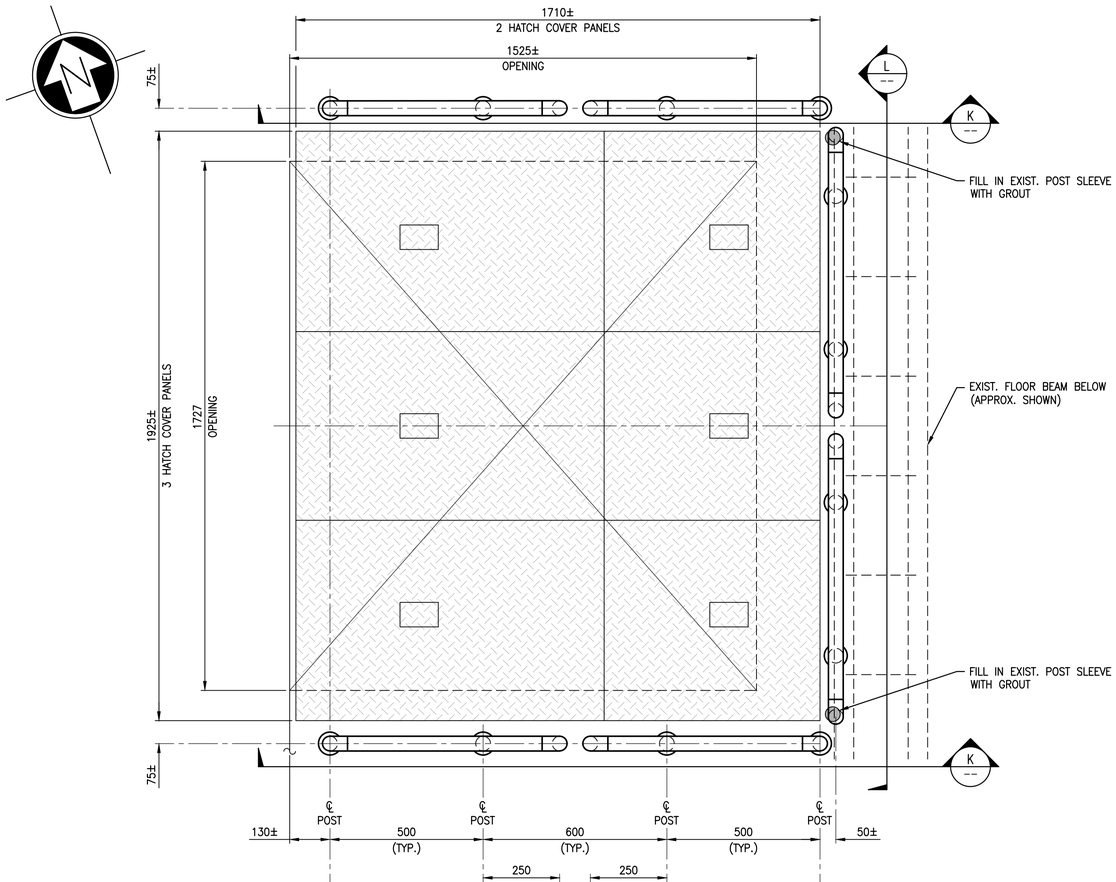

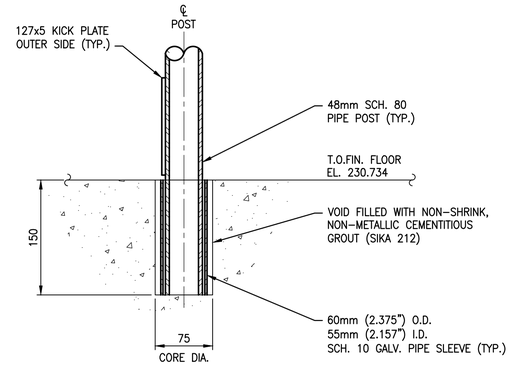

DETAIL – POST SLEEVE

SCALE: 1 : 4

NOTE: TAKE CARE TO NOT DAMAGE EXIST. CONCRETE REINFORCING WHEN INSTALLING GUARDRAIL SUPPORTS. REFER TO NOTES ON DRAWING 1–0173F–S0002 FOR INSTALLATION PROCEDURE.

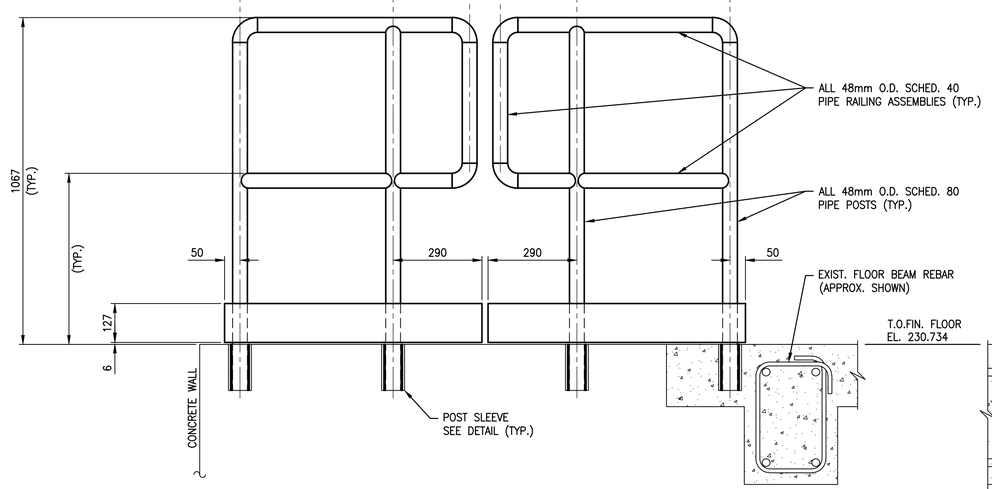

K — ELEVATION

SCALE: 1 : 10

4 ASSEMBLIES REQUIRED

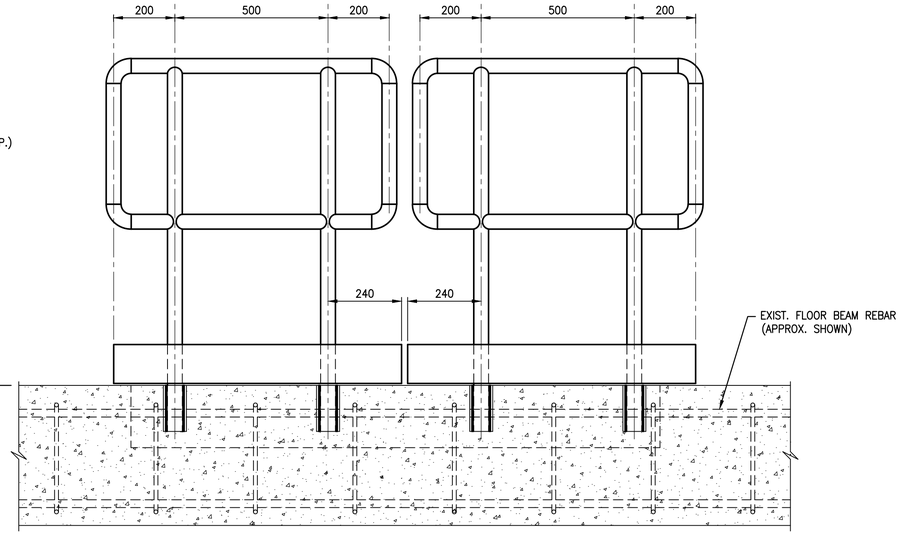

5 S0002 — DETAIL – HATCH REMOVABLE GUARDRAIL ASSEMBLIES

SCALE: 1 : 10

L — ELEVATION

SCALE: 1 : 10

2 ASSEMBLIES REQUIRED

DRAWING NUMBER	REFERENCE DRAWINGS
LD–5050	BANNATYNE PUMPING STATION – ARCHITECTURAL BUILDING SECTION
LD–5049	BANNATYNE PUMPING STATION – ARCHITECTURAL ELEVATIONS
LD–5048	BANNATYNE PUMPING STATION – ARCHITECTURAL PLANS, PLAN DETAILS & SCHEDULES
5–SD–10–1	BANNATYNE AVE. PUMPING STATION
5–SD–10	BANNATYNE AVE. PUMPING STATION

METRIC

WHOLE NUMBERS INDICATE MILLIMETRES
DECIMALIZED NUMBERS INDICATE METRES

100 0 100 200

1 : 4

0.25 0 0.25 0.5m

1 : 10

ENGINEERS GEOSCIENTISTS MANITOBA
Certificate of Authorization
SNC-Lavalin Inc.
No. 4489

NO.	REVISIONS	DATE	DESIGN	CHECK
00	ISSUED FOR CONSTRUCTION, TENDER 167–2023	2023/02/23	K.K.	D.S.

SNC·LAVALIN

SNC–LAVALIN INC.
148 Nature Park Way
Winnipeg, MB, Canada R3P 0X7
204–786–8080

DESIGNED BY: K. KOTYK	CHECKED BY: D. SIDHU
DRAWN BY: B. DICKSON	APPROVED BY: B. CLEVEN
SCALE: AS SHOWN	ISSUED FOR CONSTRUCTION BY: K. ZUREK
DATE: 2022/12/10	DATE: 2023/02/23
CONSULTANT NO.:	

ENGINEER'S SEAL

PROVINCE OF MANITOBA
K. K. KOTYK
Member
21950
REGISTERED PROFESSIONAL ENGINEER

2023-02-24 REV. 00

Winnipeg

THE CITY OF WINNIPEG
WATER AND WASTE DEPARTMENT

BANNATYNE FLOOD PUMPING STATION
2023 UPGRADES
MAIN FLOOR
HATCH GUARDRAILS
PLAN, ELEVATIONS AND DETAILS

CITY DRAWING NUMBER	SHEET	REV.	SIZE
1–0118F–S0005	001	00	A1

1–0118F–S0005–001–00.dwg

LAST SAVE: 2023/02/24 – 1:16pm
PATH: M:\691232\4ENG\42STR\DD – General DWG\1–0118F–S0005–001–00.dwg