A1 SIZE – 594mm x 841mm

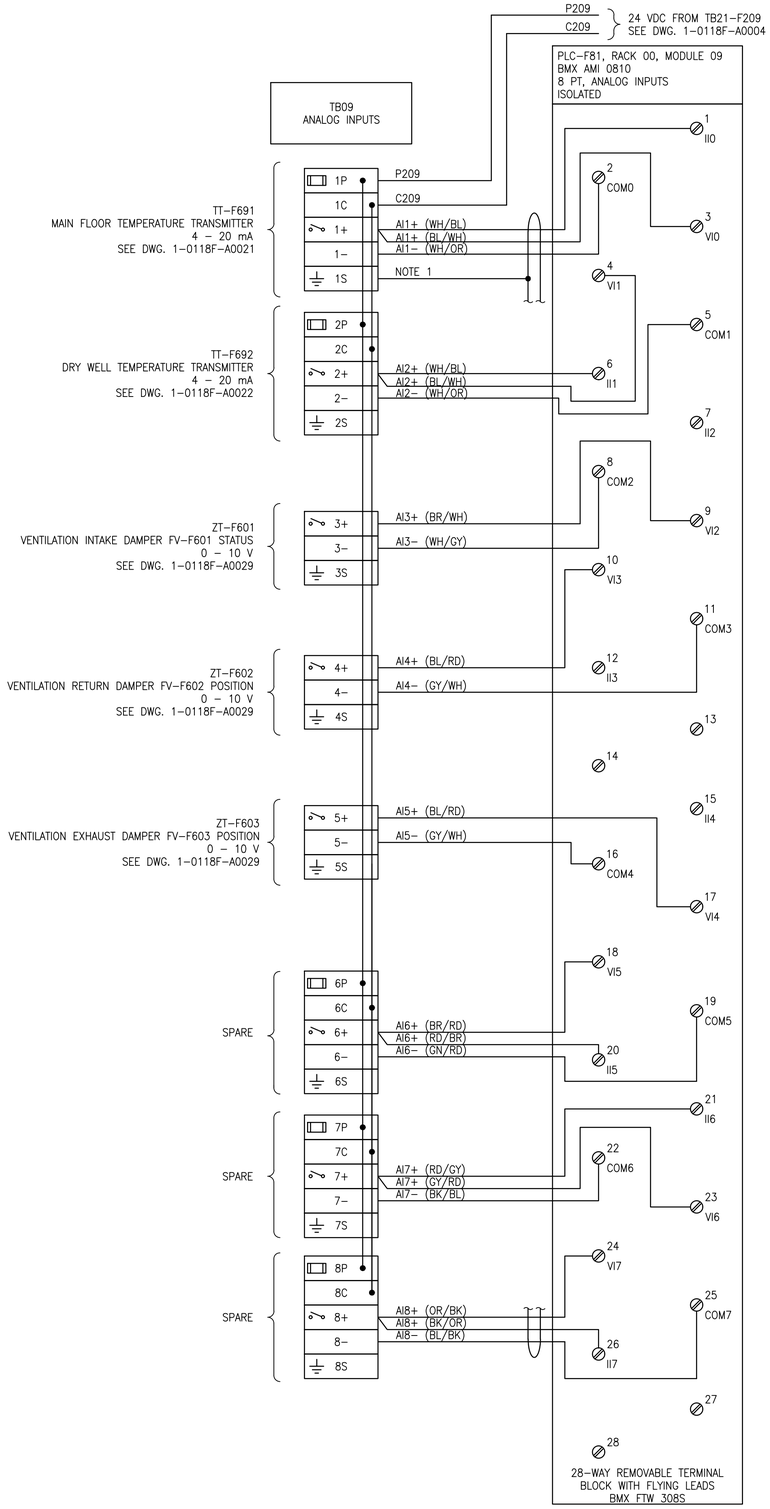

FUSE SCHEDULE

TB	IDENTIFIER	SIZE	RATED CURRENT (A) FA
TB09	1P	5x20mm	0.1
	2P	5x20mm	0.1
	6P	5x20mm	0.1
	7P	5x20mm	0.1
	8P	5x20mm	0.1

GENERAL NOTES:

1. CONNECT FLYING LEADS CABLE OVERALL SHIELD TO TERMINAL 1S.

DRAWING NUMBER	REFERENCE DRAWINGS
1-0118F-A0004	POWER DISTRIBUTION SCHEMATIC PLC CONTROL PANEL CP-F81
1-0118F-A0002	PANEL LAYOUT & BILL OF MATERIALS PLC CONTROL PANEL CP-F81

ENGINEERS GEOSCIENTISTS MANITOBA
Certificate of Authorization
SNC-Lavalin Inc.
No. 4489

NO.	REVISIONS	DATE	DESIGN	CHECK
00	ISSUED FOR CONSTRUCTION, TENDER 167-2023	2023/03/02	MS	BC

SNC·LAVALIN

SNC-LAVALIN INC.
148 Nature Park Way
Winnipeg, MB, Canada R3P 0X7
204-786-8080

DESIGNED BY: M. SARIC	CHECKED BY: B. CLEVEN
DRAWN BY: M. SARIC	APPROVED BY: B. CLEVEN
SCALE: N.T.S	ISSUED FOR CONSTRUCTION BY: K. ZUREK
DATE: 2022/07/06	DATE: 2023/03/02
CONSULTANT NO.:	

ENGINEER'S SEAL

PROVINCE OF MANITOBA
M. SARIC
Member
46571
REGISTERED PROFESSIONAL ENGINEER
2023-03-02

REV. 00

Winnipeg
THE CITY OF WINNIPEG
WATER AND WASTE DEPARTMENT

BANNATYNE FLOOD PUMPING STATION
2023 UPGRADES
PLC I/O WIRING DIAGRAM
PLC CONTROL PANEL CP-F81
ANALOG INPUTS RACK 00, MODULE 09

CITY DRAWING NUMBER	SHEET	REV.	SIZE
1-0118F-A0009	001	00	A1

LAST SAVE: 2023/03/02 – 4:13pm
PATH: \\Winpdc1\proj$\691232\4ENG\48IC\DD – General DWG\1-0118F-A0009-001_Rev00.dwg