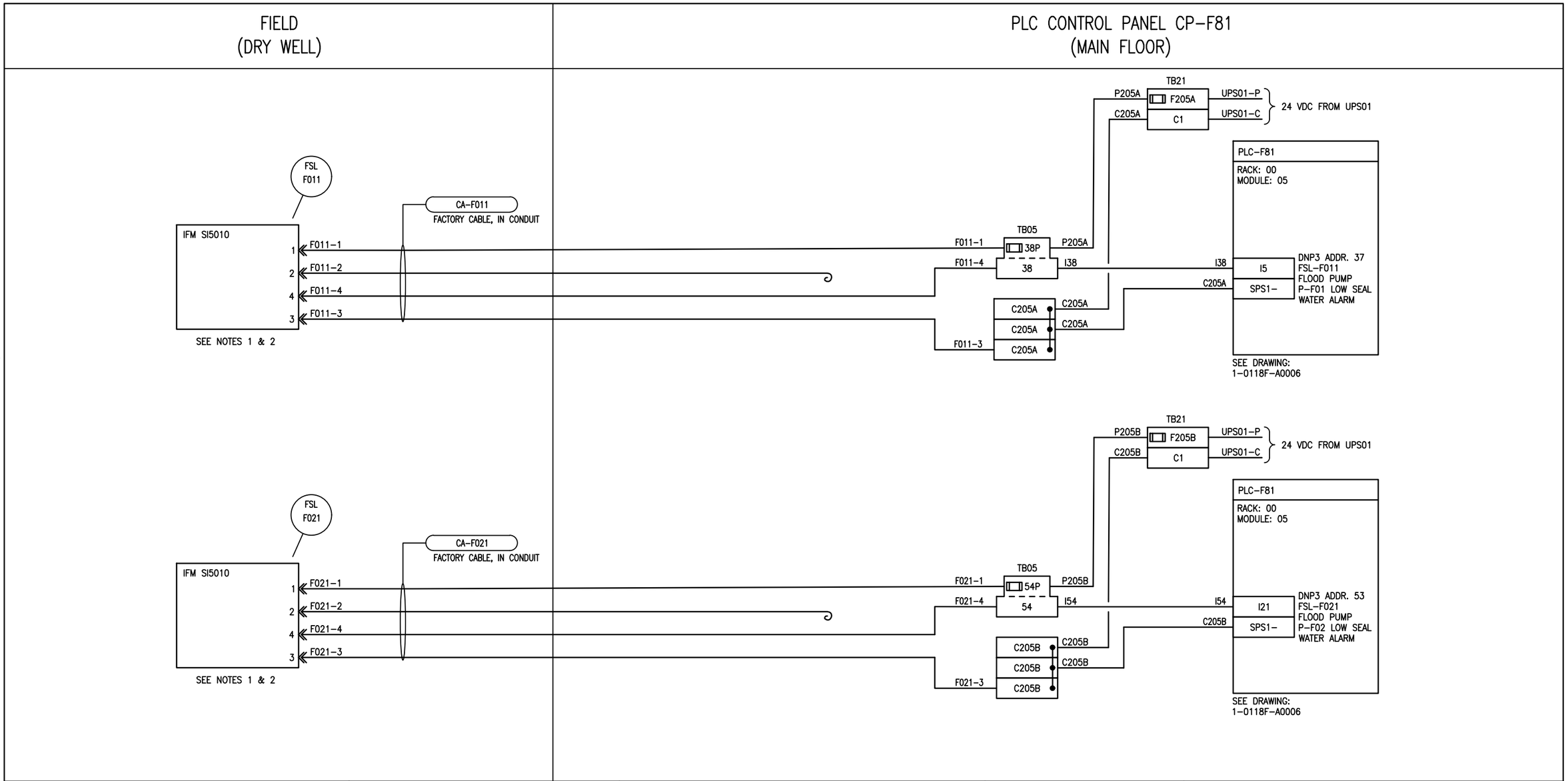

NOTES:

1. SOFTWARE INTEGRATOR TO SET AN 8 SECOND SOFTWARE DELAY WITHIN THE PLC WHEN LOW FLOW HAS BEEN DETECTED.
2. FLOW SWITCH OUTPUT (PIN 4) IS OFF WHEN NO FLOW IS PRESENT AND ON WHEN FLOW IS PRESENT.
2. FOR P-F01, SEE DRAWING 1-0118F-E0013 AND 1-0118F-E0014 FOR SEAL WATER SOLENOID SCHEMATIC AND CONNECTION DIAGRAM.
3. FOR P-F02, SEE DRAWING 1-0118F-E0015 AND 1-0118F-E0016 FOR SEAL WATER SOLENOID SCHEMATIC AND CONNECTION DIAGRAM.

ENGINEERS GEOSCIENTISTS MANITOBA
Certificate of Authorization
SNC-Lavalin Inc.
No. 4489

SNC·LAVALIN

SNC-LAVALIN INC.
148 Nature Park Way
Winnipeg, MB, Canada R3P 0X7
204-786-8080

NO.	REVISIONS	DATE	DESIGN	CHECK
00	ISSUED FOR CONSTRUCTION, TENDER 167-2023	2023/03/02	MS	BC

DESIGNED BY: M. SARIC	CHECKED BY: B. CLEVEN
DRAWN BY: M. SARIC	APPROVED BY: B. CLEVEN
SCALE: N.T.S.	DATE: 2022/11/24
ISSUED FOR CONSTRUCTION BY: K. ZUREK	DATE: 2023/03/02
CONSULTANT NO.:	

ENGINEER'S SEAL

PROVINCE OF MANITOBA
M. SARIC
Member
46571
REGISTERED PROFESSIONAL ENGINEER

REV. 00
2023-03-02

Winnipeg

THE CITY OF WINNIPEG
WATER AND WASTE DEPARTMENT

BANNATYNE FLOOD PUMPING STATION
2023 UPGRADES
LOOP DIAGRAM
P-F01 AND P-F02 LOW SEAL WATER ALARM
FSL-F011, FSL-F021

CITY DRAWING NUMBER	SHEET	REV.	SIZE
1-0118F-A0030	001	00	B

B SIZE - 279mm x 432mm

LAST SAVE: 2023/03/02 - 4:26pm
PATH: \\Winpdc1\proj$\691232\4ENG\48IC\DD - General DWG\1-0118F-A0030-001_Rev00.dwg