A1 SIZE – 594mm x 841mm

PANEL ID:	AMPS:	VOLTS:	PHASE:	WIRE:		
PNL–F73	100A	120/240V	1ø	3W	SURF. MOUNT [X] FLUSH MOUNT [ ]	TOP FED [ ] BOT. FED [X]

DESCRIPTION:	120/240V DISTRIBUTION PANELBOARD	LOCATION:	MAIN FLOOR
MFG / MODEL:	SQUARE D NF	INTERRUPTING RATING:	14 kA
MAIN BREAKER:	100A	INST. SETTINGS:	N/A

CCT.	DESCRIPTION	NOTE	WIRE (AWG)	BRKR AMPS	LOAD (VA)	L1 / L2	LOAD (VA)	BRKR AMPS	WIRE (AWG)	NOTE	DESCRIPTION	CCT.
1	INTERIOR LIGHTING		12	15	1042		350	15	12		CONTROL PANEL CP–F81	2
3	PHOTOCELL JUNCTION BOX, OUTDOOR LIGHTING		12	15	120		200	15	12		HVAC PANEL JBA–F83	4
5	EMERGENCY LIGHTING BATTERY BANK		12	15	100		800	15	12	GFCI	SUMP PUMP RECEPTACLE	6
7	MAIN FLOOR RECEPTACLES		12	15	360		360	15	12	GFCI	DRY WELL RECEPTACLES	8
9	MAIN FLOOR RECEPTACLES		12	15	360		360	15	12	GFCI	DRY WELL RECEPTACLES	10
11	COMBINED SEWER OVERFLOW (CSO) PANEL		12	15	150		480	20	12	GFCI	OUTDOOR RECEPTACLES	12
13	SPARE			15				15			SPARE	14
15	SPARE			15				15			SPARE	16
17	SPARE			15				15			SPARE	18
19	SPARE			15				15			SPARE	20
21	SPARE			15				15			SPARE	22
23	SPARE			15				15			SPARE	24
25	SPARE			15				15			SPARE	26
27	SPACE										SPACE	28
29	SPACE										SPACE	30
31	SPACE										SPACE	32
33	SPACE										SPACE	34
35	SPACE										SPACE	36
37	SPACE										SPACE	38
39	SPACE										SPACE	40
41	SPACE										SPACE	42

TOTAL CONNECTED LOAD: 4.282 KVA — LINE 1: 2.132 kVA 17.76 A — LINE 2: 2.550 kVA 17.92 A

NOTE LEGEND:
AFCI ARC FAULT CIRCUIT INTERRUPTOR
GFCI GROUND FAULT CIRCUIT INTERRUPTOR
LOCK LOCKED BREAKER

NOTES:
1. ALL BREAKERS ARE SINGLE–POLE UNLESS OTHERWISE IDENTIFIED.

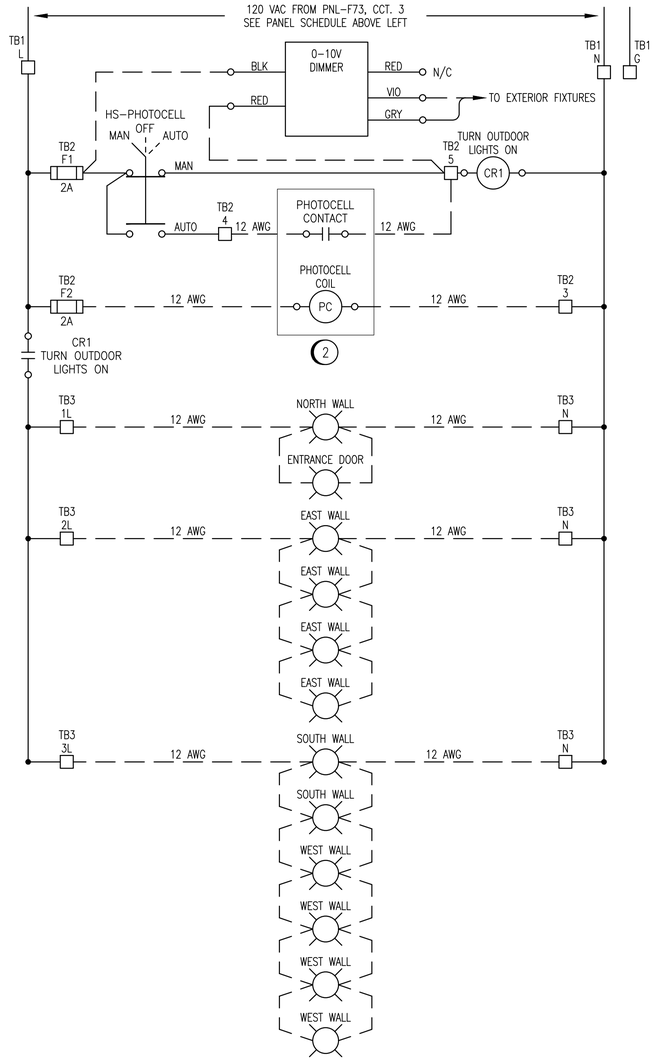

LIGHTING CONTROL JUNCTION BOX
PHOTOCELL LIGHTING SCHEMATIC

GENERAL NOTES:

1. ALL EQUIPMENT AND CABLING IS NEW UNLESS OTHERWISE INDICATED AS EXISTING.
2. PROVIDE A TYPE WRITTEN PANEL DIRECTORY.

SPECIFIC NOTES:

1. PROVIDE AND INSTALL PHOTOCELL JUNCTION BOX COMPLETE WITH RELAYS, HAND–OFF–AUTO SWITCH, AND TERMINAL BLOCKS AS SHOWN. HAND–OFF–AUTO SWITCH TO BE MOUNTED ON JUNCTION BOX DOOR. ALL INTERNAL AND EXTERNAL WIRING IS TO BE #12 AWG AND INSTALLED AS PER SCHEMATIC DIAGRAM SHOWN.
2. PROVIDE AND INSTALL NEW OUTDOOR PHOTOCELL. RUN 4C #12 AWG RW90 IN 21mm CONDUIT TO CONNECT PHOTOCELL TO PHOTOCELL JUNCTION BOX.

LIGHTING CONTROL JUNCTION BOX MATERIAL LIST (1) (2)

ITEM	QTY	DESCRIPTION	MANUFACTURER	CATALOG NUMBER
1	1	SINGLE–DOOR TYPE 4 WALL–MOUNTED ENCLOSURE C/W BACKPAN	HOFFMAN	A1212CHNF, A12P12
2	1	3–POSITION SELECTOR SWITCH	SCHNEIDER	9001KS43B, 9001KA1
3	1	35mm DIN RAIL	PHOENIX CONTACT	0801733
4	AS REQ'D	FEED–THROUGH TERMINAL	PHOENIX CONTACT	3046184
5	AS REQ'D	FUSED TERMINAL	PHOENIX CONTACT	3046142
6	AS REQ'D	FUSE CONNECTOR	PHOENIX CONTACT	3036806
7	AS REQ'D	POTENTIAL EARTH TERMINAL	PHOENIX CONTACT	3046207
8	AS REQ'D	TERMINAL END PLATE	PHOENIX CONTACT	3047141
9	AS REQ'D	TERMINAL END CLAMP	PHOENIX CONTACT	1201442
10	AS REQ'D	PLUG–IN BRIDGE	PHOENIX CONTACT	3030365
11	AS REQ'D	TERMINAL BLOCK MARKER	PHOENIX CONTACT	1004348
12	AS REQ'D	RELAY, 120 VAC, SPDT, LED	OMRON	G2R–1–SN–AC120(S)
13	1	RELAY BASE, SPDT	OMRON	P2RF–05
14	1	0–10V DIMMER (MOUNTED EXTERNALLY)	LEVITON	IP710
15	1	LAMACOID, WHITE PLATE WITH BLACK TEXT	–	–

LUMINAIRE SCHEDULE

TYPE	MANUFACTURER	MODEL	LAMPS QTY	LAMPS TYPE	VOLTS	LOAD VA	MOUNTING	NOTE
A	METALUX	4VT2–LD5–8–DR–UNV–L840–CD 1–WL–U	10	LED, 58W	120	58	AN	
E.X.	EATON CROUSE–HINDS	EVLEDBX2C701	10	LED, 43W	120	43	W	
EA	READY–LITE	NMMP–2–LD7	4	LED, 8W	12	8	W	1
W.P.	GARDCO	101L–16L–200–WW–G2–3–120 DD–BK	10	LED, 12W	120	12	AN	

MOUNTING LEGEND:
CH CHAIN HUNG — R RECESSED
CS CEILING SURFACE — W WALL
P PENDANT — TRC THREADED ROD AND CHANNEL
AN AS NOTED ON DRAWINGS

NOTES:
1. USE 12 AWG RW90 IN 21mm CONDUIT.

PHOTOCELL MATERIAL LIST

ITEM	QTY	DESCRIPTION	MANUFACTURER	CATALOG NUMBER
1	1	OUTDOOR PHOTOCELL	PRECISION	ST–15 SERIES

EMERGENCY LIGHTING BATTERY SCHEDULE

ID	MANUFACTURER	MODEL	INPUT VOLTS	INPUT VA	OUTPUT VOLTS	INTERNAL LAMPS QTY	INTERNAL LAMPS TYPE	REMOTE FIXTURES QTY	REMOTE FIXTURES TOTAL REMOTE LOAD (W)	TOTAL LOAD (W)	DESIGN TIME	NOTE
ELB–F75	READY–LITE	LDX12–108NM2LD7	120	30	12	2	LED, 4W	4	32	40	>60 MIN.	1

NOTES: 1. BATTERY RATED FOR 30 MIN. @ 108W.

ENGINEERS GEOSCIENTISTS MANITOBA
Certificate of Authorization
SNC-Lavalin Inc.
No. 4489

DRAWING NUMBER	REFERENCE DRAWINGS
1–0118F–E0006	ELECTRICAL PLAN LAYOUT MAIN FLOOR AND EXTERIOR
1–0118F–E0005	ELECTRICAL SINGLE LINE DIAGRAM

NO.	REVISIONS	DATE	DESIGN	CHECK
00	ISSUED FOR CONSTRUCTION, TENDER 167–2023	2023/03/02	MS	BC

SNC·LAVALIN
SNC–LAVALIN INC.
148 Nature Park Way
Winnipeg, MB, Canada R3P 0X7
204–786–8080

DESIGNED BY: N. ESCHUK	CHECKED BY: B. CLEVEN
DRAWN BY: B. WILKS	APPROVED BY: B. CLEVEN
SCALE: N.T.S.	ISSUED FOR CONSTRUCTION BY: K. ZUREK
DATE: 2022/06/29	DATE: 2023/03/02
CONSULTANT NO.:	

ENGINEER'S SEAL
PROVINCE OF MANITOBA — M. SARTO — Member 46571 — REGISTERED PROFESSIONAL ENGINEER — 2023-03-02
REV. 00

Winnipeg
THE CITY OF WINNIPEG
WATER AND WASTE DEPARTMENT

BANNATYNE FLOOD PUMPING STATION
2023 UPGRADES
ELECTRICAL SCHEDULES
PANEL PNL–F73, LUMINAIRE
AND EMERGENCY LIGHTING

CITY DRAWING NUMBER	SHEET	REV.	SIZE
1–0118F–E0012	001	00	A1

1–0118F–E0012–001_Rev00.dwg

LAST SAVE: 2023/03/02 – 3:59pm
PATH: \\Winpdc1\proj$\691232\4ENG\47ELE\DD – General DWG\1–0118F–E0012–001_Rev00.dwg