A1 SIZE – 594mm x 841mm

GENERAL NOTES

1. DRAWING INFORMATION BASED ON HISTORICAL DRAWINGS AND SITE INVESTIGATIONS.
2. COORDINATE WITH DIVISION 26 WHERE EQUIPMENT THAT REQUIRES NEW ELECTRICAL IS INSTALLED.

LEGEND:

- EXISTING EQUIPMENT TO REMAIN
- NEW WORK
- (M) MOTORIZED DAMPER

CONSTRUCTION NOTES:

1. SUPPLY AND INSTALL NEW SUMP PUMP, PIPING, VALVES AND CHECK VALVES. CONNECT TO EXISTING WET WELL DISCHARGE. SEE PIPING SCHEMATIC AND PIPING ISOMETRIC ON DRAWING M0003 FOR DETAILS.
2. SUPPLY AND INSTALL SUPPLY FAN.
3. SUPPLY AND INSTALL NEW ELECTRIC DUCT HEATER C/W AIR PROVING SWITCH.
4. SUPPLY AND INSTALL NEW MOTORIZED DAMPERS.
5. SUPPLY AND INSTALL NEW DUCT WORK WITH 50mm EXTERIOR INSULATION AS SHOWN ON DRAWINGS. JACKETING AS PER SPECIFICATIONS.
6. SUPPLY AND INSTALL NEW FILTER SECTION.
7. SUPPLY AND INSTALL NEW WATER SERVICE SHUTOFF, WATER METER, VALVES, BACKFLOW PREVENTER, AIR GAP DRAIN TO SUMP PIT. INSTALL BELOW DUCTWORK. DO NOT OBSTRUCT ENTRANCEWAY. REFER TO PIPING SCHEMATIC AND PIPING ISOMETRIC ON DRAWING M0003 FOR DETAILS.
8. SUPPLY AND INSTALL SUPPLY AIR TEMPERATURE SENSOR AT BOTTOM OF DUCT.
9. SUPPLY AND INSTALL NEW AIR CONDITIONING UNIT. PROVIDE ROUGH OPENING 1405X2420MM. SEE STRUCTURAL DRAWINGS AND MANUFACTURER INSTRUCTIONS FOR FRAMING DETAILS, WALL MOUNT, AND DUCT PENETRATIONS. MAKE WEATHERTIGHT. PROVIDE UNISTRUT STAND FOR UNIT TO SUPPORT WEIGHT. DUCTWORK TO TRANSITION TO UNDERSIDE OF ROOF JOISTS.
10. SUPPLY AND INSTALL DIFFUSERS IN DUCTWORK. ADJUST BLADES TO DISTRIBUTE AIR TOWARDS MOTORS.

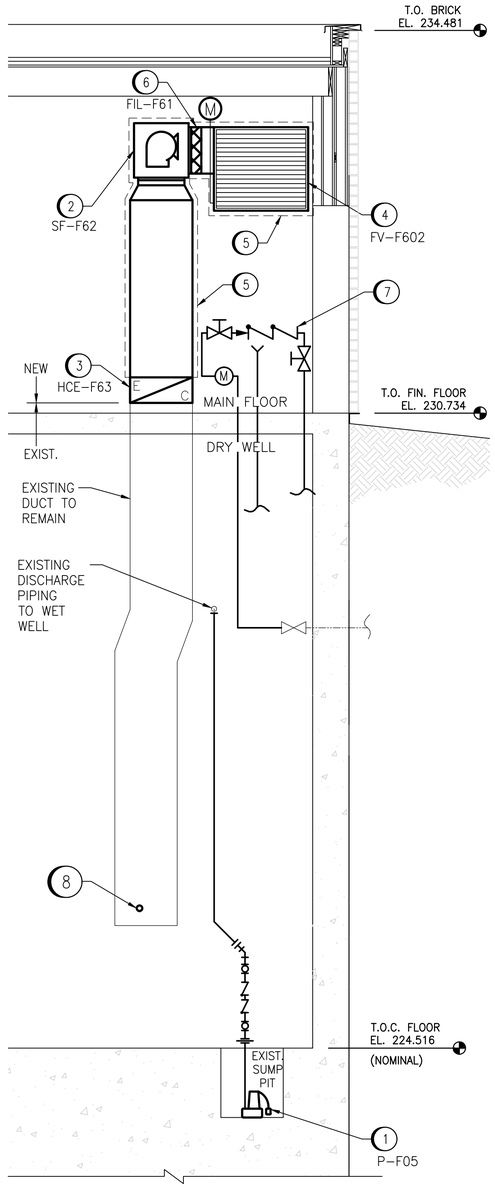

A M0002 PARTIAL SECTION
SCALE: N.T.S.

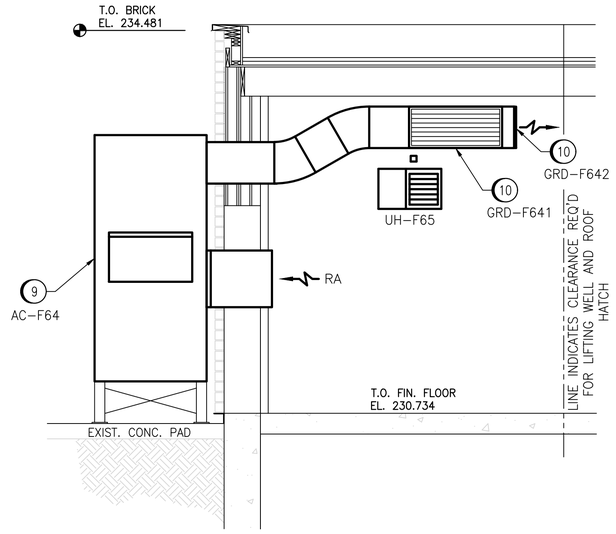

B M0002 PARTIAL SECTION
SCALE: N.T.S.

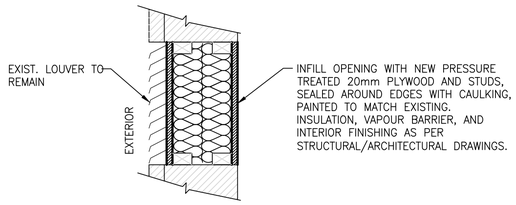

1 -- WALL CLOSURE DETAIL
SCALE: N.T.S.

DRAWING NUMBER	REFERENCE DRAWINGS
1–0118F–M0003	MECHANICAL SCHEDULES
1–0118F–M0002	MECHANICAL PLAN LAYOUT – MAIN FLOOR AND DRY WELL – NEW WORK
1–0118F–M0001	MECHANICAL PLAN LAYOUT – MAIN FLOOR AND DRY WELL– DEMOLITION
1–0118F–P0001	PROCESS AND INSTRUMENTATION DIAGRAM HVAC SYSTEM

METRIC
WHOLE NUMBERS INDICATE MILLIMETRES
DECIMALIZED NUMBERS INDICATE METRES
1m 0.5m 0 0.5m 1m 1.5m
1 : 30

ENGINEERS GEOSCIENTISTS MANITOBA
Certificate of Authorization
SNC-Lavalin Inc.
No. 4489

NO.	REVISIONS	DATE	DESIGN	CHECK
00	ISSUED FOR CONSTRUCTION, TENDER 167–2023	2023–03–02	NL	BC

SNC·LAVALIN
SNC–LAVALIN INC.
148 Nature Park Way
Winnipeg, MB, Canada R3P 0X7
204–786–8080

DESIGNED BY: N. LEE	CHECKED BY: S. NORSWORTHY
DRAWN BY: D. CALVERLEY	APPROVED BY: B. CLEVEN
SCALE: AS NOTED	ISSUED FOR CONSTRUCTION BY: K. ZUREK
DATE: 2023/02/14	DATE: 2023/02/17
CONSULTANT NO.:	

ENGINEER'S SEAL
2023-03-02
PROVINCE OF MANITOBA
N.C. LEE
Member
23965
REGISTERED PROFESSIONAL ENGINEER

Winnipeg
THE CITY OF WINNIPEG
WATER AND WASTE DEPARTMENT

BANNATYNE FLOOD PUMPING STATION
2023 UPGRADES
MECHANICAL SECTIONS AND DETAILS
MAIN FLOOR AND DRY WELL
NEW WORK

CITY DRAWING NUMBER	SHEET	REV.	SIZE
1–0118F–M0005	001	00	A1

1–0118F–M0005.dwg

LAST SAVE: 2023/03/02 – 3:27pm
PATH: M:\691232\4ENG\45MEC\DD – General DWG\1–0118F–M0005.dwg