A1 SIZE – 594mm x 841mm

LEGEND:

- TERMINAL IN CONTROL PANEL CP–F81
- CRXX — RELAY COIL
- TERMINAL IN MCC
- FIELD WIRE
- INTERNAL WIRE

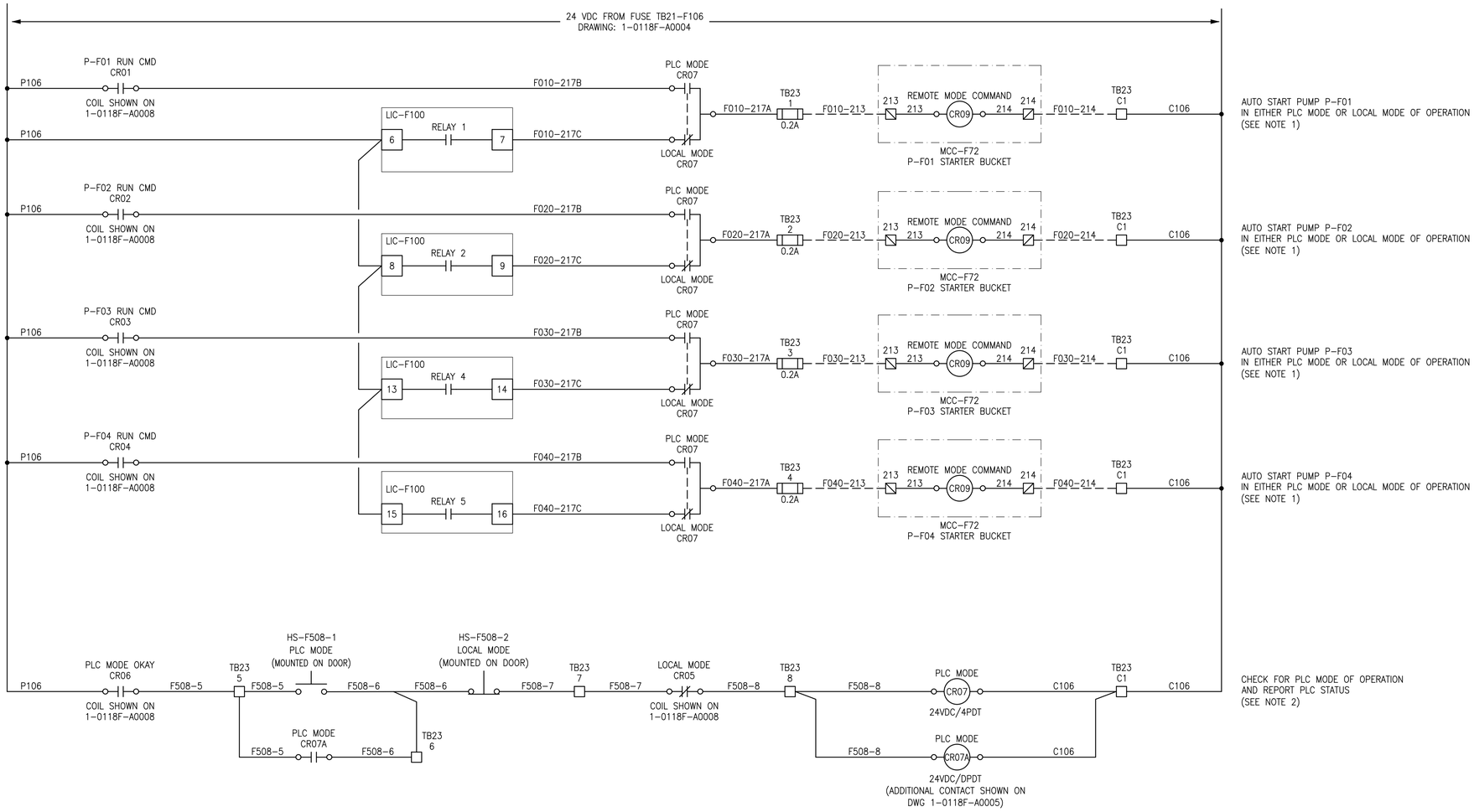

AUTOMATIC PUMP CONTROL & PLC STATUS

SCALE: NTS

GENERAL NOTES:

1. WHEN CONTROL PANEL CP–F81 IS SET TO 'PLC MODE', THE FLOOD PUMPS ARE AUTOMATICALLY STARTED BY PLC–F81 WHEN A HIGH WET WELL LEVEL IS DETECTED FROM LIC–F100. WHEN CONTROL PANEL CP–F81 IS SET TO 'LOCAL MODE', THE FLOOD PUMPS ARE AUTOMATICALLY STARTED BY BY LIC–F100 RELAY CONTACTS WHEN A HIGH WET WELL LEVEL IS DETECTED.
2. IF THE PLC FAILS, THE SYSTEM WILL AUTOMATICALLY TRANSFER TO LOCAL MODE. THE ONLY METHOD OF PLACING THE SYSTEM INTO PLC MODE, IS BY MANUALLY PUSHING THE PLC MODE PUSH BUTTON ON CP–F81 DOOR.

DRAWING NUMBER	REFERENCE DRAWINGS
1–0118F–E0019	MOTOR STARTER SCHEMATIC MS–F04 FLOOD PUMP
1–0118F–E0017	MOTOR STARTER SCHEMATIC MS–F03 FLOOD PUMP
1–0118F–E0015	MOTOR STARTER SCHEMATIC MS–F02 FLOOD PUMP
1–0118F–E0013	MOTOR STARTER SCHEMATIC MS–F01 FLOOD PUMP
1–0118F–A0004	POWER DISTRIBUTION SCHEMATIC CONTROL PANEL CP–F81
1–0118F–A0002	PANEL LAYOUT & BILL OF MATERIALS CONTROL PANEL CP–F81

ENGINEERS GEOSCIENTISTS MANITOBA
Certificate of Authorization
SNC-Lavalin Inc.
No. 4489

NO.	REVISIONS	DATE	DESIGN	CHECK
00	ISSUED FOR CONSTRUCTION, TENDER 167–2023	2023/03/02	MS	BC

SNC·LAVALIN

SNC–LAVALIN INC.
148 Nature Park Way
Winnipeg, MB, Canada R3P 0X7
204–786–8080

DESIGNED BY: M. SARIC	CHECKED BY: B. CLEVEN
DRAWN BY: M. SARIC	APPROVED BY: B. CLEVEN
SCALE: N.T.S.	ISSUED FOR CONSTRUCTION BY: K. ZUREK
DATE: 2022/07/06	DATE: 2023/03/02
CONSULTANT NO.:	

ENGINEER'S SEAL

PROVINCE OF MANITOBA
M. SARIC
Member
46571
REGISTERED PROFESSIONAL ENGINEER
2023-03-02

REV. 00

Winnipeg
THE CITY OF WINNIPEG
WATER AND WASTE DEPARTMENT

BANNATYNE FLOOD PUMPING STATION
2023 UPGRADES
PLC MODE & LOCAL MODE CONTROL SCHEMATIC
PLC CONTROL PANEL CP–F81
AUTO PUMP CONTROL & PLC STATUS

CITY DRAWING NUMBER	SHEET	REV.	SIZE
1–0118F–A0012	001	00	A1

LAST SAVE: 2023/03/02 – 4:15pm
PATH: \\Winpdc1\proj$\691232\4ENG\48IC\DD – General DWG\1–0118F–A0012–001_Rev00.dwg

1–0118F–A0012–001_Rev00.dwg