A1 SIZE – 594mm x 841mm

NOTE:

1. SEE DRAWING 1-0118F-S0002 FOR GENERAL AND STRUCTURAL NOTES.

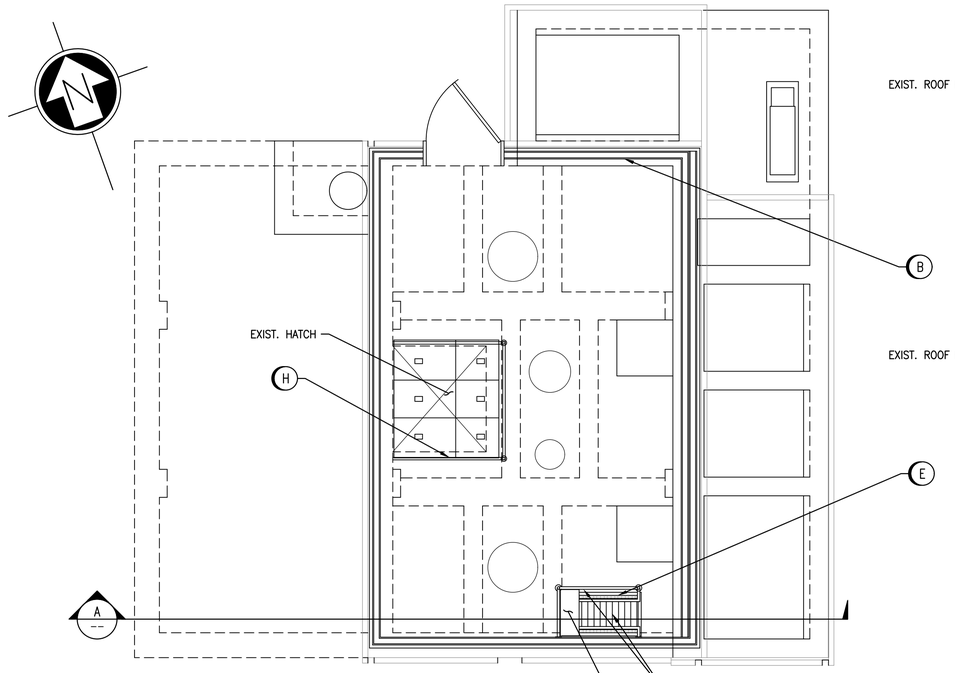

PLAN
SCALE: 1 : 50

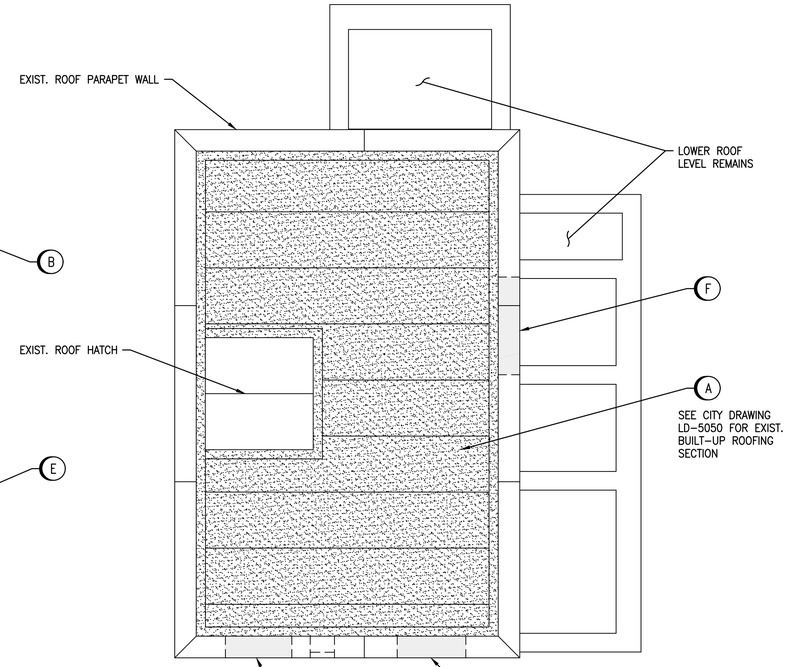

ROOF PLAN
SCALE: 1 : 50

REMOVAL NOTES – BANNATYNE STATION:

A	REMOVE ALL BUILT-UP ROLLED ROOFING AND ISO INSULATION AS REQUIRED DOWN TO ROOF DECK
B	REMOVE ALL INTERIOR SHEATING AND ANY OTHER WALL COVERINGS TO EXPOSE WOOD STUD FRAMING STRUCTURE
C	REMOVE WATER METER WOODEN CABNET
D	REMOVE GUARDRAIL, PLATE COVER AND SHIPS LADDERS / LANDINGS
E	REMOVE STAIR OPENING SIDE RIGID INSULATION
F	CLOSE OFF AND LEAVE EXIST. LOUVRE'S SEE MECH. DRAWINGS
G	REMOVE EXIST. WALL SECTION FOR MECH. DUCT (TAG AC-F64) SEE MECH. DRAWINGS
H	REMOVE HATCH GUARDRAIL ASSEMBLY

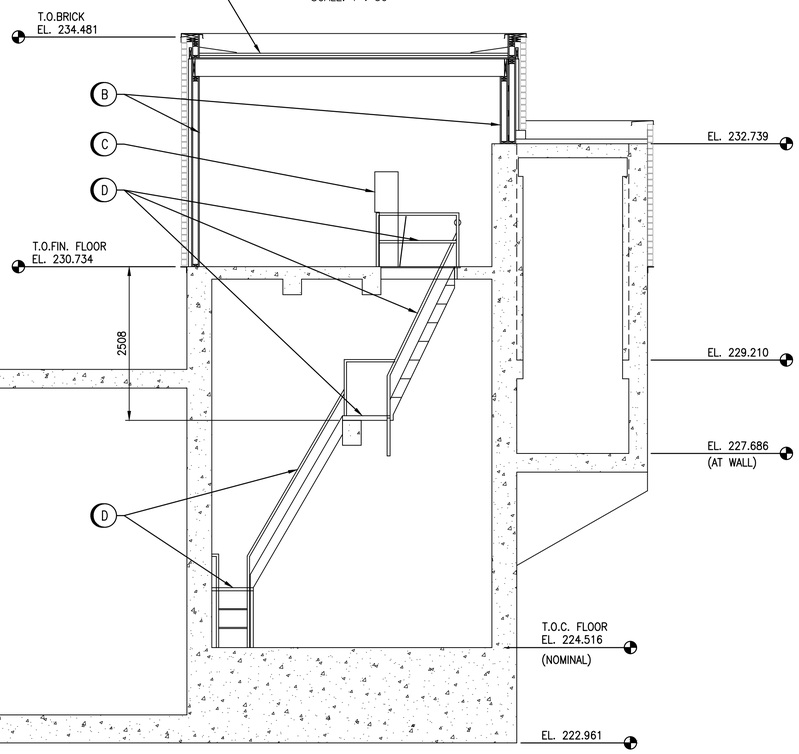

A
--
ELEVATION
SCALE: 1 : 50

SOUTH ELEVATION
SCALE: 1 : 50

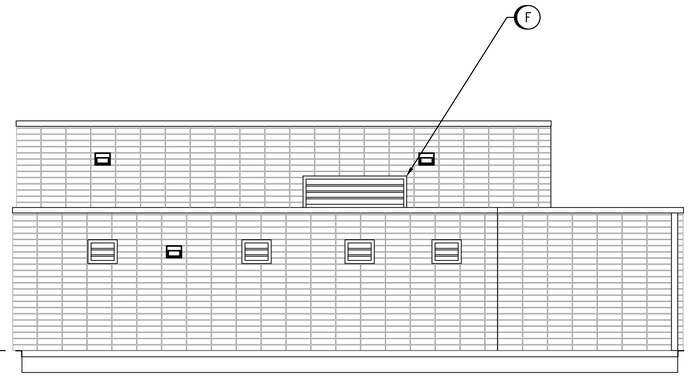

EAST ELEVATION
SCALE: 1 : 50

DRAWING NUMBER	REFERENCE DRAWINGS
LD-5050	BANNATYNE PUMPING STATION – ARCHITECTURAL BUILDING SECTION
LD-5049	BANNATYNE PUMPING STATION – ARCHITECTURAL ELEVATIONS
LD-5048	BANNATYNE PUMPING STATION – ARCHITECTURAL PLANS, PLAN DETAILS & SCHEDULES
5-SD-10-1	BANNATYNE AVE. PUMPING STATION
5-SD-10	BANNATYNE AVE. PUMPING STATION

METRIC
WHOLE NUMBERS INDICATE MILLIMETRES
DECIMALIZED NUMBERS INDICATE METRES
0.0 0.5 1.0 2.0 3.0
1:50

ENGINEERS GEOSCIENTISTS MANITOBA
Certificate of Authorization
SNC-Lavalin Inc.
No. 4489

NO.	REVISIONS	DATE	DESIGN	CHECK
00	ISSUED FOR CONSTRUCTION, TENDER 167-2023	2023/02/23	K.K.	D.S.

SNC·LAVALIN
SNC-LAVALIN INC.
148 Nature Park Way
Winnipeg, MB, Canada R3P 0X7
204-786-8080

DESIGNED BY: K. KOTYK	CHECKED BY: D. SIDHU
DRAWN BY: B. DICKSON	APPROVED BY: B. CLEVEN
SCALE: 1 : 50	ISSUED FOR CONSTRUCTION BY: Z. ZUREK
DATE: 2022/07/05	DATE: 2023/02/23
CONSULTANT NO.:	

ENGINEER'S SEAL
PROVINCE OF MANITOBA
K.K. KOTYK
Member
21950
REGISTERED PROFESSIONAL ENGINEER
2023-02-24 REV. 00

Winnipeg
THE CITY OF WINNIPEG
WATER AND WASTE DEPARTMENT

BANNATYNE FLOOD PUMPING STATION
2023 UPGRADES
STRUCTURAL MODIFICATIONS
PLANS AND ELEVATIONS
DEMOLITION

CITY DRAWING NUMBER	SHEET	REV.	SIZE
1-0118F-S0001	001	00	A1

LAST SAVE: 2023/02/24 – 1:14pm
PATH: M:\691232\4ENG\42STR\DD – General DWG\1-0118F-S0001-001-00.dwg

1-0118F-S0001-001-00.dwg