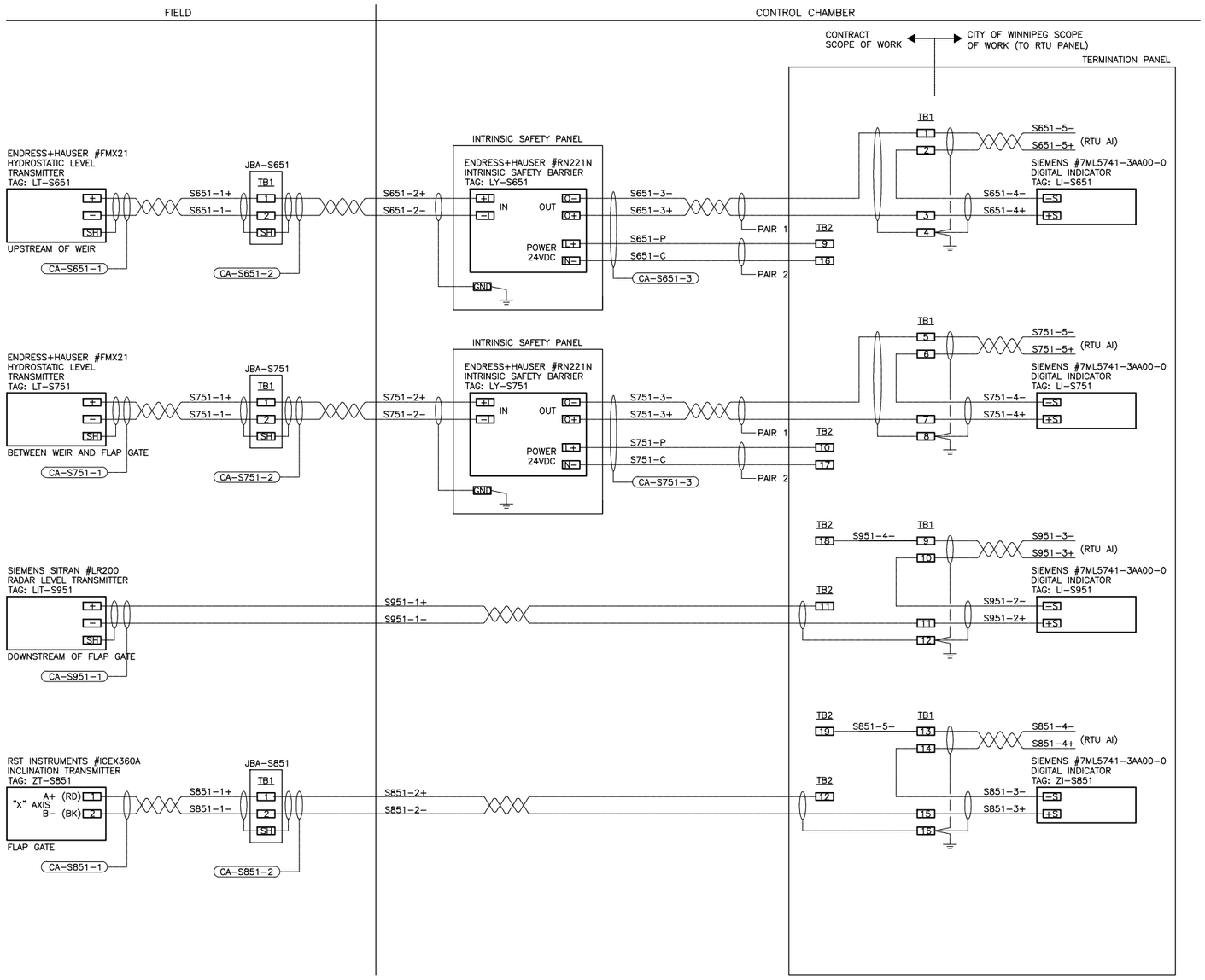

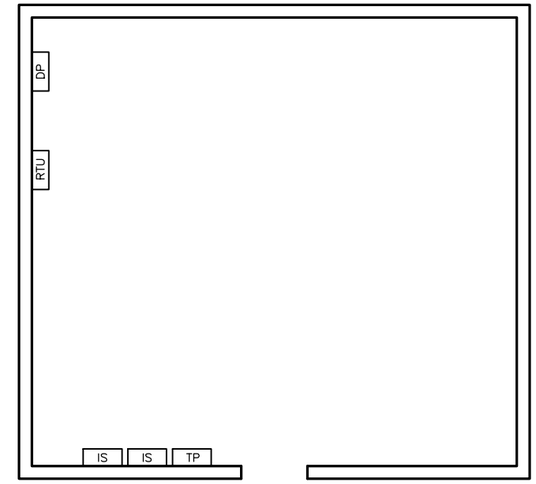

ELECTRICAL ROOM FLOOR PLAN

LEGEND

RTU – NEW RTU PANEL

TP – NEW TERMINATION PANEL

IS – NEW INTRINSIC SAFETY PANELS

DP – EXISTING DISTRIBUTION PANEL 120VAC

NOTES

1) INSTALL TWO FULL SHEETS OF PLYWOOD AND MOUNT ON BACKBOARD RTU PANEL, TP PANEL AND INTRINSIC SAFETY PANELS. ALLOW SPACE FOR FUTURE FLOW METER TRANSMITTER.

2) GROUND INSTRUMENTATION CABLE SHIELDS ONLY AT TERMINATION PANEL.

WARNING

IF POWER EQUIPMENT OR EXPLOSIVES ARE TO BE USED FOR EXCAVATION ON THIS PROJECT THE CONTRACTOR MUST:

1) NOTIFY THE GAS COMPANY OF THE PROPOSED LOCATION OF EXCAVATION.

2) TAKE PRECAUTION TO AVOID DAMAGE TO GAS COMPANY INSTALLATIONS.

SEE PROVINCIAL REGULATION 140/92 FOR DETAILS

METRIC

WHOLE NUMBERS INDICATE MILLIMETRES
DECIMALIZED NUMBERS INDICATE METRES

APEGM
Certificate of Authorization
Stantec Consulting Ltd.
No. 1301

LOCATION APPROVED
UNDERGROUND STRUCTURES

SUPV. U/G STRUCTURES COMMITTEE — DATE

NOTE:
LOCATION OF UNDERGROUND STRUCTURES AS SHOWN ARE BASED ON THE BEST INFORMATION AVAILABLE BUT NO GUARANTEE IS GIVEN THAT ALL EXISTING UTILITIES ARE SHOWN OR THAT THE GIVEN LOCATIONS ARE EXACT. CONFIRMATION OF EXISTENCE AND EXACT LOCATION OF ALL SERVICES MUST BE OBTAINED FROM THE INDIVIDUAL UTILITIES BEFORE PROCEEDING WITH CONSTRUCTION.

B.M.
ELEV.

NO.	REVISIONS	DATE	BY
B	AS BUILT DRAWING	15.04.07	J.C.
A	ISSUED FOR CLIENT REVIEW	13.10.29	J.C.

Stantec
905 Waverley Street, Winnipeg, Manitoba
Tel 204-489-5900 Fax 204-453-9012

DESIGNED BY	S.T.	CHECKED BY	B.J.
DRAWN BY	S.T.	APPROVED BY	B.J.
HOR. SCALE: VERTICAL:	N.T.S.	RELEASED FOR CONSTRUCTION:	
DATE	2013.10.15	DATE	

ENGINEER'S SEAL

CONSULTANT DRAWING NO.
E-3203

Winnipeg
THE CITY OF WINNIPEG
WATER AND WASTE DEPARTMENT

CSO OUTFALL MONITORING
BANNATYNE AVENUE
ELECTRICAL ROOM LAYOUT
LOOP WIRING DIAGRAMS

SHEET 1 OF 1
CAD FILE DRAWING NUMBER 14720e-3203-ban.dwg
CITY DRAWING NUMBER 1-0118-A-A0204-001-00

\\CD1045-F01\workgroup_2\1112\active\111214720\0300_drawing\0302_sheet_files\08_electrical\Bannatyne\14720e-3203-ban.dwg
2015/09/10 10:43 AM By: Betker, Kyle

XX / 779