A1 SIZE – 594mm x 841mm

SPECIFIC NOTES:

1. PROVIDE AND INSTALL CABLES TO MCC-F71. CABLES SHALL BE SPACED A MINIMUM OF 100% CABLE DIAMETER USING MANUFACTURED SPACER BLOCKS. PROVIDE AND INSTALL NEW STRUT SUPPORTS COMPLETE WITH SPACER BLOCKS AT INTERVALS NOT EXCEEDING 1.5M.
2. EXISTING PADMOUNT 500 kVA TRANSFORMER TO BE REUSED. TAP DOWN THE TRANSFORMER TO 585 VAC. PROVIDE NEW TRANSFORMER NAMEPLATE.
3. PROVIDE AND INSTALL NEW CUSTOMER SERVICE TERMINATION ENCLOSURE AND REMOTE METERING CABINET.
4. PROVIDE AND INSTALL NEW 600V MOTOR CONTROL CENTRE.
5. MCC SUPPLIER TO PROVIDE AND INSTALL CONTROL TRANSFORMER FOR POWERING DIGITAL TRIP UNIT.
6. METERING CURRENT TRANSFORMERS ARE TO BE LOCATED OUTSIDE OF SERVICE ENTRANCE COMPARTMENT FOR CUSTOMER ACCESS. METERING AND METERING TRANSFORMERS TO PROVIDED BY MANITOBA HYDRO.
7. RE-CONNECT NEW POWER WIRING TO EXISTING FLOOD PUMP MOTOR.
8. PROVIDE AND INSTALL NEW 600:120/240V DRY-TYPE TRANSFORMER.
9. PROVIDE AND INSTALL NEW 120/240V PANELBOARD.
10. PROVIDE AND INSTALL NEW FAN.
11. PROVIDE AND INSTALL NEW UNIT HEATER.
12. PROVIDE AND INSTALL NEW ELECTRIC DUCT HEATER.
13. PROVIDE AND INSTALL NEW OUTDOOR RATED LOAD BREAK RATED FUSED DISCONNECT SWITCH, CAPABLE OF BEING LOCKED IN THE OPEN AND IN THE CLOSED POSITIONS.
14. PROVIDE AND INSTALL NEW AIR CONDITIONING UNIT.
15. PROVIDE AND INSTALL KIRK KEY INTERLOCK BETWEEN MAIN BREAKER CB-MCC-F71 AND TEMPORARY GENERATOR CONNECTION BREAKER CB-JB-F74 TO PREVENT THE SYSTEM FROM BEING FED FROM 2 SEPARATE SOURCES AT THE SAME TIME.
16. PROVIDE AND INSTALL NEW TEMPORARY GENERATOR CONNECTION.

GENERAL NOTES:

1. ALL EQUIPMENT AND CABLING SHOWN IS NEW AND TO BE PROVIDED UNLESS OTHERWISE INDICATED AS EXISTING.
2. MCC-F71 AND MCC-F72 EMPTY SPACES ARE NOT SHOWN ON THIS DRAWING. REFER TO DRAWING 1-0118F-E0010 FOR AVAILABLE SPACES.
3. NO DE-RATING HAS BEEN APPLIED. UPSIZE CABLES AND CONDUITS AS REQUIRED IN ACCORDANCE WITH CEC STANDARDS.
4. CONTRACT ADMINISTRATOR TO PROVIDE BREAKER PROTECTION SETTINGS AT A LATER TIME.

LEGEND:

- EXISTING
- NEW WORK
- PLC — PLC CONNECTION
- PM — MULTIFUNCTION POWER METER
- K1 — KIRK-KEY INTERLOCK

BREAKER PROTECTION SETTINGS

CIRCUIT BREAKER	MODEL	TRIP UNIT	FRAME	SENSOR/ TRIP UNIT	LTPU (Ir)	LTD (tr)	STPU (Isd)	STD (tsd)	INST (Ii)
CSTE-F70.MCB-CSTE	POWERPACT L SERIES	MICROLOGIC LSI 5.3A	600A	(IN) 600A	600A	X SEC.	TBD	TBD	TBD
MCC-F71.MCB	POWERPACT L SERIES	MICROLOGIC LSI 5.3A	600A	(IN) 600A	600A	X SEC.	TBD	TBD	TBD
MCC-F71.CB-F72	POWERPACT L SERIES	MICROLOGIC LSI 5.3A	600A	(IN) 600A	600A	X SEC.	TBD	TBD	TBD
MCC-F71.CB-JB-F74	POWERPACT L SERIES	MICROLOGIC LSI 5.3A	400A	(IN) 400A	400A	X SEC.	TBD	TBD	TBD
MCC-F72.CB-F01	POWERPACT J SERIES	MICROLOGIC LI 3.2	250A	(IN) 250A	250A	X SEC.	–	–	TBD
MCC-F72.CB-F02	POWERPACT J SERIES	MICROLOGIC LI 3.2	250A	(IN) 250A	200A	X SEC.	–	–	TBD
MCC-F72.CB-F03	POWERPACT H SERIES	MICROLOGIC LI 3.2	150A	(IN) 150	90A	X SEC.	–	–	TBD
MCC-F72.CB-F04	POWERPACT J SERIES	MICROLOGIC LI 3.2	250A	(IN) 250A	250A	X SEC.	–	–	TBD

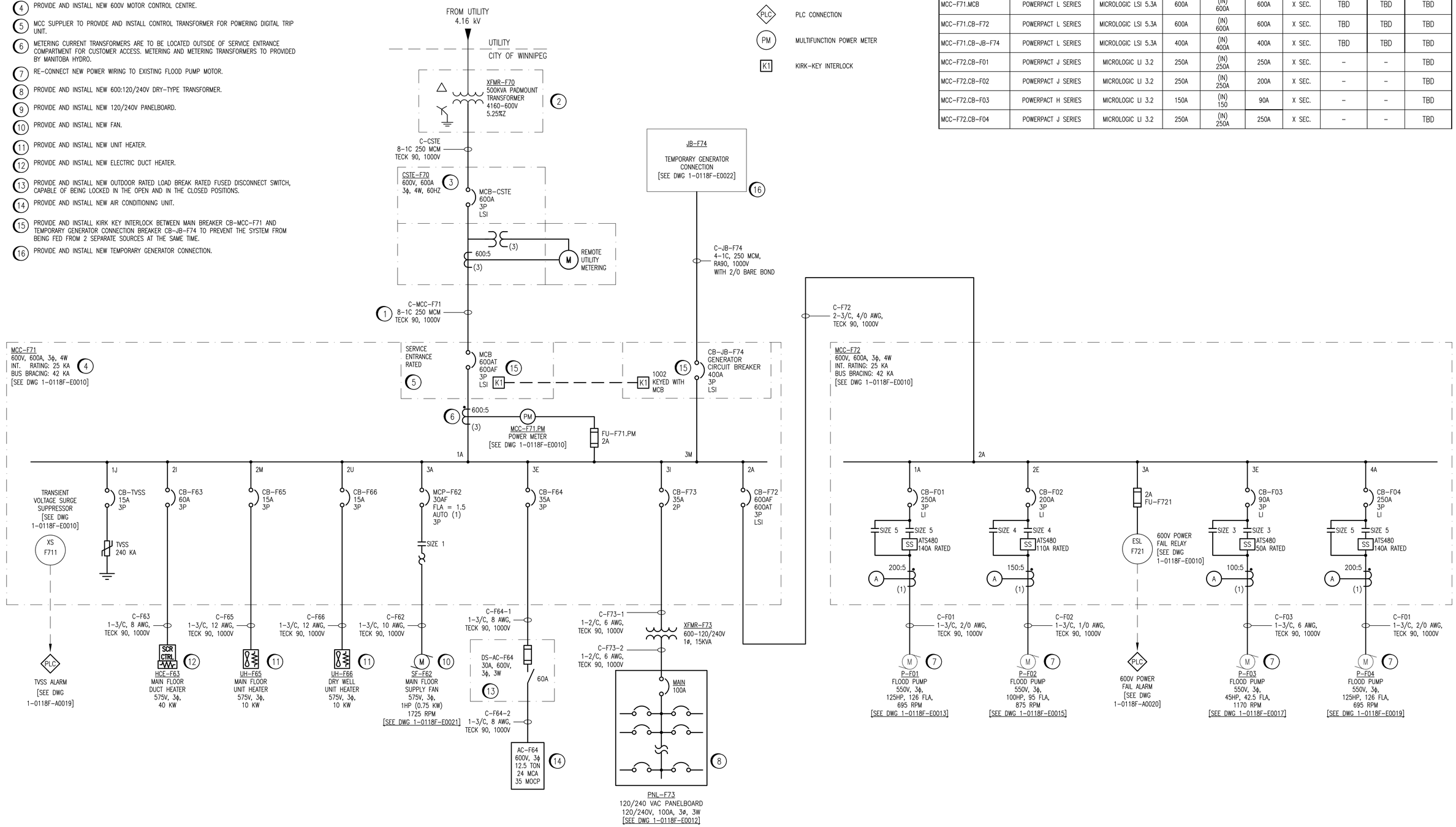

DRAWING NUMBER	REFERENCE DRAWINGS
1-0118F-E0012	ELECTRICAL SCHEDULES, LUMINAIRE AND EMERGENCY LIGHTING
1-0118F-E0010	MCC ELEVATION & DETAILS
1-0118F-E0007	ELECTRICAL PLAN LAYOUT WET WELL AND DRY WELL AREA
1-0118F-E0006	ELECTRICAL PLAN LAYOUT MAIN FLOOR AND EXTERIOR

NO.	REVISIONS	DATE	DESIGN	CHECK
00	ISSUED FOR CONSTRUCTION, TENDER 167-2023	2023/03/02	MS	BC

SNC·LAVALIN

SNC-LAVALIN INC.
148 Nature Park Way
Winnipeg, MB, Canada R3P 0X7
204-786-8080

DESIGNED BY: N. ESCHUK	CHECKED BY: B. CLEVEN
DRAWN BY: N. ESCHUK	APPROVED BY: B. CLEVEN
SCALE: NTS	ISSUED FOR CONSTRUCTION BY: K. ZUREK
DATE: 2022/06/21	DATE: 2023/03/02
CONSULTANT NO.:	

ENGINEER'S SEAL

PROVINCE OF MANITOBA
M. SARTO
Member
46571
REGISTERED PROFESSIONAL ENGINEER
2023-03-02

REV 00

Winnipeg

THE CITY OF WINNIPEG
WATER AND WASTE DEPARTMENT

BANNATYNE FLOOD PUMPING STATION
2023 UPGRADES
ELECTRICAL SINGLE LINE DIAGRAM

CITY DRAWING NUMBER	SHEET	REV.	SIZE
1-0118F-E0005	001	00	A1

1-0118F-E0005-001_Rev00.dwg

LAST SAVE: 2023/03/02 – 3:53pm
PATH: \\Winpdc1\proj$\69132\4ENG\47ELE\DD – General DWG\1-0118F-E0005-001_Rev00.dwg