A1 SIZE – 594mm x 841mm

MCC–F71 REQUIREMENTS:

IDENTIFIER: MCC–F71		
ENCLOSURE TYPE: NEMA 1A	MOUNTING: FRONT	DEPTH: 508mm
SUPPLY VOLTAGE: 600V, 3ø, 4W, 60 Hz		INCOMING NEUTRAL TERMINATION: YES
CONTROL VOLTAGE: 120V, 60 Hz	WIRING: CLASS I, TYPE Bd OR Bt AS SHOWN ON THE DRAWINGS	
MINIMUM BUS RATING: HORIZONTAL: 600A		VERTICAL: AS REQ'D
SUITABLE FOR SERVICE ENTRANCE: YES		NEUTRAL BUS: YES
BUS BRACING: 42kA	SCCR: 25 kA	SERIES SCCR PERMITTED: NO
BUS MATERIAL: TIN PLATED COPPER		
MANUFACTURER: SCHNEIDER ELECTRIC		MODEL: MODEL 6

MCC–F72 REQUIREMENTS:

IDENTIFIER: MCC–F72		
ENCLOSURE TYPE: NEMA 1A	MOUNTING: FRONT	DEPTH: 508mm
SUPPLY VOLTAGE: 600V, 3ø, 3W, 60 Hz		INCOMING NEUTRAL TERMINATION: NO
CONTROL VOLTAGE: 120V, 60 Hz	WIRING: CLASS I, TYPE Bd OR Bt AS SHOWN ON THE DRAWINGS	
MINIMUM BUS RATING: HORIZONTAL: 600A		VERTICAL: AS REQ'D
SUITABLE FOR SERVICE ENTRANCE: NO		NEUTRAL BUS: NO
BUS BRACING: 42kA	SCCR: 25 kA	SERIES SCCR PERMITTED: NO
BUS MATERIAL: TIN PLATED COPPER		
MANUFACTURER: SCHNEIDER ELECTRIC		MODEL: MODEL 6

LAMACOID SCHEDULE

LEGEND	LAMACOID ENGRAVING
1	READY
2	RUNNING
3	SS FAULT RESET
4	OFF ON
5	SS TRIP RESET
6	MANUAL START
7	MANUAL STOP
8	E–STOP
9	MOTOR RUN TIME
10	MOTOR CURRENT
11	OVERLOAD
12	O/L TRIP RESET
13	MAN OFF AUTO

LEGEND:

- CT SHORTING BLOCK TERMINAL
- FEED THROUGH TERMINAL BLOCK
- BLUE PILOT LIGHT
- GREEN PILOT LIGHT
- AMBER PILOT LIGHT
- 3–POSITION SWITCH
- 2–POSITION SWITCH
- PUSH BUTTON
- EMERGENCY STOP BUTTON
- PUSH BUTTON
- HOUR METER
- ANALOG CURRENT METER

GENERAL NOTES:

1. MOTOR CONTROL CENTRES ARE TO BE ARRANGED EXACTLY AS INDICATED. ARRANGE PUSH BUTTONS, HAND–OFF–AUTO, PILOT LIGHTS, EMERGENCY STOPS AND LAMACOID POSITIONS EXACTLY AS SHOWN.
2. ALL LAMACOIDS ARE TO HAVE A WHITE BACKGROUND WITH BLACK TEXT.
3. THIS FACILITY HAS LARGE FLOOD PUMP LOADS THAT RARELY RUN. THE DIGITAL TRIP PLUG DISPLAY IS TO BE DISPLAYED AT ALL TIMES WHEN THE MCC IS ENERGIZED. THE SUPPLIER IS TO PROVIDE A CONTROL TRANSFORMER TO POWER THE BREAKER TRIP PLUG DISPLAY.
4. MCC SUPPLIER SHALL NOT PROVIDE PROVIDE 600V POWER TERMINALS WITHIN POWER METER BUCKET, TVSS BUCKET, AS WELL AS THE 600V POWER FAILURE RELAY BUCKET.
5. LAMACOID TO BE IN A RED BACKGROUND WITH WHITE TEXT.

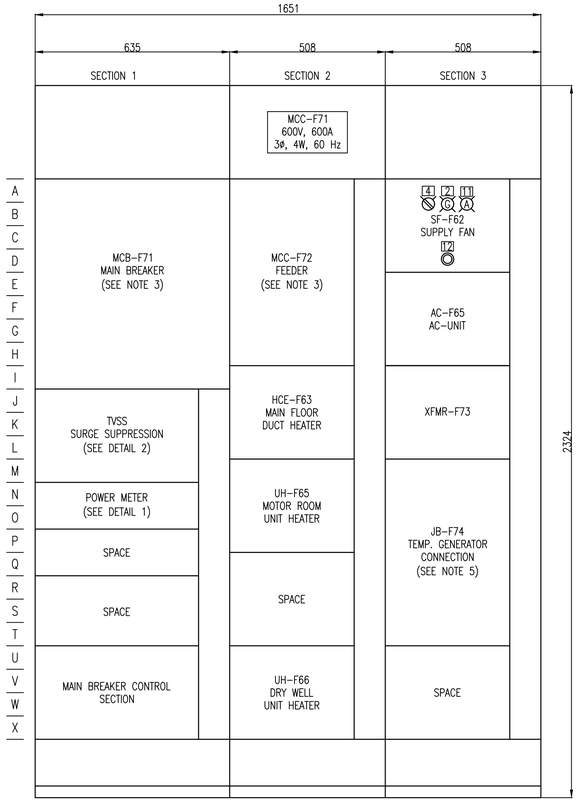

MCC–F71 ELEVATION

SCALE: 1 : 10

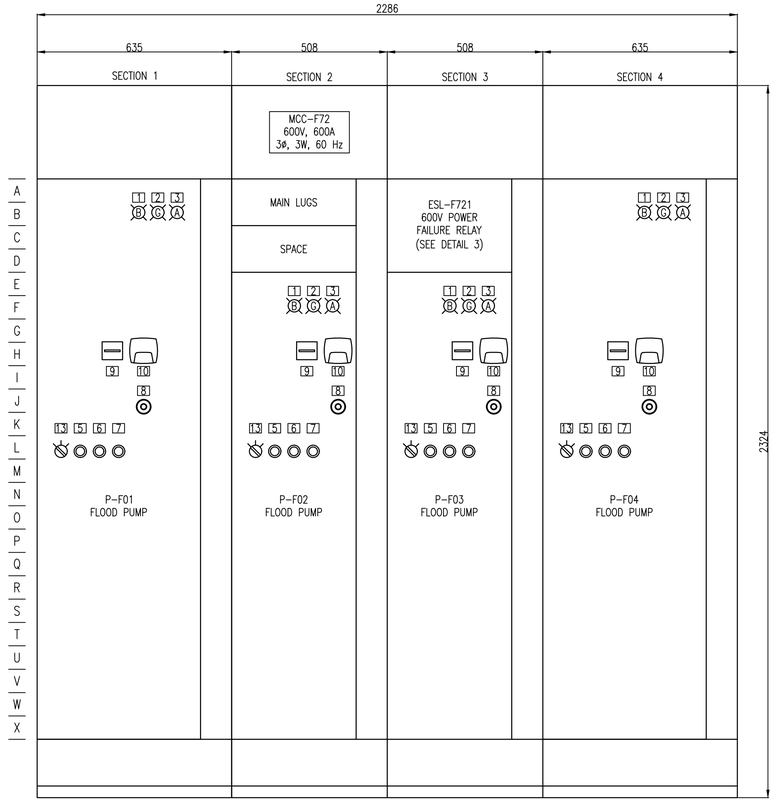

MCC–F72 ELEVATION

SCALE: 1 : 10

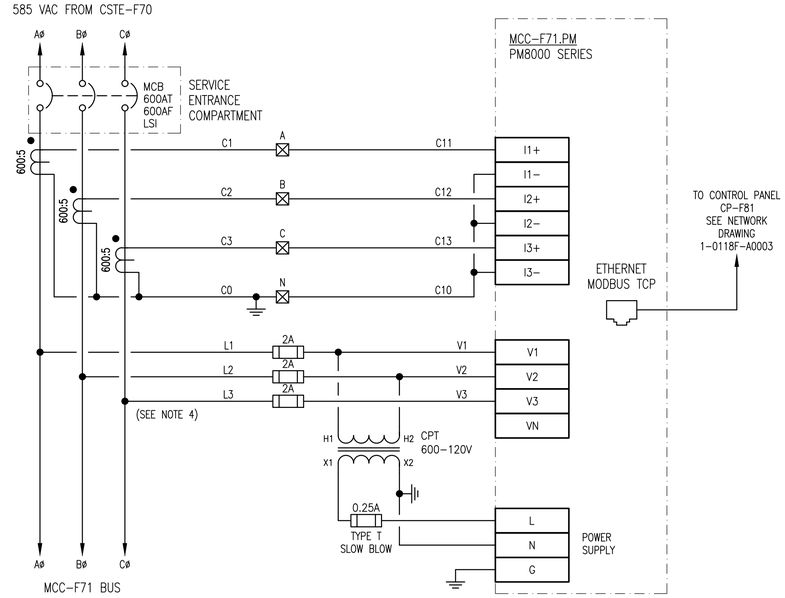

1 MCC–F71 POWER METER

SCALE: NTS

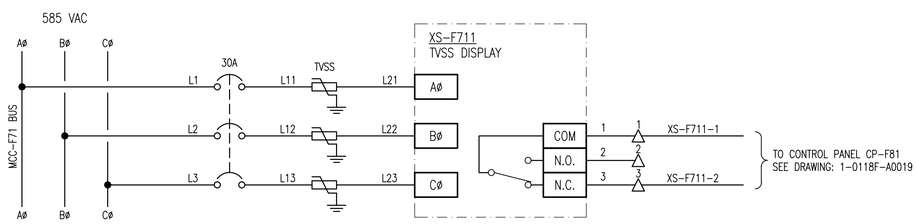

2 XS–F711 TRANSIENT VOLTAGE SURGE SUPRESSOR

SCALE: NTS

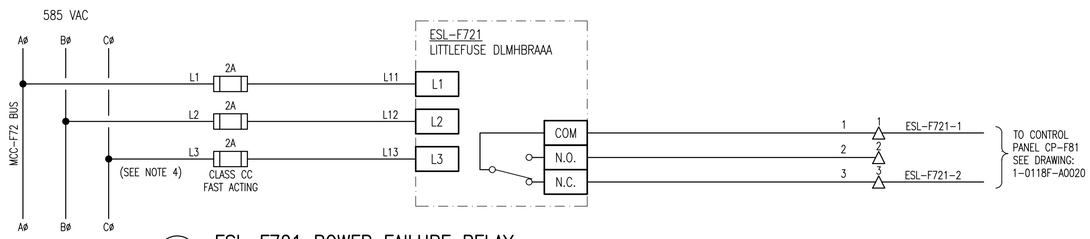

3 ESL–F721 POWER FAILURE RELAY

SCALE: NTS

DRAWING NUMBER	REFERENCE DRAWINGS
1–0118F–E0006	ELECTRICAL PLAN LAYOUT MAIN FLOOR AND EXTERIOR
1–0118F–E0005	ELECTRICAL SINGLE LINE DIAGRAM

METRIC
WHOLE NUMBERS INDICATE MILLIMETRES
DECIMALIZED NUMBERS INDICATE METRES

0.25 0 0.25 0.5m

1 : 10

ENGINEERS GEOSCIENTISTS MANITOBA
Certificate of Authorization
SNC-Lavalin Inc.
No. 4489

NO.	REVISIONS	DATE	DESIGN	CHECK
00	ISSUED FOR CONSTRUCTION, TENDER 167–2023	2023/03/02	MS	BC

SNC·LAVALIN
SNC–LAVALIN INC.
148 Nature Park Way
Winnipeg, MB, Canada R3P 0X7
204–786–8080

DESIGNED BY: N. ESCHUK	CHECKED BY: B. CLEVEN
DRAWN BY: B. WILKS	APPROVED BY: B. CLEVEN
SCALE: AS SHOWN	ISSUED FOR CONSTRUCTION BY: K. ZUREK
DATE: 2022/07/04	DATE: 2023/03/02
CONSULTANT NO.:	

ENGINEER'S SEAL
PROVINCE OF MANITOBA
M. SARIC
Member
46571
REGISTERED PROFESSIONAL ENGINEER
2023-03-02
REV: 00

Winnipeg
THE CITY OF WINNIPEG
WATER AND WASTE DEPARTMENT

BANNATYNE FLOOD PUMPING STATION
2023 UPGRADES
MCC–F71 AND MCC–F72
ELEVATION AND DETAILS

CITY DRAWING NUMBER	SHEET	REV.	SIZE
1–0118F–E0010	001	00	A1

1–0118F–E0010–001_Rev00.dwg

LAST SAVE: 2023/03/02 – 3:58pm
PATH: \\Winpdc1\proj$\691232\4ENG\47ELE\DD – General DWG\1–0118F–E0010–001_Rev00.dwg