A1 SIZE – 594mm x 841mm

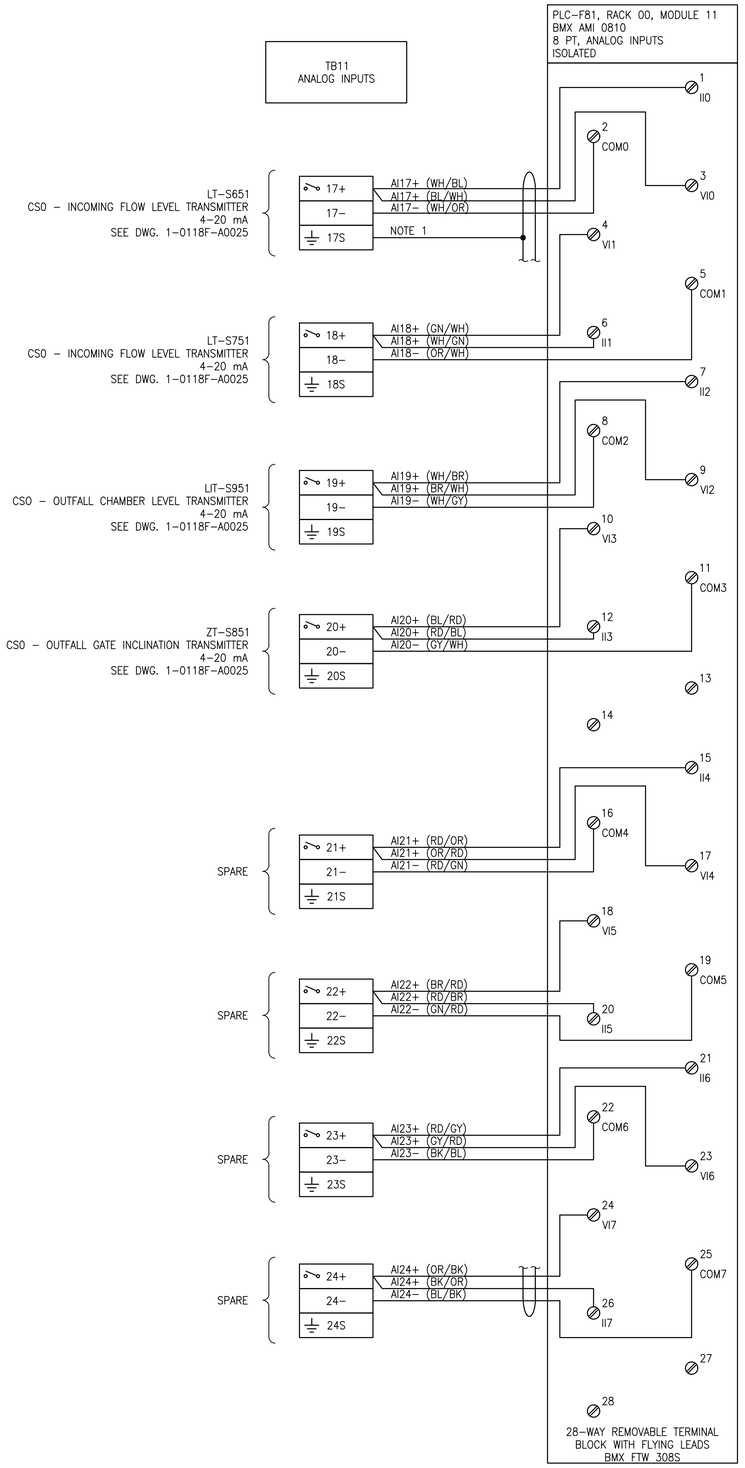

GENERAL NOTES:

1. CONNECT FLYING LEADS CABLE OVERALL SHIELD TO TERMINAL 1S.

DRAWING NUMBER	REFERENCE DRAWINGS
1–0118F–A0004	POWER DISTRIBUTION SCHEMATIC PLC CONTROL PANEL CP–F81
1–0118F–A0002	PANEL LAYOUT & BILL OF MATERIALS PLC CONTROL PANEL CP–F81

ENGINEERS GEOSCIENTISTS MANITOBA
Certificate of Authorization
SNC-Lavalin Inc.
No. 4489

NO.	REVISIONS	DATE	DESIGN	CHECK
00	ISSUED FOR CONSTRUCTION, TENDER 167–2023	2023/03/02	MS	BC

SNC·LAVALIN

SNC–LAVALIN INC.
148 Nature Park Way
Winnipeg, MB, Canada R3P 0X7
204–786–8080

DESIGNED BY: M. SARIC	CHECKED BY: B. CLEVEN
DRAWN BY: M. SARIC	APPROVED BY: B. CLEVEN
SCALE: N.T.S.	ISSUED FOR CONSTRUCTION BY: K. ZUREK
DATE: 2022/07/06	DATE: 2023/03/02
CONSULTANT NO.:	

ENGINEER'S SEAL

PROVINCE OF MANITOBA
M. SARIC
Member
46571
REGISTERED PROFESSIONAL ENGINEER
2023-03-02

REV. 00

Winnipeg
THE CITY OF WINNIPEG
WATER AND WASTE DEPARTMENT

BANNATYNE FLOOD PUMPING STATION
2023 UPGRADES
PLC I/O WIRING DIAGRAM
PLC CONTROL PANEL CP–F81
ANALOG INPUTS RACK 00, MODULE 11

CITY DRAWING NUMBER	SHEET	REV.	SIZE
1–0118F–A0011	001	00	A1

LAST SAVE: 2023/03/02 – 4:14pm
PATH: \\Winpdc1\proj$\691232\4ENG\48IC\DD – General DWG\1–0118F–A0011–001_Rev00.dwg