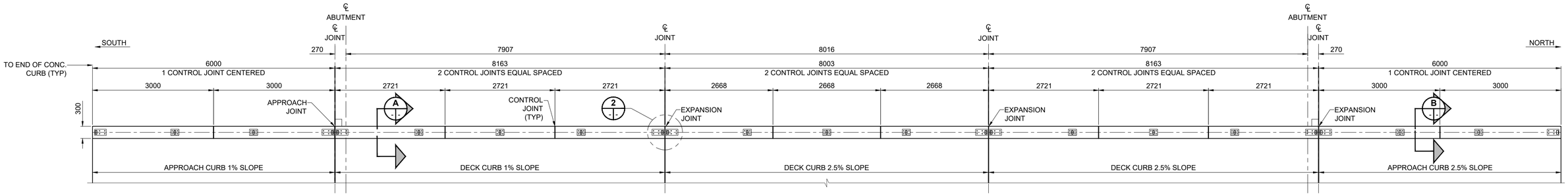

WEST CURB PLAN

SCALE: 1:50

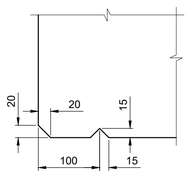

1 **DETAIL**
SCALE 1:5

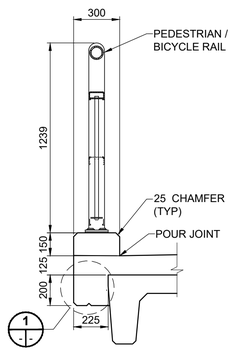

A **SECTION**
CONCRETE DETAIL
SCALE 1:20

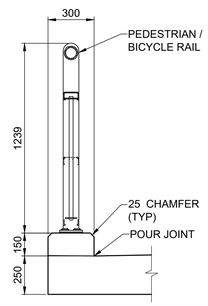

B **SECTION**
CONCRETE DETAIL
SCALE 1:20

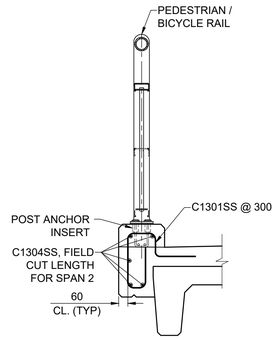

A **SECTION**
REINFORCING DETAIL
SCALE 1:20

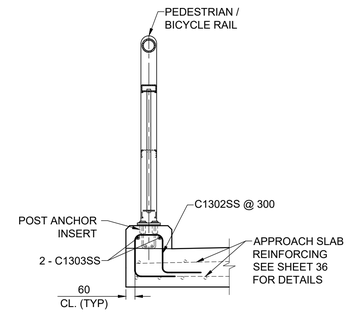

B **SECTION**
REINFORCING DETAIL
SCALE 1:20

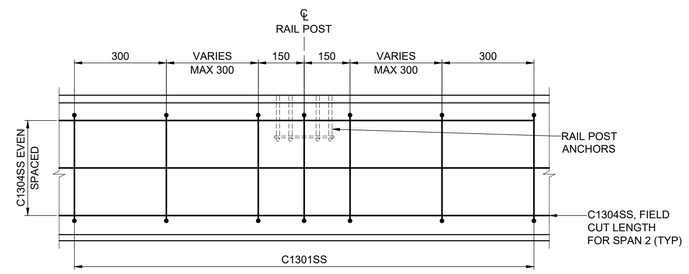

TYPICAL DECK CURB REINFORCING

ELEVATION VIEW
SCALE 1:10

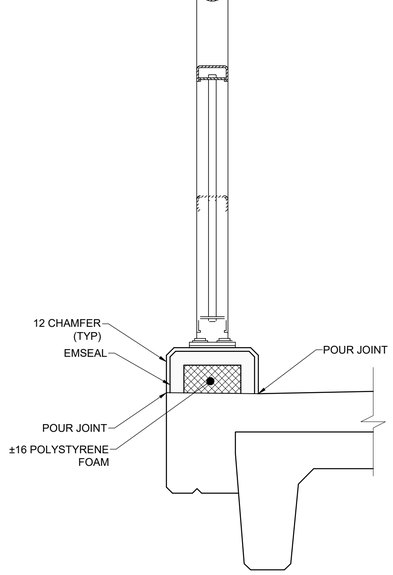

EXPANSION JOINT DETAIL

ELEVATION VIEW
SCALE 1:10

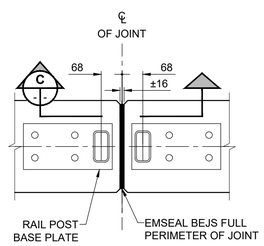

2 **DETAIL**
SCALE 1:10

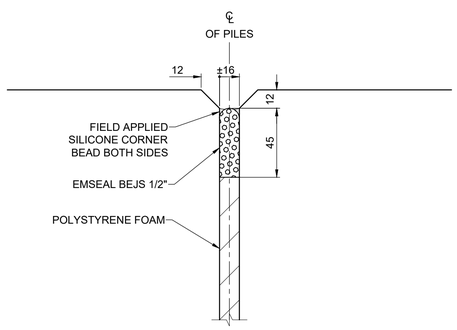

C **SECTION**
SCALE: 1:2

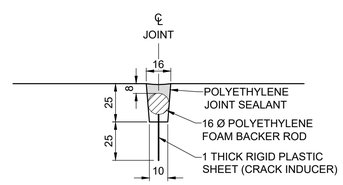

CONTROL JOINT DETAIL

SCALE 1:2

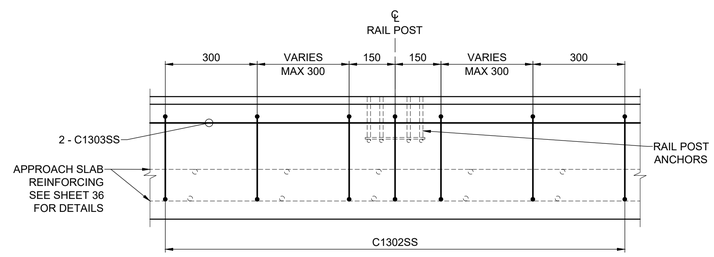

TYPICAL APPROACH CURB REINFORCING

ELEVATION VIEW
SCALE 1:10

ENGINEERS GEOSCIENTISTS MANITOBA
Certificate of Authorization
MORRISON HERSHFIELD
No. 1736

TENDER No. 335-2023

LOCATION APPROVED
UNDERGROUND STRUCTURES

SUPR. U/G STRUCTURES COMMITTEE — DATE

NOTE:
LOCATION OF UNDERGROUND STRUCTURES AS SHOWN ARE BASED ON THE BEST INFORMATION AVAILABLE BUT NO GUARANTEE IS GIVEN THAT ALL EXISTING UTILITIES ARE SHOWN OR THAT THE GIVEN LOCATIONS ARE EXACT. CONFIRMATION OF EXISTENCE AND EXACT LOCATION OF ALL SERVICES MUST BE OBTAINED FROM THE INDIVIDUAL UTILITIES BEFORE PROCEEDING WITH CONSTRUCTION.

BM 78-009 ELEV 232.749 m — N.W. Cor. Paddington Rd. & Dakota St., 19 mm dia. x 6.1 m I.B. in Valve Box, 5.5 m S. of N.L. Paddington Rd. & on W.L. of Dakota St., in traffic island.

No.	REVISIONS	YY/MM/DD	BY
C	ISSUED FOR TENDER	23/08/02	BAP
B	ISSUED FOR 95% REVIEW	23/06/27	BAP
A	ISSUED FOR 50% REVIEW	23/04/14	BAP

MORRISON HERSHFIELD

DESIGNED BY	ALP	CHECKED BY	AGG
DRAWN BY	AS	APPROVED BY	BAP
HOR SCALE	AS SHOWN	RELEASED FOR CONSTRUCTION	
VERT SCALE	AS SHOWN		
DATE	JUNE 27, 2023	DATE	

PROFESSIONAL'S SEAL
PROVINCE OF MANITOBA — A.D.G. GILARSKI — Member 32144 — 2023-08-02 — REGISTERED PROFESSIONAL ENGINEER

CONSULTANT FILE NAME
22036665-CBR DD-BARRIER05.dwg

Winnipeg

THE CITY OF WINNIPEG
PUBLIC WORKS DEPARTMENT
ENGINEERING DIVISION

CREEK BEND ROAD BRIDGE REPLACEMENT AND RELATED WORKS

CURB LAYOUT AND DETAILS

CITY DRAWING NUMBER: B149-23-31
SHEET 31 OF 52
DRAWING NUMBER: 31

METRIC
WHOLE NUMBERS INDICATE MILLIMETRES
DECIMALIZED NUMBERS INDICATE METRES

ISO A1 - 594mm x 841mm

X:\Proj\2022\22036566\0-CdW 293-2022 Creek Bend Road Bri\09. CAD\07 Sheets\Structural\Detailed Design\22036665-CBR DD-BARRIER05.dwg Last Saved: 7/31/2023 3:36 PM by AHeppner Plotted: 8/2/2023 3:30 PM by Alex Heppner