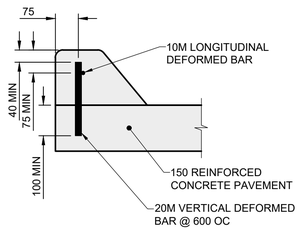

SECTION

SCALE: 1:10

0 0.25 0.50m

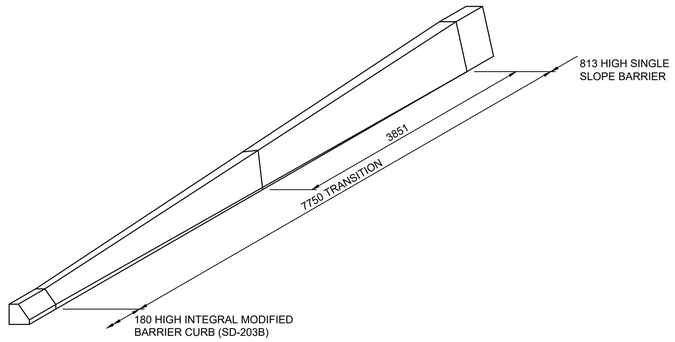

MODIFIED BARRIER CURB TO TRAFFIC BARRIER TRANSITION

SCALE: 1:50

0 0.5 1.0 2.0 3.0m

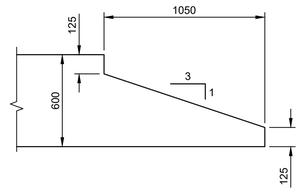

NOTE: ALL NEW CSP'S TO BE INSTALLED C/W BEVEL END SECTIONS.

CSP BEVEL ENDS

SCALE: 1:20

0 0.5 1.0m

ENGINEERS GEOSCIENTISTS MANITOBA
Certificate of Authorization
MORRISON HERSHFIELD
No. 1736

TENDER No. 335-2023

METRIC

WHOLE NUMBERS INDICATE MILLIMETRES
DECIMALIZED NUMBERS INDICATE METRES

EXISTING	LEGEND - PLAN	NEW	EXISTING	LEGEND - PLAN	NEW	EXISTING	LEGEND - PLAN	NEW
	GAS		○	MANHOLE	●		CONCRETE PAVEMENT	
	MTS HANDWELL/PEDESTAL		□	CATCH BASIN/CATCH PIT	■		CONC SIDEWALK/MEDIAN	
	HYDRO HANDWELL/CABINET		△	CURB INLET WITH BOX	▲		ASPHALT PAVEMENT	
	CATV/FIBRE OPTIC			TREE			PAVING STONE	
	TRAFFIC SIGNALS/PIT		TH-12	TEST HOLE			GRAVEL	
	LAND DRAINAGE SEWER			PROPERTY LINE			RAMP CURB	
	SANITARY/COMBINED SEWER			SURVEY BAR			PLANING/REMOVAL	
	CB LEAD/SSP/DCP			FENCE				
	WATERMAIN			BOC/EDGE OF PAVEMENT				
	SUBDRAIN		33.000	ELEVATION	33.333			
	DITCH			TRAFFIC SIGN				

LOCATION APPROVED

UNDERGROUND STRUCTURES

SUPR. U/G STRUCTURES COMMITTEE — DATE

NOTE:
LOCATION OF UNDERGROUND STRUCTURES AS SHOWN ARE BASED ON THE BEST INFORMATION AVAILABLE BUT NO GUARANTEE IS GIVEN THAT ALL EXISTING UTILITIES ARE SHOWN OR THAT THE GIVEN LOCATIONS ARE EXACT. CONFIRMATION OF EXISTENCE AND EXACT LOCATION OF ALL SERVICES MUST BE OBTAINED FROM THE INDIVIDUAL UTILITIES BEFORE PROCEEDING WITH CONSTRUCTION.

BM 78-009
ELEV 232.749 m
N.W. Cor. Paddington Rd. & Dakota St., 19 mm dia. x 6.1 m I.B. in Valve Box, 5.5 m S. of N.L. Paddington Rd. & on W.L. of Dakota St., in traffic island

No.	REVISIONS	YY/MM/DD	BY
C	ISSUED FOR TENDER	23/08/01	JGK
B	ISSUED FOR 95% REVIEW	23/06/27	JGK
A	ISSUED FOR 50% REVIEW	23/04/14	JGK

MORRISON HERSHFIELD

DESIGNED BY	JGK	CHECKED BY	ACK
DRAWN BY	KMB	APPROVED BY	RPB
HOR SCALE / VERT SCALE	AS NOTED	RELEASED FOR CONSTRUCTION	
DATE	JUNE 27, 2023	DATE	

PROFESSIONAL'S SEAL
PROVINCE OF MANITOBA
J.G. KENNEDY
Member
22326
2023-08-01
REGISTERED PROFESSIONAL ENGINEER

CONSULTANT FILE NAME
2203665-Creek Bend-DT-01.dwg

Winnipeg

THE CITY OF WINNIPEG
PUBLIC WORKS DEPARTMENT
ENGINEERING DIVISION

CREEK BEND ROAD BRIDGE REPLACEMENT AND RELATED WORKS

CREEK BEND ROAD DETAILS

CITY DRAWING NUMBER: P-3567-05

SHEET 47 OF 51

DRAWING NUMBER: 47

ISO A1 - 594mm x 841mm
Plotted: 8/1/2023 9:57 AM by Dave Lane
Last Saved: 7/31/2023 3:57 PM by DLane
x:\Proj\2022\2203665\00-cofw 293-2022 creek bend road bri\09_cad\07 sheets\Roadworks\2203665-Creek Bend-DT-01.dwg