FUSE SCHEDULE			
TB	IDENTIFIER	SIZE	RATED CURRENT (A)
TB02	FU01	5x20mA	5A TD
	FU02	5x20mA	2A FA
	FU03	5x20mA	2A FA
	FU04	5x20mA	2A FA
	FU05	5x20mA	2A FA
TB20	FU20	5x20mA	5A TD
	FU21	5x20mA	5A TD
	FU22	5x20mA	0.5A FA
	FU23	5x20mA	0.5A FA
	FU24	5x20mA	0.5A FA
	FU25	5x20mA	0.5A FA
	FU26	5x20mA	5A FA
	FU27	5x20mA	5A FA
	FU28	5x20mA	5A FA
	FU29	5x20mA	5A FA
	FU30	5x20mA	0.5A FA
	FU31	5x20mA	0.5A FA
	FU32	5x20mA	0.5A FA
	FU33	5x20mA	0.5A FA

NOTE:
TD = TIME DELAY
FA = FAST ACTING

POWER CONSUMPTION SCHEDULE AT 24VDC			
DEVICE	QTY	AMPS (mA)	SUBTOTAL (mA)
PLC-M806	1	1650	1650
DISCRETE INPUTS	64	2.5	160
DISRETE OUTPUTS	16	50	800
ANALOG INPUTS	16	20	320
HMI SCREEN	1	700	700
TOTAL (mA)			3630

NOTES:

1. SEE DWG. 1-0650M-A0058 FOR UPS-M1 ALARM LOOP DIAGRAM
2. VERIFY AND ASSIGN A SPARE CCT NUMBER IN PNL-E ON SITE AND CONSULT WITH CONTRACT ADMINISTRATOR FOR APPROVAL. UPDATE DRAWING WITH CCT NUMBER.

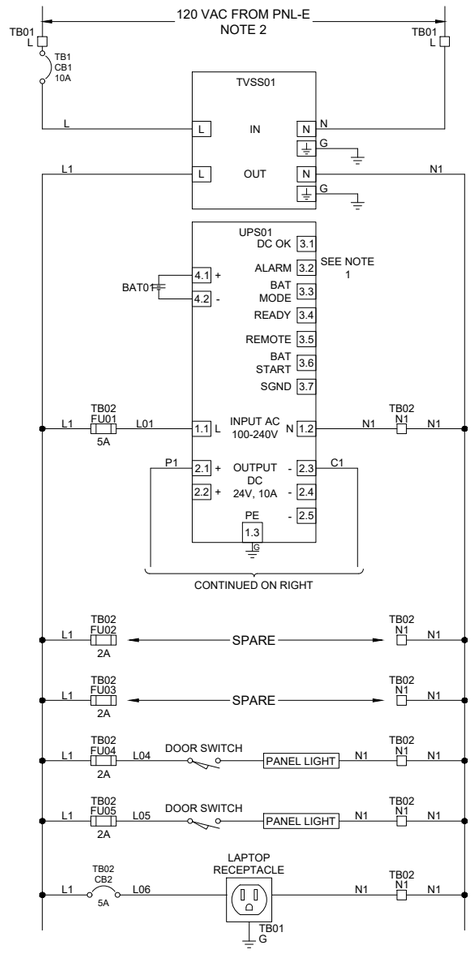

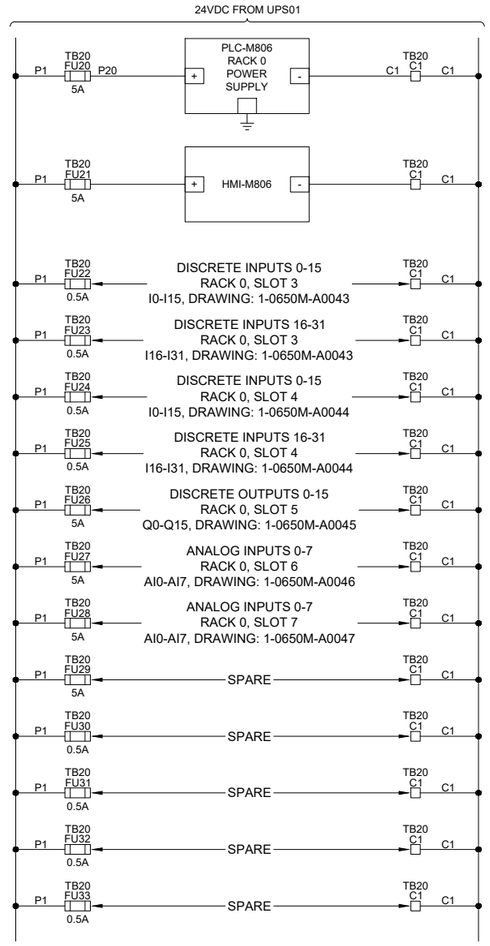

DRAWING NUMBER	REFERENCE DRAWING
1-0650A-A0001	INSTRUMENT LAYOUT
1-0650M-A0042 - A0061	ALL AUTOMATION DRAWINGS
1-0650M-A0040	HVAC CONTROL PANEL CP-M806 PANEL LAYOUT

ENGINEERS GEOSCIENTISTS MANITOBA
Certificate of Authorization
AECOM Canada Ltd.
No. 4671 Date: 2023-07-14

NO.	REVISIONS	DATE	DESIGN	CHECK
0	ISSUED FOR TENDER/CONSTRUCTION	2023-07-14	MAM	ALV

AECOM

DESIGNED BY: MAM	CHECKED BY: ALV
DRAWN BY: MAM	APPROVED BY: SSB
SCALE: NTS	RELEASED FOR CONSTRUCTION BY:
DATE: 2023-07-14	DATE:
CONSULTANT NO.:	

ENGINEER'S SEAL
PROVINCE OF MANITOBA
S.S. BOGHOSIAN
Member
33454
REGISTERED PROFESSIONAL ENGINEER
2023-07-14

Winnipeg
THE CITY OF WINNIPEG
WATER AND WASTE DEPARTMENT

HURST PUMPING STATION
COOLING UPGRADES
HVAC CONTROL PANEL CP-M806
POWER DISTRIBUTION

CITY DRAWING NUMBER	SHEET	REV.	SIZE
1-0650M-A0041	001	0	A1

A1 SIZE - 594mm x 841mm

LAST SAVE: 2023/07/13 1:13 PM
PATH: C:\Users\mamam\AECOM\ELENS Romania - General\PROJECTS\Hurst Pumping Station HVACControl panel\Working\1-0650M-A0041 Power distribution.dwg