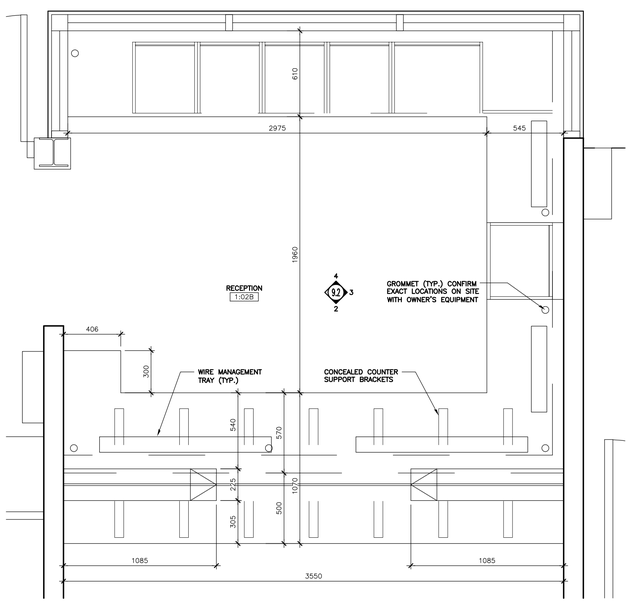

1 / A7.1 A9.2 RECEPTION 1:02B ENLARGED DESK PLAN
SCALE 1:20

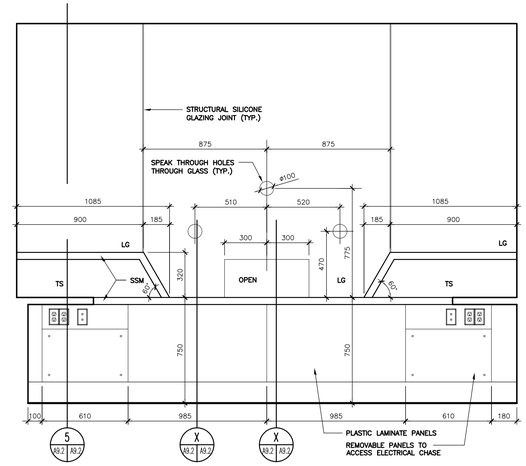

2 / A9.2 A9.2 RECEPTION 1:02B NORTH
SCALE 1 : 20

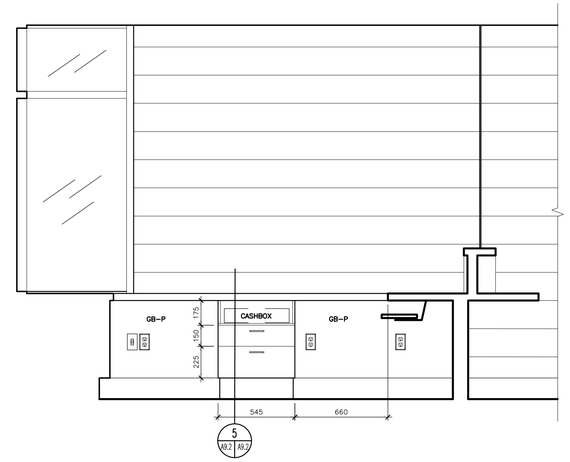

3 / A9.2 A9.2 RECEPTION 1:02B WEST
SCALE 1 : 20

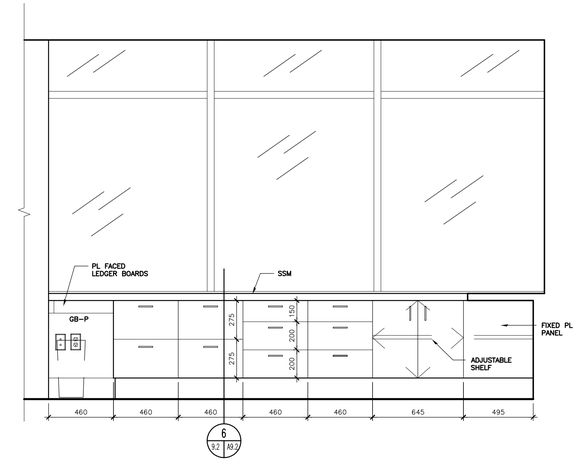

4 / A9.2 A9.2 RECEPTION 1:02B SOUTH
SCALE 1 : 20

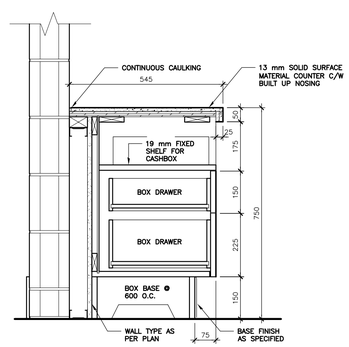

5 / A9.2 A9.2 DESK SECTION AT CASHBOX
SCALE 1 : 10

NOTE:
PLASTIC LAMINATE FACED CASEWORK AND SOLID SURFACE MATERIAL COUNTER

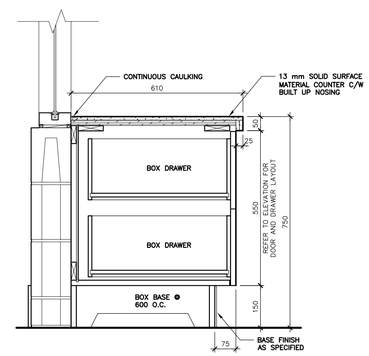

6 / A9.2 A9.2 DESK SECTION AT POOL GLAZING
SCALE 1 : 10

NOTE:
PLASTIC LAMINATE FACED CASEWORK AND SOLID SURFACE MATERIAL COUNTER

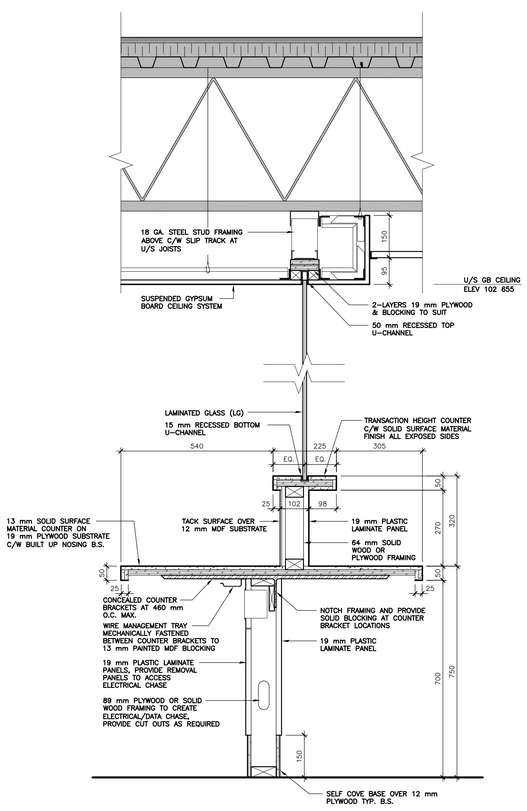

7 / A9.2 A9.2 DESK SECTION AT TRANSACTION COUNTER
SCALE 1 : 10

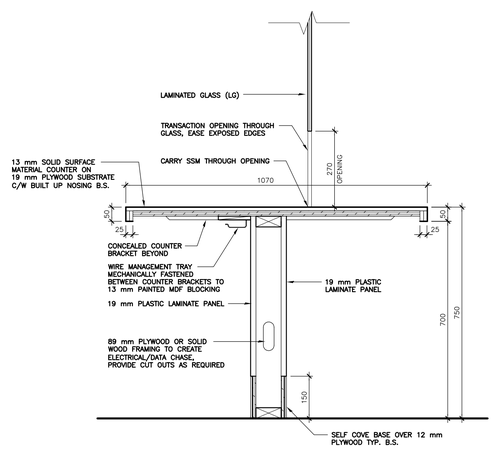

8 / A9.2 A9.2 DESK SECTION AT TRANSACTION OPENING
SCALE 1 : 10

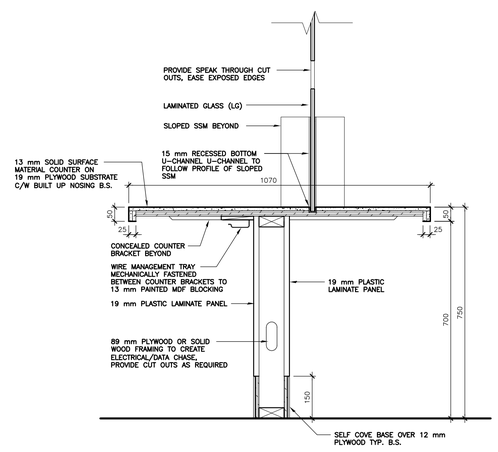

9 / A9.2 A9.2 DESK SECTION AT ACCESSIBLE COUNTER
SCALE 1 : 10

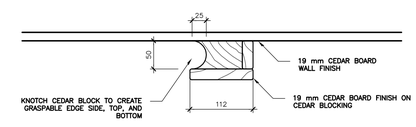

10 / A9.2 A9.2 SAUNA CEDAR GRABBAR
SCALE 1 : 5

No.	Date	Issue / Revision	By
0	22/12/2023	ISSUED FOR CONSTRUCTION	CF

Drawn By: DN

Printing Date: DEC. 22, 2023

PROVINCE OF MANITOBA — CASEY W. GREENHAM — 2023-12-22 — REGISTERED ARCHITECT

PROVINCE OF MANITOBA — LM ARCHITECTURAL GROUP — No. 032 — APPROVED PARTNERSHIP OF CORPORATIONS

Drawings and specifications, as instruments of service are the property of the architects, the copyright in the same being reserved to them. No reproduction may be made without the permission of the architects, and when made, must bear their names. All prints to be returned.

The contractor is to verify dimensions and data noted herein with conditions on the site and is held responsible for reporting any discrepancy to the architects for adjustment.

LM Architectural Group

500-136 Market Ave
Winnipeg Manitoba Canada R3B 0P4
t: (204) 942.0681 f: (204) 943.8676
www.lm-architects.com

CITY OF WINNIPEG
BONIVITAL POOL RENEWAL

1215 Archibald St, Winnipeg, MB.

RECEPTION DESK PLAN, ELEVATIONS & DETAILS

Comm. No.: 2129 Sheet: **A9.2**

Plotted on: 11-11-11