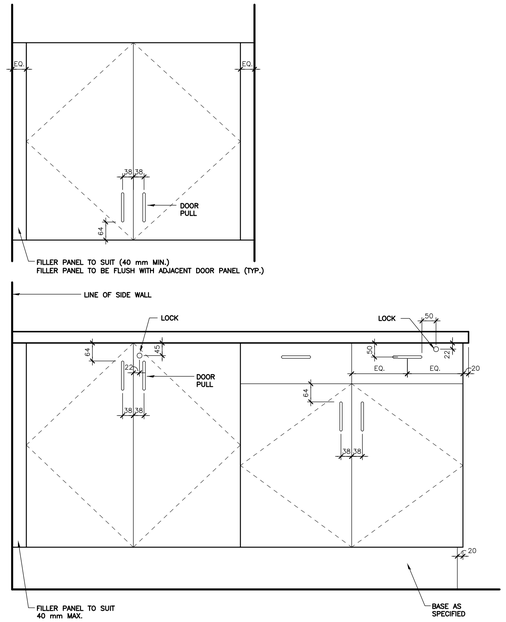

1 TYPICAL CABINET ELEVATION
-- A9.1 SCALE 1:10

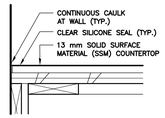

2 TYPICAL BACKSPLASH DETAIL
-- A9.1 SCALE 1:5

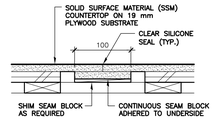

3 TYPICAL SEAM BLOCK DETAIL
-- A9.1 1:5

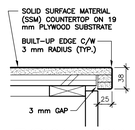

4 TYPICAL SSM EDGE DETAIL
-- A9.1 1:5

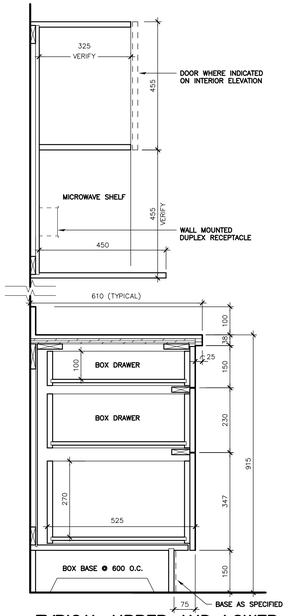

5 TYPICAL UPPER AND LOWER FOR BASEMENT STAFF LOUNGE
A8.5 A9.1 SCALE 1:10

NOTE:
PLASTIC LAMINATE FACED CASEWORK AND SOLID SURFACE MATERIAL COUNTER

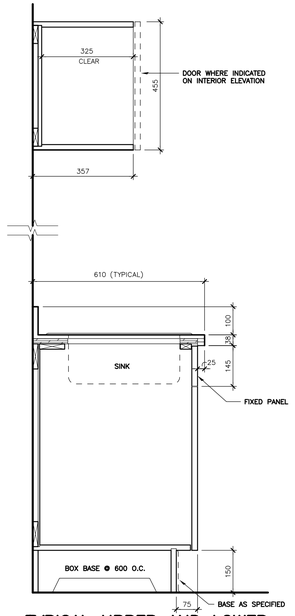

6 TYPICAL UPPER AND LOWER FOR BASEMENT STAFF LOUNGE
A8.5 A9.1 SCALE 1:10

NOTE:
PLASTIC LAMINATE FACED CASEWORK AND SOLID SURFACE MATERIAL COUNTER

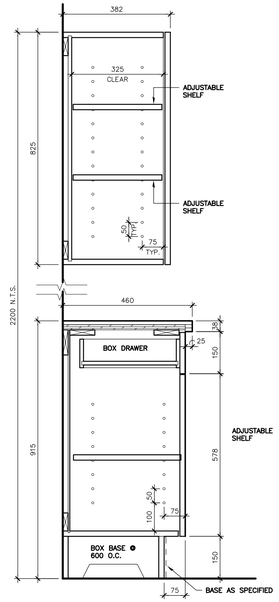

7 COPY AREA 1:08B MILLWORK
A8.2 A9.1 SCALE 1:10

NOTE:
PLASTIC LAMINATE FACED CASEWORK AND SOLID SURFACE MATERIAL COUNTER

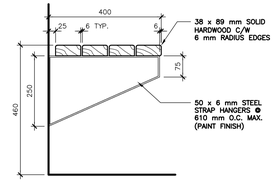

8 WALL MOUNTED BENCH DETAIL
A8.1 A9.1 SCALE 1:10

NOTE:
ANCHORAGE OF EACH STRAP ANCHOR TO HAVE 16 mm DIAMETER THREADED RODS W/ HILTI HIT HY70 ADHESIVE ANCHORS TOP AND BOTTOM

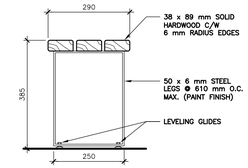

9 FREESTANDING BENCH DETAIL
A7.1 A9.1 SCALE 1:10

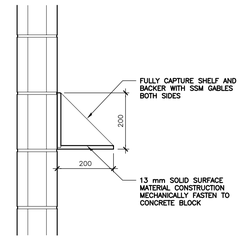

10 SSM SHELF DETAIL
A8.2 A9.1 SCALE 1:10

GENERAL MILLWORK NOTES:

1. ALL MILLWORK TO BE PLASTIC LAMINATE CONSTRUCTION UNLESS OTHERWISE INDICATED. REFER TO PROJECT MANUAL FOR TYPICAL CONSTRUCTION.
2. COUNTERTOPS SHALL BE CONTINUOUS WALL TO WALL UNLESS OTHERWISE INDICATED.
3. ALL SHELVES TO BE ADJUSTABLE UNLESS OTHERWISE INDICATED. REFER TO INTERIOR ELEVATION FOR QUANTITIES.
4. G.C. TO CONFIRM SIZES OF ALL APPLIANCES AND EQUIPMENT, (OFP, N.I.C. OR IN CONTRACT) LOCATED WITHIN MILLWORK PRIOR TO TIME OF FABRICATION.
5. PROVIDE GROMMETS IN COUNTERTOPS AT ALL LOCATIONS WHERE EQUIPMENT IS INDICATED.

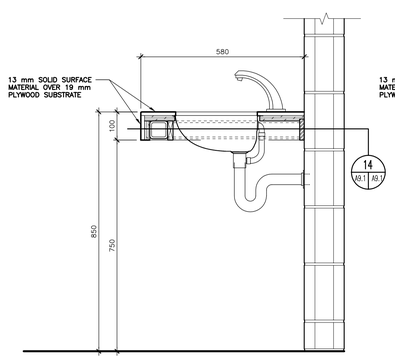

11 LAVATORY VERTICAL SECTION
A9.1 A9.1 SCALE 1:10

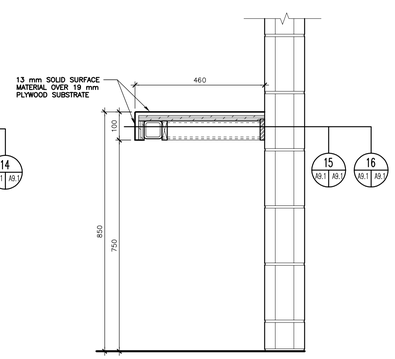

12 FAMILY CHANGE LOW GROOMING COUNTER
A9.1 A9.1 SCALE 1:10
NOTE: TYPICAL GROOMING COUNTER SIMILAR

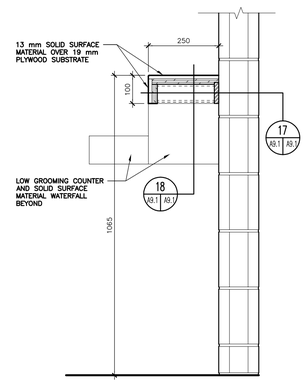

13 FAMILY CHANGE HIGH GROOMING COUNTER
A9.1 A9.1 SCALE 1:10

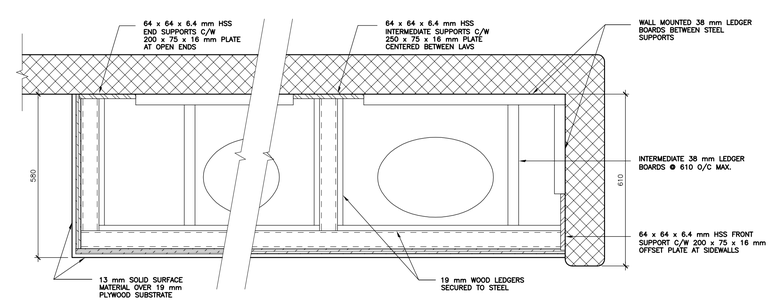

NOTE:
- ADJUST INTERMEDIATE STEEL SUPPORT LOCATIONS TO SUIT CMU CORE LOCATIONS.
- FILL CORES AT ALL SUPPORT LOCATIONS. ANCHORAGE OF EACH PLATE TO HAVE TWO 16 mm DIAMETER THREADED RODS W/ HILTI HIT HY70 ADHESIVE ANCHORS

14 LAVATORY PLAN SECTION
A9.1 A9.1 SCALE 1:10

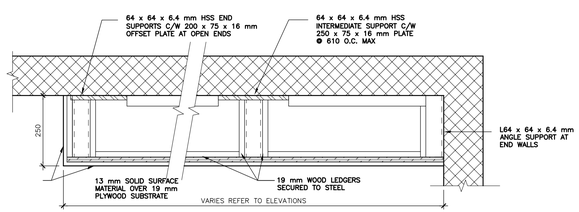

NOTE:
- ADJUST INTERMEDIATE STEEL SUPPORT LOCATIONS TO SUIT CMU CORE LOCATIONS.
- FILL CORES AT ALL SUPPORT LOCATIONS. ANCHORAGE OF EACH PLATE TO HAVE TWO 16 mm DIAMETER THREADED RODS W/ HILTI HIT HY70 ADHESIVE ANCHORS

15 TYPICAL GROOMING COUNTER PLAN SECTION
A9.1 A9.1 SCALE 1:10

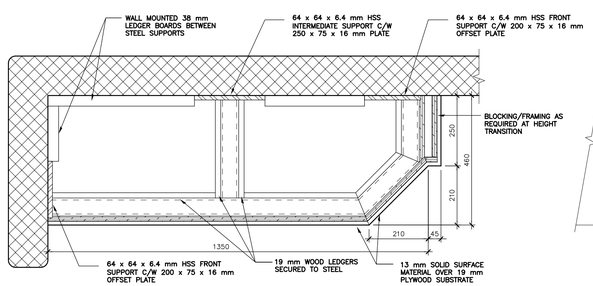

NOTE:
- ADJUST INTERMEDIATE STEEL SUPPORT LOCATIONS TO SUIT CMU CORE LOCATIONS.
- FILL CORES AT ALL SUPPORT LOCATIONS. ANCHORAGE OF EACH PLATE TO HAVE TWO 16 mm DIAMETER THREADED RODS W/ HILTI HIT HY70 ADHESIVE ANCHORS

16 FAMILY CHANGE LOW GROOMING COUNTER PLAN SECTION
A9.1 A9.1 SCALE 1:10

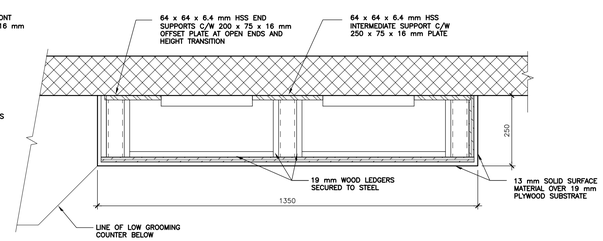

NOTE:
- ADJUST INTERMEDIATE STEEL SUPPORT LOCATIONS TO SUIT CMU CORE LOCATIONS.
- FILL CORES AT ALL SUPPORT LOCATIONS. ANCHORAGE OF EACH PLATE TO HAVE TWO 16 mm DIAMETER THREADED RODS W/ HILTI HIT HY70 ADHESIVE ANCHORS

17 FAMILY CHANGE HIGH GROOMING COUNTER PLAN SECTION
A9.1 A9.1 SCALE 1:10

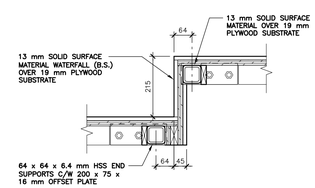

18 FAMILY CHANGE GROOMING COUNTER HEIGHT TRANSITION
A9.1 A9.1 SCALE 1:10

No.	Date	Issue / Revision	By
0	22/12/2023	ISSUED FOR CONSTRUCTION	CF

Drawn By: DN

Printing Date: DEC. 22, 2023

PROVINCE OF MANITOBA
COREY W. GREENHAM
2023-12-22
REGISTERED ARCHITECT

PROVINCE OF MANITOBA
LM ARCHITECTURAL GROUP
No. 052
APPROVED PARTNERSHIP OF CORPORATIONS

Drawings and specifications, as instruments of service are the property of the architects, the copyright in the same being reserved to them. No reproduction may be made without the permission of the architects, and when made, must bear their names. All prints to be returned.

The contractor is to verify dimensions and data noted herein with conditions on the site and is held responsible for reporting any discrepancy to the architects for adjustment.

LM Architectural Group

500-136 Market Ave
Winnipeg Manitoba Canada R3B 0P4
t: (204) 942.0681 f: (204) 943.8676
www.lm-architects.com

CITY OF WINNIPEG
BONIVITAL POOL RENEWAL

1215 Archibald St, Winnipeg, MB.

MILLWORK AND VANITY DETAILS

Comm. No.: 2129 Sheet: **A9.1**

Plotted on: ##-##-##