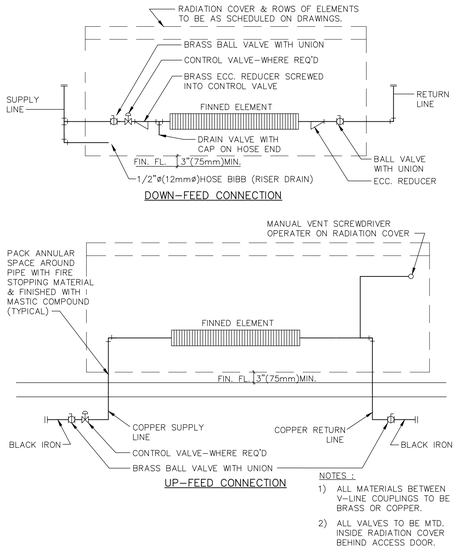

1 / M8.1 FINNED RADIATION PIPING DETAIL
SCALE: NTS

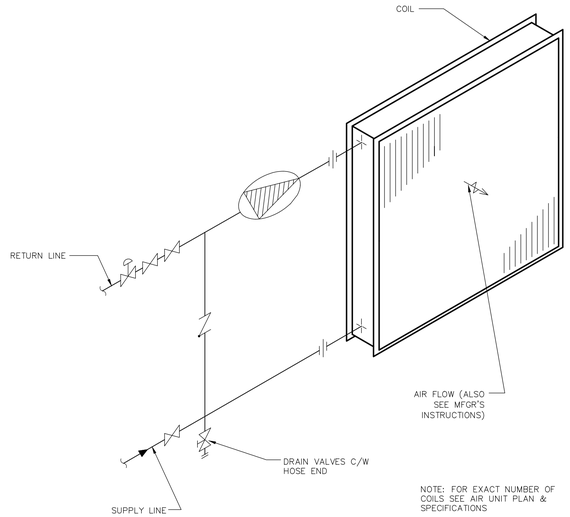

2 / M8.1 PUMPED HEATING COIL DETAIL
SCALE: NTS

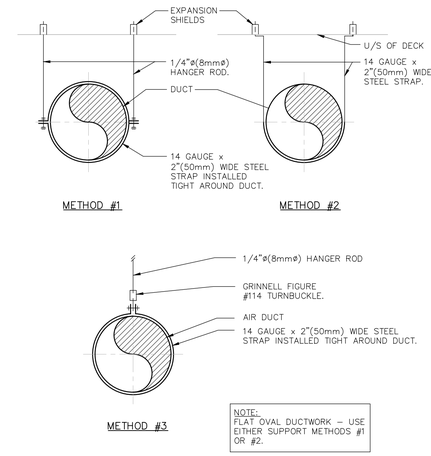

3 / M8.1 EXPOSED ROUND DUCT SUPPORT DETAIL
SCALE: NTS

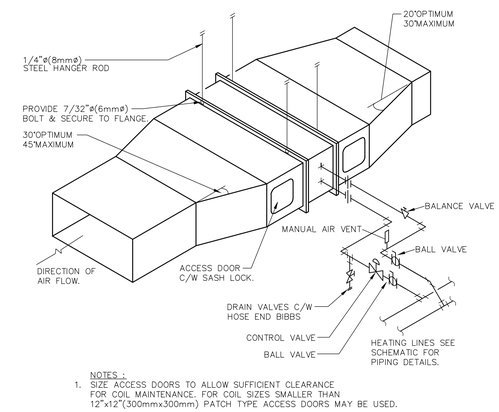

4 / M8.1 H.W. HEATING COIL DETAIL
SCALE: NTS

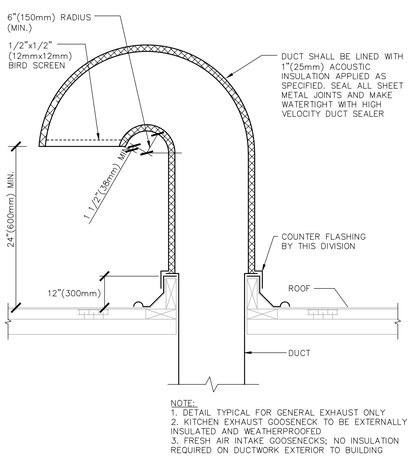

5 / M8.1 GOOSENECK DETAIL
SCALE: NTS

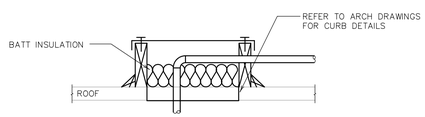

6 / M8.1 ROOF PENETRATION
SCALE: NTS

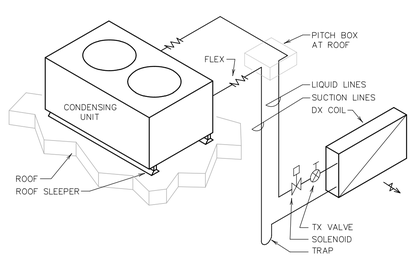

8 / M8.1 D.X. REFRIGERATION SYSTEM DETAIL (SINGLE CIRCUIT)
SCALE: NTS

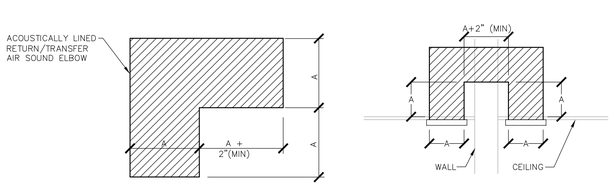

7 / M8.1 TRANSFER AIR DETAIL
SCALE: NTS

ENGINEERS
GEOSCIENTISTS
MANITOBA
Certificate of Authorization
MCW Consultants Ltd.
No. 7183

"THIS IS A PRINT OF A DOCUMENT THAT HAS BEEN ELECTRONICALLY AUTHENTICATED WITH TECHNOLOGY AUTHORIZED BY THE EGM. THE ORIGINAL IS IN ELECTRONIC FORM."

MCW Consultants Ltd.
13600
210-1921 Wellington Avenue
Winnipeg, Manitoba, R3H 0G4
Phone – (204) 775-7900
mcw_wpg@mcw.com
www.mcw.com

No.	Date	Issue / Revision	By
0	22/12/2023	ISSUED FOR CONSTRUCTION	JVL

Drawn By: EJ
Printing Date: 22/12/2023

PROVINCE OF MANITOBA
J.E. VAN LEEUWEN
Member 36282
REGISTERED PROFESSIONAL ENGINEER
2023-12-21

Drawings and specifications, as instruments of service are the property of the architects, the copyright in the same being reserved to them. No reproduction may be made without the permission of the architects, and when made, must bear their names. All prints to be returned.

The contractor is to verify dimensions and data noted herein with conditions on the site and is held responsible for reporting any discrepancy to the architects for adjustment.

LM Architectural Group
500-136 Market Ave
Winnipeg Manitoba Canada R3B 0P4
t: (204) 942.0681 f: (204) 943.8676
www.lm-architects.com

CITY OF WINNIPEG
BONIVITAL POOL RENEWAL

1215 Archibald St, Winnipeg, MB.

HVAC DETAILS

Comm. No.: 2129 Sheet: **M8.1**
Plotted on: