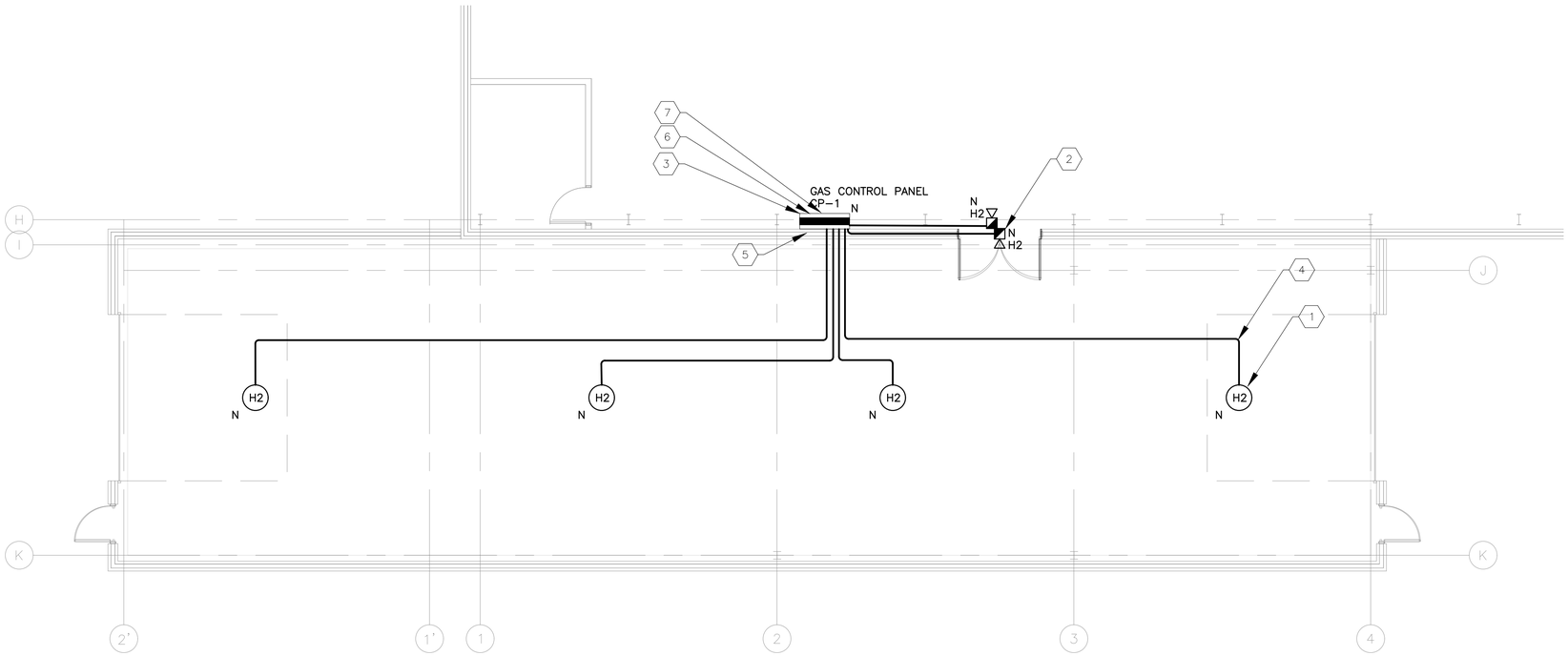

4 MAIN FLOOR PLAN - GAS DETECTION PLAN
1:75

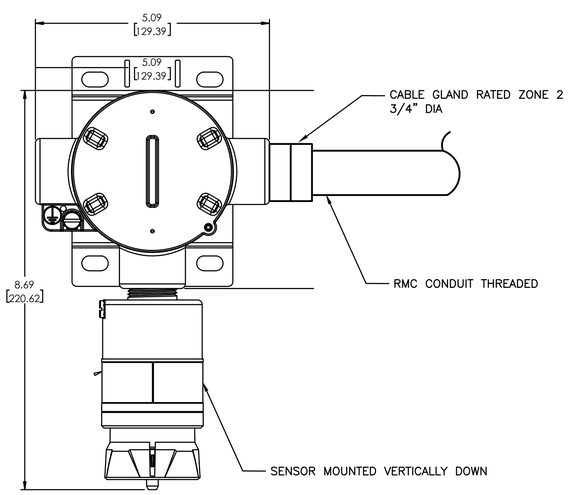

4.1 TYPICAL GAS DETECTOR INSTALLATION
NTS

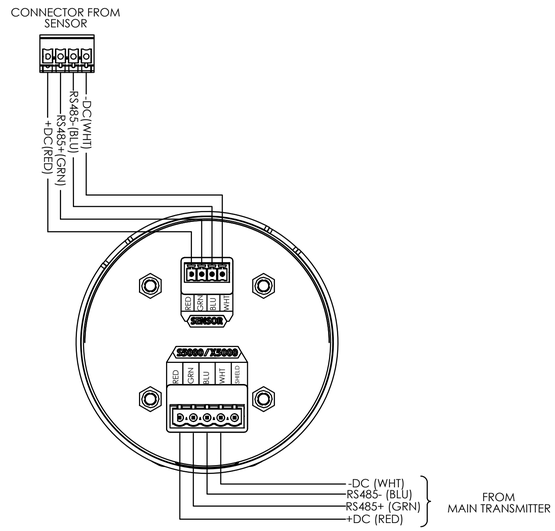

4.2 TYPICAL GAS DETECTOR WIRING DETAIL
NTS

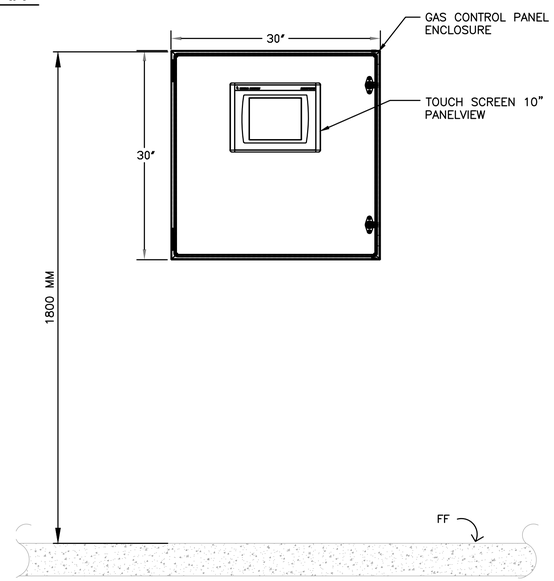

4.3 TYPICAL GAS CONTROL PANEL INSTALLATION
NTS

GENERAL NOTES

1. UNITS OF MEASUREMENTS ARE IN MILLIMETER (MM) UNLESS OTHERWISE STATED.
2. THIS GAS DETECTION SYSTEMS DRAWING SHALL BE READ IN CONJUNCTION WITH THE ELECTRICAL, MECHANICAL,ARCHITECTURAL, AND CIVIL DRAWINGS.
3. COORDINATE ALL SECTIONS OF THE WORK AND OBTAIN ALL NECESSARY PERMITS AS REQUIRED.
4. ALL WORK TO BE PERFORMED IN ACCORDANCE WITH THE LATEST APPLICABLE CANADIAN ELECTRICAL CODES, FIRE REGULATIONS AND OTHER CITY REQUIREMENTS.
5. VERIFY AND CONFIRM ALL DIMENSIONS ON SITE. VERIFY THE CEILING CLEARANCE OF 18" FROM THE CEILING AS ZONE 2 CLASSIFICATIONS AND REPORT ANY DISCREPANCIES TO THE ENGINEER BEFORE PROCEEDING WITH THE WORK.
6. FOR EXISTING CIRCUITING INFORMATION, REFER TO DRAWING EL5 PANELBOARD SCHEDULES EXISTING.
7. ANY WORK REQUIRED BY THE DRAWINGS OR REASONABLY NECESSARY TO COMPLETE THE WORK SHALL BE THE RESPONSIBILITY OF THE CONTRACTOR.
8. CONTRACTOR TO PROVIDE APPLICABLE FIRE STOPPING SEALANT FOR ALL WALL CONDUIT PENETRATIONS COMPLETE WITH NECESSARY SLEEVES.
9. CONDUCT LOCK OUT AND TAG OUT PROCEDURE FOR SYSTEMS REQUIRE FOR SHUTDOWN OPERATION.
10. PROVIDE SCHEDULE AND METHOD STATEMENT PROCEDURE OF THE DEMOLITION AND REPLACEMENTS OF ELECTRICAL ITEMS AFFECTED BY ZONE 2 CLASSIFICATION FOR CLIENT REVIEW.
11. ALL DEMOLISHED MATERIALS TO BE STORED IN THE DESIGNATED AREA BY THE CLIENT.
12. WHERE THE NEED OF SCAFFOLDINGS, INSTALL AND INSPECT THE SCAFFOLDING WORKS PRIOR TO USE AS PER HSE SAFETY PROCEDURES.
13. ALL SUPPLIED EQUIPMENT AND DEVICES SHALL BE NEW AND IN GOOD WORKING CONDITION.
14. REFER TO SPECIFICATIONS FOR THE TYPE OF H2 GAS DETECTORS AND CONTROLLERS.
15. MAINTAIN PROPER CLEARANCES WITH OTHER DISCIPLINE AS PER CODE.
16. PROVIDE APPROPRIATE PROTECTIONS OR COVERS TO EXISTING EQUIPMENT AND DEVICES IN THE GROUND PRIOR TO REMOVAL AND INSTALLATION WORKS IN THE CEILING.
17. THE ROUTING OF THE CONDUITS AND CABLING IN THESE DRAWINGS ARE FOR PRESENTATION ONLY AND MAY NOT REFLECT THE ACTUAL LOCATION. CONTRACTOR TO VERIFY THE ACTUAL FIELD CONDITIONS AND CONSIDER ALL ROUTING NECESSARY TO COMPLETE THE WORKS.

SHEET KEYNOTES

1. SUPPLY AND INSTALL NEW H2 GAS DETECTORS COMPLETE WITH APPLICABLE MOUNTING SUPPORTS IN THE CEILING. REFER TO MANUFACTURER MANUAL FOR PROPER TESTING AND INSTALLATION PROCEDURES. H2 GAS DETECTORS SHALL BE SPACED ACCORDING TO A DUAL, FACING-IN, 40'-FCBEB CONFIGURATION. THE OUTER H2 GAS DETECTORS SHALL BE INSTALLED ABOVE THE BUS EXHAUST. THE INNER H2 GAS DETECTORS SHALL BE INSTALLED ABOVE THE ON-BOARD HYDROGEN TANKS.
2. SUPPLY AND INSTALL NEW COMBINATION HORN AND STROBE FOR H2 GAS ALARM NOTIFICATION. REFER TO MANUFACTURER MANUAL FOR PROPER TESTING AND INSTALLATION PROCEDURES.
3. SUPPLY AND INSTALL NEW H2 GAS CONTROL PANEL NEAR THE EXISTING PANELBOARD. CONTRACTOR TO LOCATE THE PANEL WITH ALLOWABLE CLEARANCES, CABLE ROUTING AND ELEVATION.
4. SUPPLY AND INSTALL RMC THREADED CONDUIT, BOXES, SUPPORTS, GLANDS, SEAL AND FITTINGS RATED FOR ZONE 2 APPLICATION NECESSARY TO COMPLETE THE INSTALLATION. ALL CABLES TO BE AS PER THE SPECIFICATIONS.
5. SUPPLY AND INSTALL FIRE STOP SEALANTS FOR ALL CONDUITS PASSING THE FIRE RATED WALL. COORDINATE WITH STRUCTURAL PRIOR TO ANY CORE DRILLING.
6. CONNECT AND INTERFACE THE NEW H2 GAS CONTROL PANEL TO EXISTING JOHNSON CONTROL METASYS BMS VIA BACNET PROTOCOL. PROVIDE SET UP, CONFIGURATION AND PROGRAMMING TO OBTAIN SEAMLESS INTEGRATION.
7. PROVIDE H2 GAS NOTIFICATION STAGE 2 ALARM TO EXISTING FIRE ALARM SYSTEM. INSTALL NEW MONITOR MODULE AND CONNECT TO AVAILABLE H2 GAS COMMON ALARM CONTACT. REFER TO CONTROL PANEL SHOP DRAWINGS FOR MORE REFERENCE. CONDUCT FIRE VERIFICATION TESTING AND SUBMIT FIRE ALARM VERIFICATION REPORT TO ENGINEER FOR REVIEW.

ISSUED FOR TENDER

NOT FOR CONSTRUCTION

ENGINEERS GEOSCIENTISTS MANITOBA
Certificate of Authorization
Dillon Consulting Limited (MB)
No. 1789 Date: 2023.10.06

LOCATION UNDERGROUND STRUCTURES — APPROVED

SUPV. U/G STRUCTURES COMMITTEE — DATE

NOTE:
LOCATION OF UNDERGROUND STRUCTURES AS SHOWN ARE BASED ON THE BEST INFORMATION AVAILABLE, BUT NO GUARANTEE IS GIVEN THAT ALL EXISTING UTILITIES ARE SHOWN OR THAT THE GIVEN LOCATIONS ARE EXACT. CONFIRMATION OF EXISTENCE AND EXACT LOCATION OF ALL SERVICES MUST BE OBTAINED FROM THE INDIVIDUAL UTILITIES BEFORE PROCEEDING WITH CONSTRUCTION.

B.M. ELEV.

NO.	REVISIONS	DATE	BY
0	ISSUED FOR TENDER	2023/10/06	JCY

DESIGNED BY ABL
DRAWN BY ABL
CHECKED BY CAL
APPROVED BY CAL
HOR. SCALE 1:75
VERTICAL
DATE

DILLON CONSULTING

RELEASED FOR CONSTRUCTION
DATE OCTOBER 06, 2023

ENGINEER'S SEAL
PROVINCE OF MANITOBA
C.A. LANGE
Member
37791
2023/10/06
REGISTERED PROFESSIONAL ENGINEER

CONSULTANT PROJECT NO.
23-6412

Winnipeg
THE CITY OF WINNIPEG
TRANSIT DEPARTMENT

WINNIPEG TRANSIT
ARTIC ROOM MODIFICATIONS

CITY DRAWING NUMBER P-XXXX-
SHEET 17 OF 21

ELECTRICAL
PANEL SCHEDULES

CONSULTANT DRAWING NUMBER
EL4

C:\PW WORKING DIRECTORY\PROJECTS 2023\DILLON_402HL\DMS34625\EL04.DWG