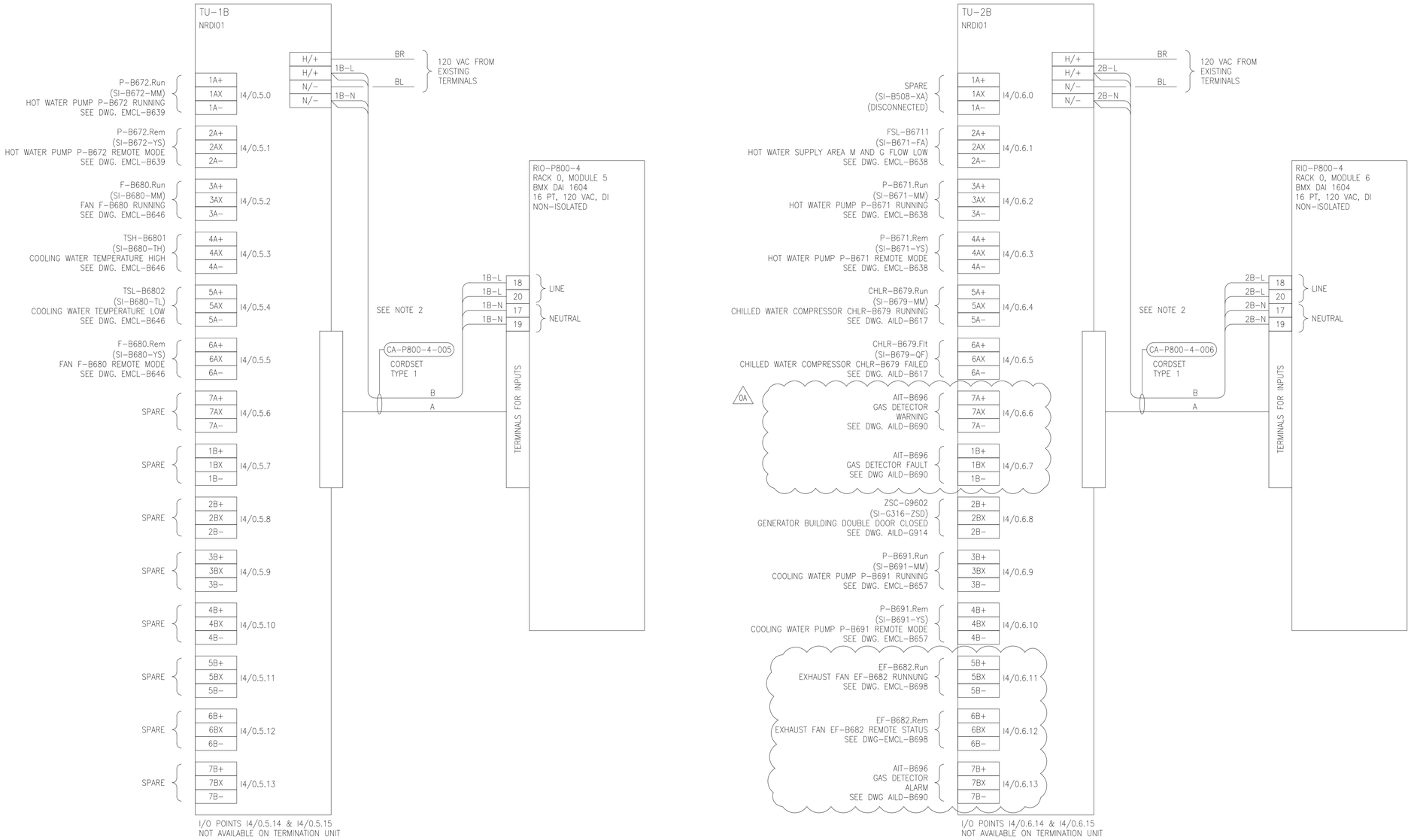

REFERENCE DRAWINGS	DESCRIPTION
1-0102-ADTL-A011	CORDSET ASSEMBLY DETAILS, CORDSET TYPE 1

NOTES:

1. PREVIOUS IO POINT IDENTIFIERS ARE SHOWN IN PARENTHESES.
2. REFER TO DRAWING 1-0102-ADTL-A011 FOR TYPE 1 CORDSET ASSEMBLY DETAILS.
3. EF-B682 FAULT IS A PROGRAMMED SOFTWARE ALARM. 0A

ENGINEERS GEOSCIENTISTS MANITOBA
Certificate of Authorization
Jacobs Consultancy Canada Inc.
No. 7801

NO.	REVISIONS	DATE	DESIGN	CHECK
0A	ISSUED FOR TENDER	2024/02/14	KP	VS
00	ISSUED FOR CONSTRUCTION - 976-2016	2017/04/05	MW	TMC

CH2MHILL. SNC-LAVALIN KGS GROUP CONSULTING ENGINEERS

DESIGNED BY: V.SIDHU	CHECKED BY: V.SIDHU
DRAWN BY: K.PUZIA	APPROVED BY: B.HASASNEH
SCALE: NTS	ISSUED FOR CONSTRUCTION BY:
DATE: 2024/02/14	DATE:
CONSULTANT NO.: 474248	

ENGINEER'S SEAL
PROVINCE OF MANITOBA
V.SIDHU
03-MARCH-2024
Member
36531
REGISTERED PROFESSIONAL ENGINEER

Winnipeg
THE CITY OF WINNIPEG
WATER AND WASTE DEPARTMENT

SOUTH END WATER POLLUTION CONTROL CENTRE
SEWPCC UPGRADING/EXPANSION PROJECT
AUTOMATION - WIRING DIAGRAM
SERVICE BUILDING
CP-B820-1 AND CP-B820-2, RIO-P800-4 - DISCRETE INPUTS

CITY DRAWING NUMBER	SHEET	REV.	SIZE
1-0102-ACBD-B003	003	0A	A1

PLOT DATE: Mar 01, 2024 - 3:05pm
FILE NAME:1-0102-ACBD-B003-003.dwg

A1 SIZE - 594mm x 841mm

LAST SAVE: 2024/03/01 - 3:05pm
PATH: C:\Users\sidhuv\OneDrive - Jacobs\Documents\1. SEWPCC\2. Chiller Replacement\7. New Elec Installation\Kasia\Updated Drawings From Kasia\IFC SET - PDF and CAD\All Drawings\To be revised again\1-0102-ACBD-B003-003.dwg