A1 SIZE – 594mm x 841mm

GENERAL NOTES:

1. DIMENSIONS IN MILLIMETERS.
2. READ STRUCTURAL DRAWINGS IN CONJUNCTION WITH ALL RELATED ARCHITECTURAL, MECHANICAL, PROCESS, AND ELECTRICAL DRAWINGS, EXISTING DRAWINGS AND OTHER CONTRACT DOCUMENTS.
3. SEE OTHER CONTRACT DRAWINGS AND COORDINATE FOR ACTUAL SIZES, LOCATIONS AND DETAILS OF OPENINGS FOR PIPES, SLEEVES, DUCTS, FLOOR DRAINS, CONDUITS, AND OTHER PENETRATIONS NOT SHOWN ON STRUCTURAL DRAWINGS.

DESIGN CRITERIA:

1. APPLICABLE CODE 2020 NATIONAL BUILDING CODE W/2023 MANITOBA AMENDMENTS.
2. IMPORTANCE CATEGORY: NORMAL (EXISTING STRUCTURE)
   NEW WORK DESIGNED AS POST DISASTER
   I_S(ULS) =1.25
   I_S(SLS) =0.9
3. SITE LOCATION: WINNIPEG, MANITOBA
4. SEISMIC DATA (2%/50 YEARS PROBABILITY):
   SITE CLASS E
   $S_a(0.2)$ =0.113
   $S_a(0.5)$ =0.107
   $S_a(1.0)$ =0.055
   $S_a(2.0)$ =0.0216
   $S_a(5.0)$ =0.00434
   $S_a(10.0)$ =0.00126
   PGA =0.0679
   PGV =0.0544

CONCRETE AND CONCRETE REINFORCING:

1. CONFORM TO THE REQUIREMENTS OF CSA STANDARD A23.1 FOR ALL SUPPLY, PLACING, CURING, FORMING AND TEMPERATE PROTECTION OF CONCRETE WORK.
2. ALL CONCRETE IS TO BE NORMAL DENSITY WITH C1 EXPOSURE CLASS AND A MINIMUM 28 DAY STRENGTH OF 35 MPa.
3. REINFORCING BARS:
   CAN/CSA–G30.18, GRADE 400R, GRADE 400W FOR WELDED REBARS.
4. FABRICATE AND PLACE REINFORCING STEEL IN ACCORDANCE WITH RSIC MANUAL OF STANDARD PRACTICE, UNLESS NOTED OTHERWISE.
5. SUBMIT SHOP DRAWINGS OF REINFORCING STEEL FOR REVIEW PRIOR TO FABRICATION.
6. PROVIDE FOLLOWING CLEAR COVER FOR REINFORCING STEEL:

   CONCRETE CAST AGAINST EARTH – 75mm
   ALL OTHERS – 50mm

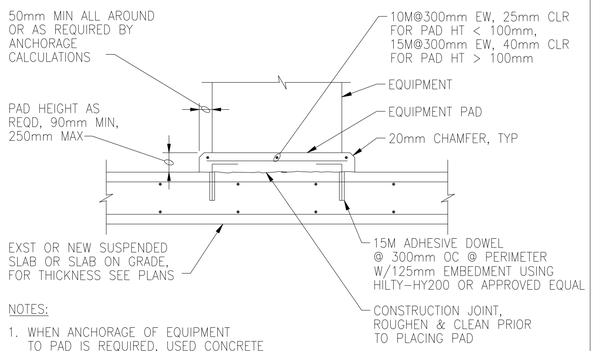

NOTES:

1. WHEN ANCHORAGE OF EQUIPMENT TO PAD IS REQUIRED, USED CONCRETE ANCHORS SPECIFIED.
2. CONCRETE PADS FOR ELECTRICAL EQUIPMENT SHALL BE 90mm HIGH, UNLESS NOTED OTHERWISE.

TYPE E

GENERAL NOTE:
FOR GENERAL NOTES SEE DETAIL 3 OF 3.

CONCRETE EQUIPMENT PAD – TYPE E

NTS

DETAIL 1 OF 3

0330–056

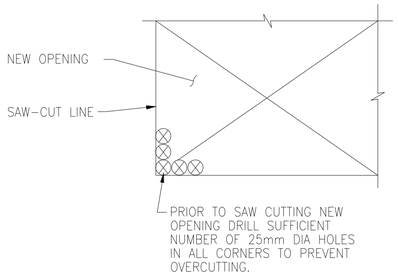

EXISTING WALL ELEVATION OR SLAB PLAN DETAIL

NOTES:

1. LOCATED ANY EXISTING UTILITIES THAT WERE AFFECTED WITH DEMOLITION. REPORTED TO THE ENGINEER IF ANY UTILITIES WERE FOUND.
2. STAYED WITHIN LIMITS OF OPENING, DO NOT OVERCUT.
3. BURNED BACK EXPOSED REINFORCING 25mm AND DRY PACK WITH NON SHRINK GROUT.
4. REFER TO DETAIL 0330–143.

NEW OPENING THROUGH EXISTING WALL OR SLAB

NTS

0330–808

NOTES:

1. PAD SIZE SHALL BE MINIMUM INDICATED OR AS SHOWN ON THE PLANS OR AS INDICATED BY THE MANUFACTURER AND APPROVED BY THE CONTRACT ADMINISTRATOR.
2. THE SIZE, NUMBER, TYPE, LOCATION, AND THREAD PROJECTION OF THE ANCHOR BOLTS SHALL BE DETERMINED BY THE EQUIPMENT MANUFACTURER AND AS APPROVED BY THE ENGINEER. ANCHOR BOLTS SHALL BE HELD IN POSITION WITH A TEMPLATE OR OTHER ACCEPTABLE MEANS, MATCHING THE BASE PLATE, WHILE PAD IS BEING PLACED.
3. ANCHOR BOLT SLEEVES SHALL BE USED TO PROVIDE MINIMUM ANCHOR BOLT MOVEMENT OF 13mm IN ALL HORIZONTAL DIRECTIONS. THE MINIMUM SLEEVE LENGTH SHALL BE 8 TIMES THE BOLT DIAMETER.
4. ANCHOR BOLT SLEEVES SHALL HAVE A MINIMUM INTERNAL DIAMETER 25mm GREATER THAN BOLT DIAMETER AND A MAXIMUM INTERNAL DIAMETER 75mm GREATER THAN ANCHOR BOLT DIAMETER. SLEEVES SHALL BE FILLED WITH NON–SHRINK GROUT AFTER BOLTS ARE ALIGNED. SEE 0330–057.
5. EQUIPMENT BASES SHALL BE INSTALLED LEVEL UNLESS INDICATED OTHERWISE.
6. WEDGES, SHIMS, OR LEVELING NUTS SHALL BE USED TO SUPPORT THE BASE WHILE THE GROUT IS PLACED. WEDGES OR SHIMS SHALL BE REMOVED AFTER GROUT IS SET AND PACK VOID WITH GROUT.
7. HEIGHT OF PADS SHALL BE MINIMUM REQUIRED FOR ANCHOR BOLT CLEARANCE TO KEEP ANCHOR BOLT ABOVE SUPPORTING SLAB (SEE TABLE BELOW). WHERE EQUIPMENT OR PIPING ELEVATION REQUIRE A PAD HEIGHT LESS THAN THE MINIMUM SHOWN, USE TYPE "B" EQUIPMENT PAD WITH BLOCKOUT.
8. AT CONTRACTOR'S OPTION, CONCRETE ANCHORS MAY BE USED IN LIEU OF CAST–IN–PLACE ANCHOR BOLTS FOR EQUIPMENT ANCHOR BOLTS LESS THAN 20mm DIAMETER WHEN APPROVED BY THE EQUIPMENT MANUFACTURER AND APPROVED BY THE CONTRACT ADMINISTRATOR. ANCHORS SHALL BE INSTALLED WITH 100mm MINIMUM EDGE DISTANCE IN EACH DIRECTION.

AB DIA (mm)	12	16	20	22	25	33	35	38	44	50
MIN PAD HT (mm)	175	215	250	275	320	380	420	450	535	600

CONCRETE EQUIPMENT PAD – NOTES

NTS

DETAIL 3 OF 3

0330–056

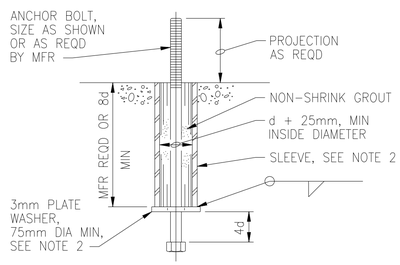

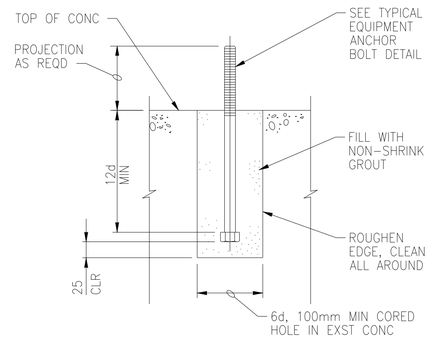

ANCHOR BOLT RETROFIT

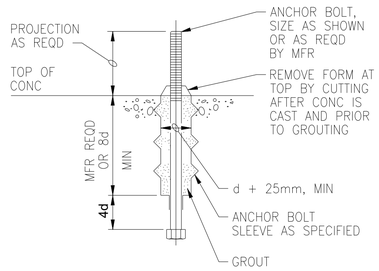

MACHINERY ANCHOR BOLT DETAIL

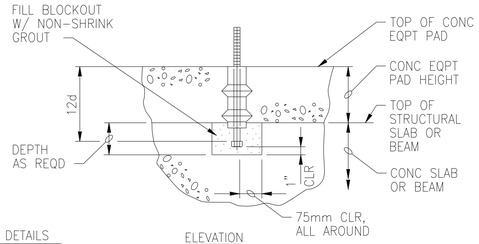

ELEVATION

ANCHOR BOLT BLOCKOUT

NOTES:

1. FOR CONCRETE EQUIPMENT PAD DETAILS AND NOTES NOT SHOWN SEE 0330–056
2. MATERIAL TO MATCH BOLT.

ANCHOR BOLT DETAILS

NTS

0330–057

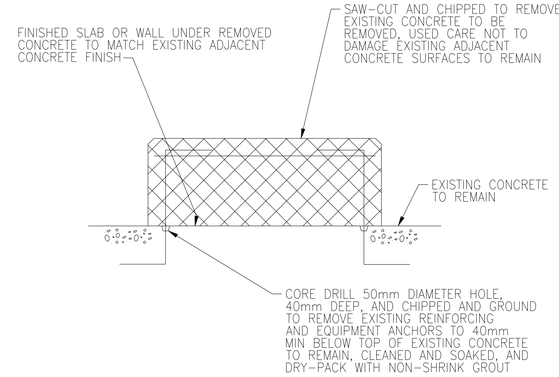

NOTES:

1. REMOVED CONCRETE OUT TO SOUND CONCRETE.
2. IF CHIPPING INTO THE SURFACE OF THE EXISTING SLAB OR WALL TO REMAIN WAS REQUIRED, MADE EDGES PERPENDICULAR TO THE SURFACE. DO NOT FEATHER EDGES.
3. FILLED DEFECTIVE AREA WITH NON–SHRINK GROUT OR AN APPROVED PREPACKAGED PATCHING MATERIAL TO MATCHED APPREARANCE OF ADJACENT CONCRETE SURFACES.
4. USED APPROVED BONDING AGENT ON SURFACES TO BE PATCHED PRIOR TO PLACING NON–SHRINK GROUT.
5. DEMONSTRATED METHODS FOR REPAIR USING ACTUAL MATERIALS, METHODS, AND CURING PROCEDURES REQUIRED BY MATERIAL MANUFACTURERS. CONSULT WITH BONDING AGENT MANUFACTURER AND NON–SHRINK GROUT MANUFACTURER ON TECHNIQUES.

CONCRETE DEMOLITION

NTS

0330–143

©CH2M HILL 2017. ALL RIGHTS RESERVED.

ENGINEERS GEOSCIENTISTS MANITOBA
Certificate of Authorization
Jacobs Consultancy Canada Inc.
No. 7801

NO.	REVISIONS	DATE	DESIGN	CHECK
00	ISSUED FOR TENDER	2024/02/14	J.T.	E.L.

JACOBS

DESIGNED BY: J.THANNICKAL	CHECKED BY: E.LUI
DRAWN BY: K.PUZIA	APPROVED BY: B.HASASNEH
SCALE: NTS	ISSUED FOR CONSTRUCTION BY:
DATE: 2024/02/14	DATE:
CONSULTANT NO.: 474248	

ENGINEER'S SEAL
PROVINCE OF MANITOBA
S.L.E.
Member 37003
REGISTERED PROFESSIONAL ENGINEER
2024-02-15

Winnipeg
THE CITY OF WINNIPEG
WATER AND WASTE DEPARTMENT

SOUTH END WATER POLLUTION CONTROL CENTRE
SEWPCC B679 CHILLER REPLACEMENT PROJECT
SERVICE BUILDING
STRUCTURAL
STANDARD DETAILS

CITY DRAWING NUMBER	SHEET	REV.	SIZE
1–0102–SDTL–A008	001	00	A1

FILE NAME: 1–0102–SDTL–A008.dwg