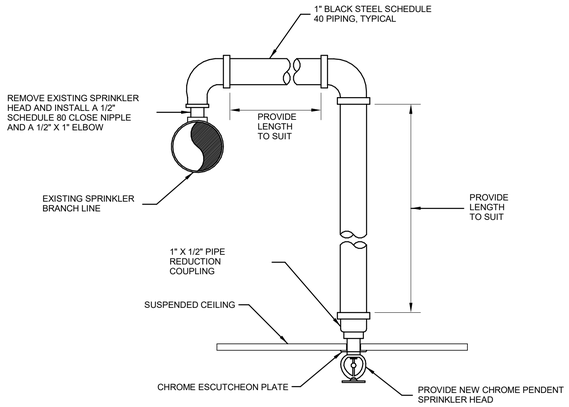

NOTES

1. ADJUST SPRINKLER DROPS AS NECESSARY TO CLEAR OBSTRUCTIONS SUCH AS THE CEILING "T" BAR SUSPENSION SYSTEM, LIGHT FIXTURES, ETC. PROVIDE A PIPE HANGER IF THE HORIZONTAL OFFSET LENGTH EXCEEDS 24 INCHES.
2. THIS SPRINKLER HEAD DROP IS APPLICABLE ONLY WHERE IT IS NOT NECESSARY TO RETAIN AN UPRIGHT SPRINKLER FOR PROTECTION OF COMBUSTIBLE CONSTRUCTION ABOVE THE CEILING.

SPRINKLER HEAD REVERSE BEND DETAIL

SCALE: N.T.S.

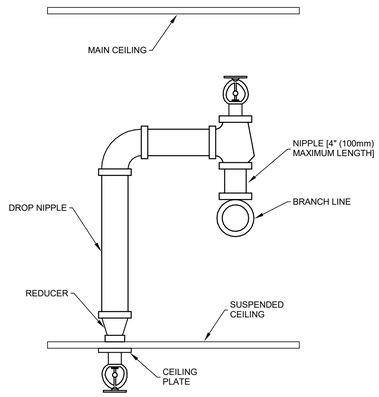

SPRINKLER HEAD IN CONCEALED SPACE AND BELOW CEILING DETAIL

SCALE: N.T.S.

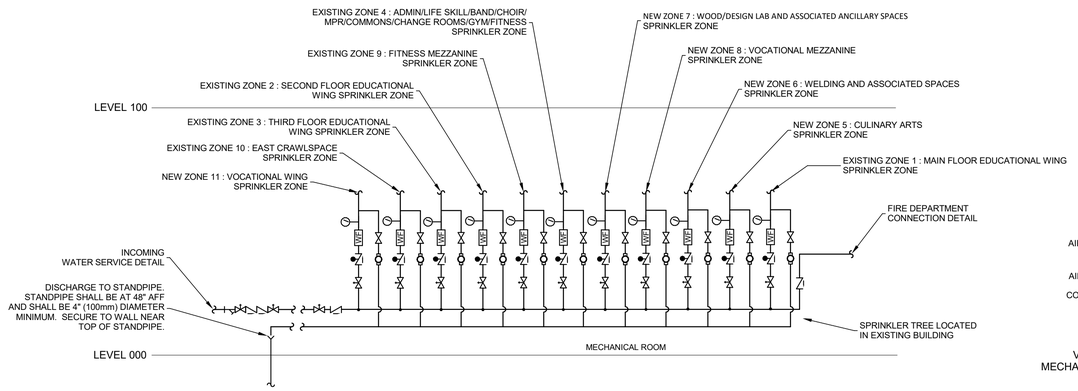

FIRE PROTECTION SCHEMATIC

SCALE: N.T.S

	DRY PIPE VALVE WITH QUICK OPENING DEVICE

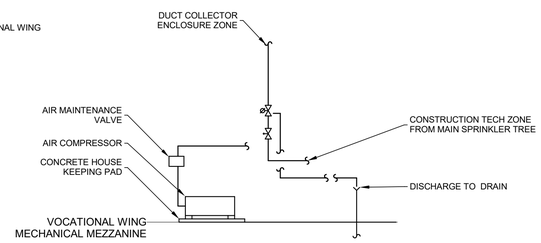

TAIL END DRY ZONE

SCALE: N.T.S

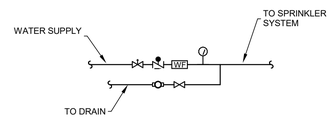

SYMBOLS LEGEND

	OS&Y VALVE (RISING STEM)
	ALARM CHECK VALVE
WF	FLOW DETECTOR / SWITCH
	PRESSURE GAUGE
	SITE GLASS
	VALVES (GENERAL)

WET SPRINKLER ZONE

SCALE: N.T.S

ENGINEERS GEOSCIENTISTS MANITOBA

Certificate of Authorization

Epp Siepman Engineering Inc.

No. 4035

This is a print of a document that has been electronically authenticated with technology authorized by the Engineers Geoscientists Manitoba. The original is in electronic form.

epp siepman engineering

400 - 136 Market Avenue
Winnipeg, MB R3B 0P4
T 204 453 1080

LM esp

LM Architectural Group | Environmental Space Planning

500-136 Market Avenue Winnipeg, Manitoba Canada R3B 0P4
t: 204.942.0681 lm-esp.ca

No.	REVISION/DESCRIPTION	BY	DATE
0	ISSUED FOR CONSTRUCTION	JS/MP	24-04-01

SEAL

PROVINCE OF MANITOBA
J.D. SCHELLENBERG
Member
31336
2024-04-04
REGISTERED PROFESSIONAL ENGINEER

EB	JS	JS	JS
DRAWN	CHECKED	DESIGNED	APPROVED
DATE 2024-04-01	USER APPROVAL		

Winnipeg

THE CITY OF WINNIPEG
ASSETS & PROJECT MANAGEMENT DEPARTMENT
MUNICIPAL ACCOMMODATIONS DIVISION
3-65 GARRY STREET, R3C 4K4

PROJECT

PEMBINA TRAILS COLLEGIATE
VOCATIONAL WING
TENDER NO. 954-2023B

50 FRONTIER TRAIL, WINNIPEG, MANITOBA, R3Y 2H1

SHEET TITLE

Details - Fire Protection Plan

SCALE	PROJECT No:	SHEET No:
1 : 1	2020-127	MF4.1

DRAWING SHEET SIZE: A1 (594x841) PLOT 1:1

ESE 24049