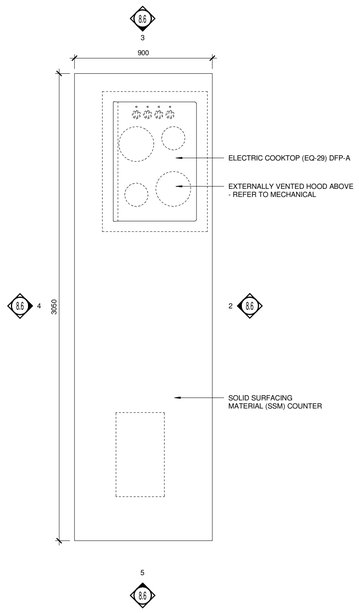

1 PLAN - FOOD & NUTRITION 1:007 TEACHING STATION
SCALE 1 : 20

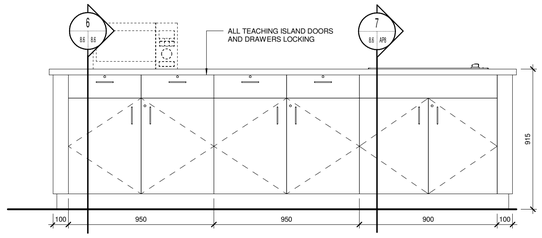

2 BACK ELEVATION
FOOD & NUTRITION 1:107 TEACHING STATION
SCALE 1 : 20

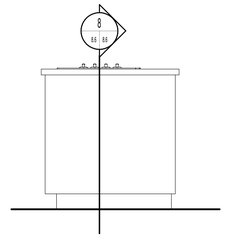

3 SIDE ELEVATION
FOOD & NUTRITION 1:107 TEACHING STATION
SCALE 1 : 20

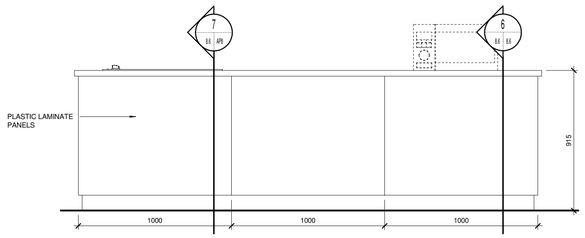

4 FRONT ELEVATION
FOOD & NUTRITION 1:107 TEACHING STATION
SCALE 1 : 20

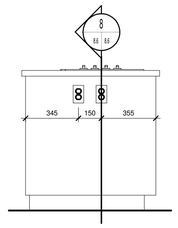

5 SIDE ELEVATION
FOOD & NUTRITION 1:107 TEACHING STATION
SCALE 1 : 20

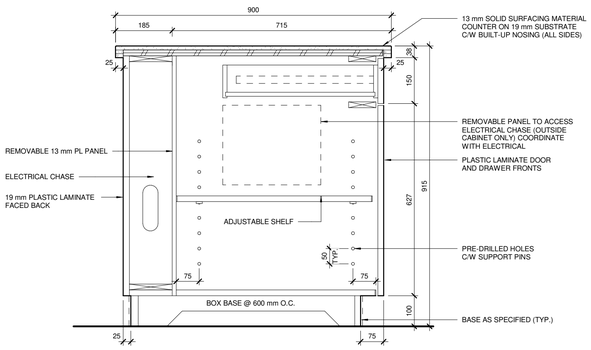

6 MILLWORK SECTION
FOOD & NUTRITION 1:107 TEACHING STATION
SCALE 1 : 10

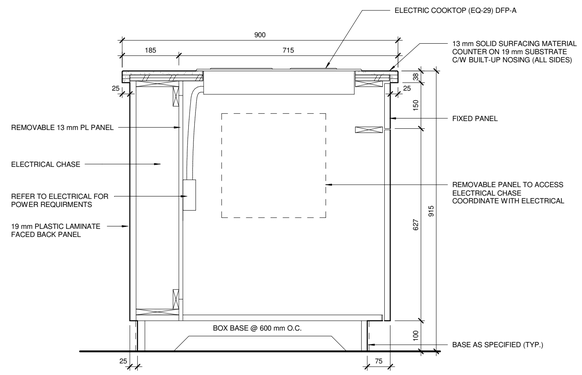

7 MILLWORK SECTION
FOOD & NUTRITION 1:107 TEACHING STATION
SCALE 1 : 10

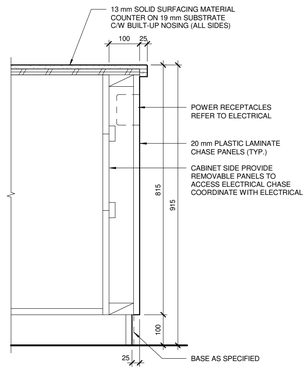

8 MILLWORK SECTION
FOOD & NUTRITION 1:107 TEACHING STATION
SCALE 1 : 10

LM esp
LM Architectural Group | Environmental Space Planning
500-136 Market Avenue Winnipeg, Manitoba Canada R3B 0P4
t: 204.942.0681 lm-esp.ca

No.	REVISION/DESCRIPTION	BY	DATE
0	ISSUED FOR CONSTRUCTION	JT	04.01.24

SEAL

PROVINCE OF MANITOBA — LM ARCHITECTURAL GROUP — No. 052 — APPROVED PARTNERSHIP OF CORPORATIONS

PROVINCE OF MANITOBA — JONATHAN D. TRENHOLM — REGISTERED ARCHITECT

2024-04-02

TM DRAWN	TM CHECKED	TM DESIGNED	JT APPROVED
DATE 2024.04.01	USER APPROVAL		

Winnipeg

THE CITY OF WINNIPEG
ASSETS & PROJECT MANAGEMENT DEPARTMENT
MUNICIPAL ACCOMMODATIONS DIVISION
3-65 GARRY STREET, R3C 4K4

PROJECT

PEMBINA TRAILS COLLEGIATE
VOCATIONAL WING
TENDER NO. 954-2023B
50 FRONTIER TRAIL, WINNIPEG, MANITOBA, R3Y 2H1

SHEET TITLE

ENLARGED MILLWORK PLANS, ELEVATIONS, SECTIONS & DETAILS

SCALE	PROJECT No:	SHEET No:
As indicated	2020-127	A8.6