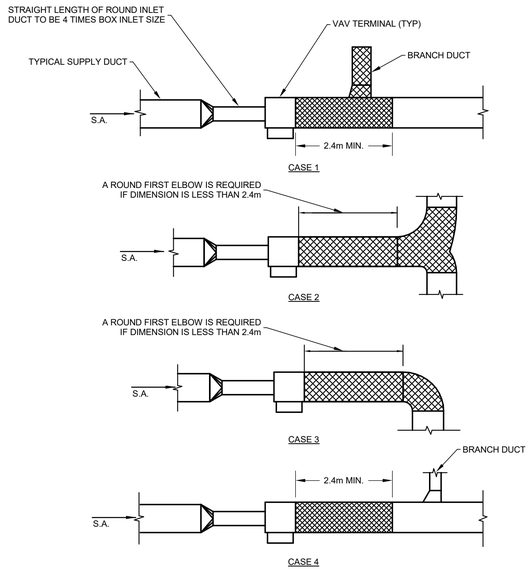

VAV TERMINAL ACOUSTIC INSULATION DETAIL

SCALE: N.T.S.

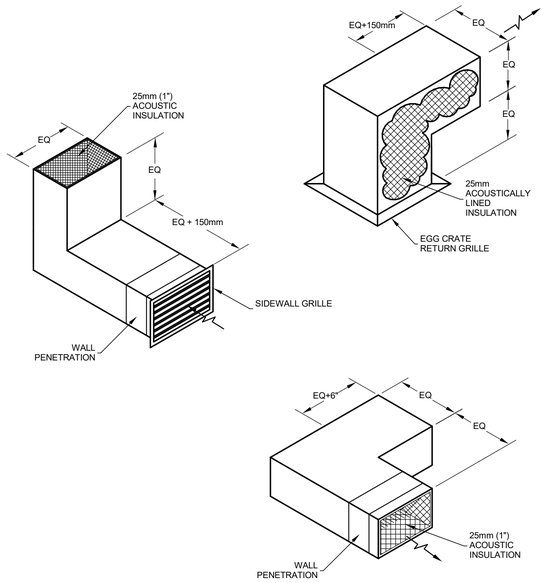

TYPICAL ACOUSTIC ELBOW DETAIL

SCALE: N.T.S.

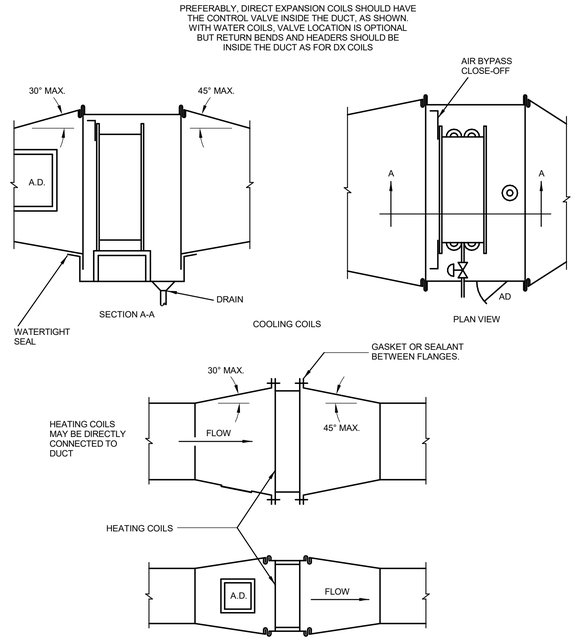

REMOTE HEATING AND COOLING COIL INSTALLATION DETAIL

SCALE: N.T.S.

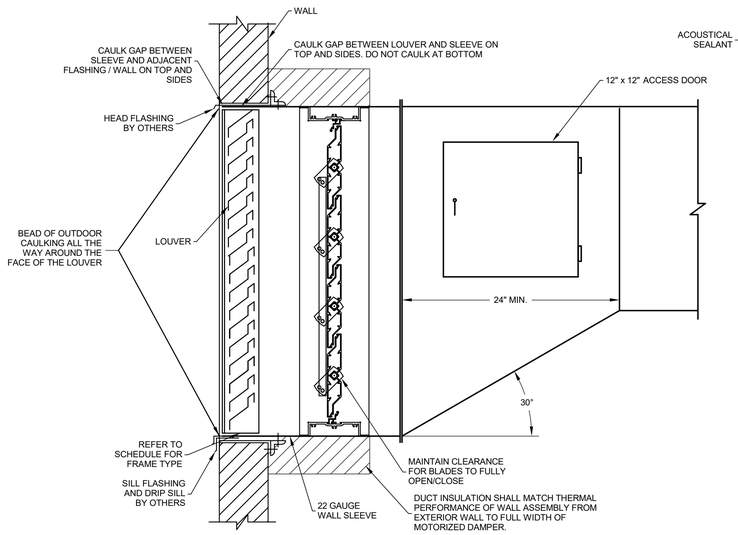

NOTES

1. DO NOT ATTACH DUCT TO TOP OF LOWER LOUVER BLADE AS TYPICAL. THIS CREATES SEALING PROBLEMS AT MULLIONS AND OTHER VERTICAL MEMBERS
2. SEAL ALL JOINTS WATER TIGHT AT BOTTOM OF DUCT AND SLEEVE.
3. INSULATE DUCT AND SLEEVE AS SPECIFIED.

LOUVER WITH INSULATED MOTORIZED DAMPER DETAIL

SCALE: N.T.S

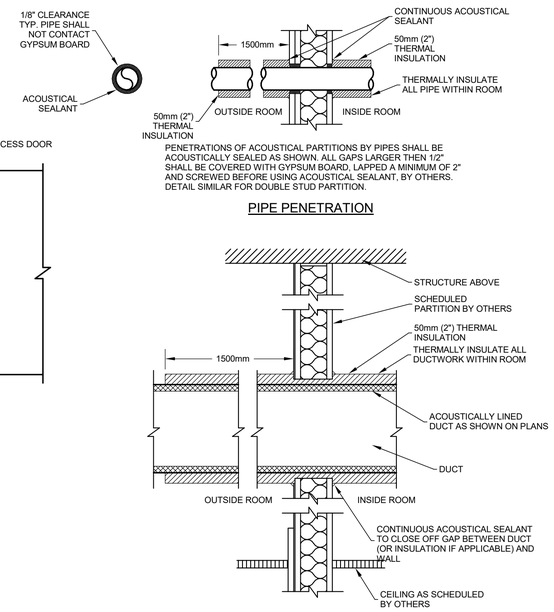

DUCT / PIPE PENETRATIONS THROUGH WALLS RATED STC 45 OR HIGHER

SCALE: N.T.S.

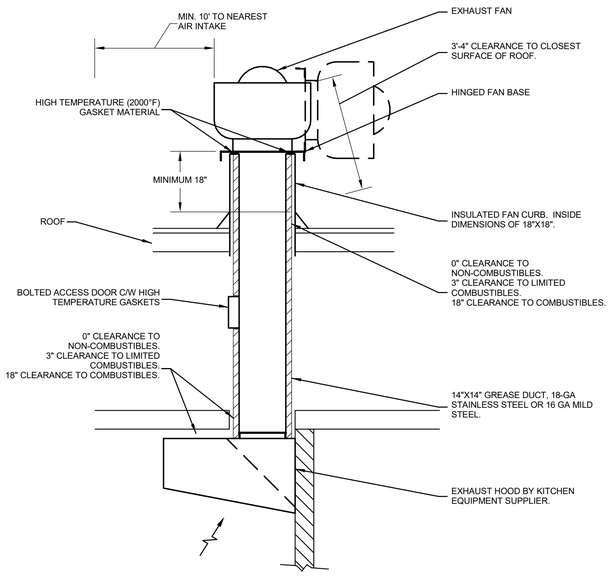

COMMERCIAL KITCHEN EXHAUST DETAIL

SCALE: N.T.S.

ENGINEERS GEOSCIENTISTS MANITOBA

Certificate of Authorization

Epp Siepman Engineering Inc.

No. 4035

This is a print of a document that has been electronically authenticated with technology authorized by the Engineers Geoscientists Manitoba. The original is in electronic form.

epp siepman engineering

400 - 136 Market Avenue
Winnipeg, MB R3B 0P4
T 204 453 1080

LM esp

LM Architectural Group | Environmental Space Planning
500-136 Market Avenue Winnipeg, Manitoba Canada R3B 0P4
t: 204.942.0681 lm-esp.ca

No.	REVISION/DESCRIPTION	BY	DATE
0	ISSUED FOR CONSTRUCTION	JS/MP	24-04-01

SEAL

PROVINCE OF MANITOBA
J. S. SCHELLENBERG
Member
31336
2024-04-08
REGISTERED PROFESSIONAL ENGINEER

EB	JS	JS	JS
DRAWN	CHECKED	DESIGNED	APPROVED

DATE 2024-04-01 USER APPROVAL

Winnipeg

THE CITY OF WINNIPEG
ASSETS & PROJECT MANAGEMENT DEPARTMENT
MUNICIPAL ACCOMMODATIONS DIVISION
3-65 GARRY STREET, R3C 4K4

PROJECT

PEMBINA TRAILS COLLEGIATE
VOCATIONAL WING
TENDER NO. 954-2023B

50 FRONTIER TRAIL, WINNIPEG, MANITOBA, R3Y 2H1

SHEET TITLE

Details - HVAC 3

SCALE	PROJECT No:	SHEET No:
1 : 1	2020-127	MH4.3

DRAWING SHEET SIZE: A1 (594x841) PLOT 1:1

ESE 24049