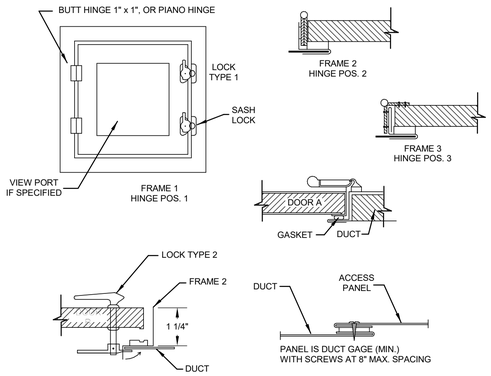

	DOOR SIZE	NO. HINGES	NO. LOCKS	METAL GAGE		
				FRAME	DOOR	BACK
2" W.G. STATIC AND LESS	12" x 12" 16" x 20" 24" x 24"	2 2 3	1-S 2-S 2-S	24 22 22	26 24 22	26 26 26
3" W.G. STATIC	12" x 12" 16" x 20" 24" x 24"	2 2 3	1-S 1-S,1-T,1-B 2-S,1-T,1-B	22 20 20	22 20 20	26 26 24
4" W.G. TO 10" W.G.	12" x 12" 16" x 20" 24" x 24"	2 3 3	1-S,1-T,1-B 2-S,1-T,1-B 2-S,2-T,2-B	20 18 18	20 18 18	26 24 24
S = SIDE OPPOSITE HINGES, T = TOP, B = BOTTOM						

DUCT ACCESS DOOR DETAIL

SCALE: N.T.S.

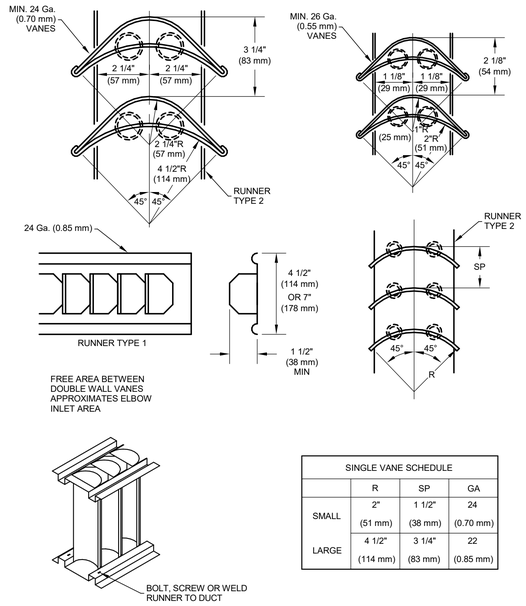

SINGLE VANE SCHEDULE			
	R	SP	GA
SMALL	2" (51 mm)	1 1/2" (38 mm)	24 (0.70 mm)
LARGE	4 1/2" (114 mm)	3 1/4" (83 mm)	22 (0.85 mm)

DUCT VANES AND VANE RUNNERS DETAIL

SCALE: N.T.S.

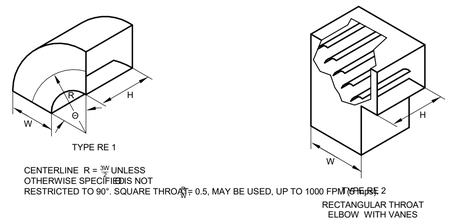

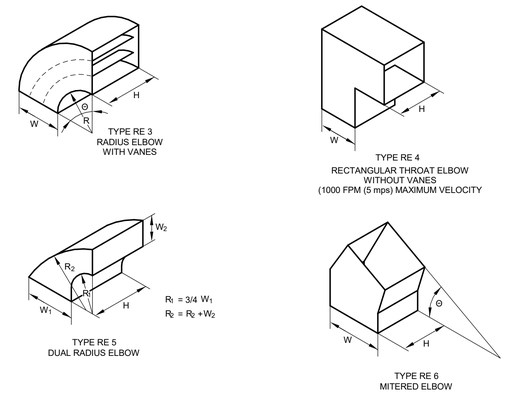

DUCT RECTANGULAR ELBOW DETAILS

SCALE: N.T.S.

ENGINEERS GEOSCIENTISTS MANITOBA

Certificate of Authorization

Epp Siepman Engineering Inc.

No. 4035

This is a print of a document that has been electronically authenticated with technology authorized by the Engineers Geoscientists Manitoba. The original is in electronic form.

epp siepman engineering

400 - 136 Market Avenue
Winnipeg, MB R3B 0P4
T 204 453 1080

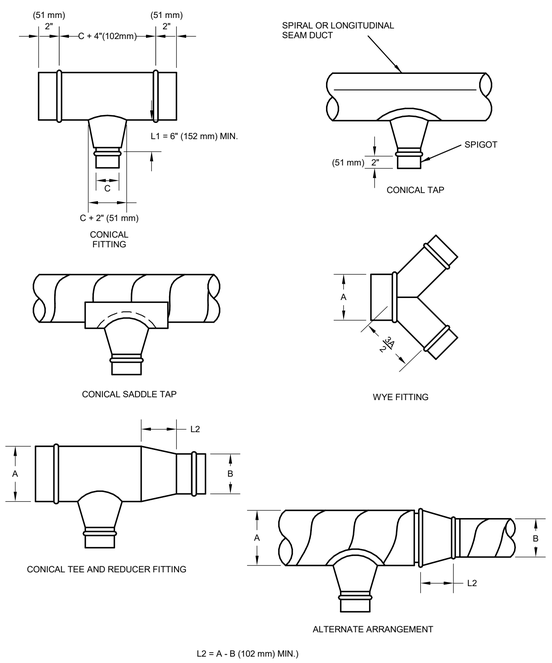

CONICAL TEES

SCALE: N.T.S.

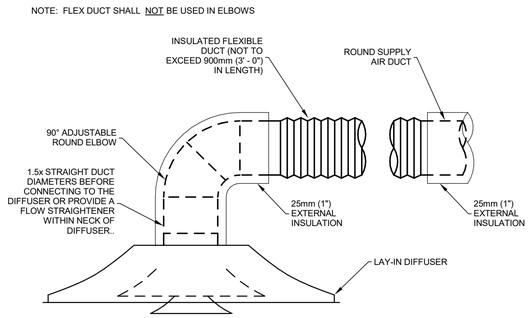

FLEX DUCT DETAIL

SCALE: N.T.S.

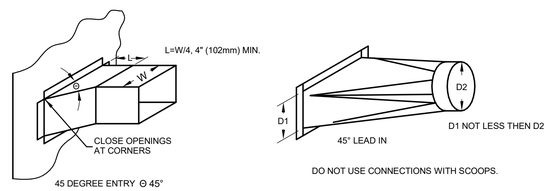

BRANCH CONNECTIONS DETAIL

SCALE: N.T.S.

LM esp

LM Architectural Group | Environmental Space Planning
500-136 Market Avenue Winnipeg, Manitoba Canada R3B 0P4
t: 204.942.0681 lm-esp.ca

No.	REVISION/DESCRIPTION	BY	DATE
0	ISSUED FOR CONSTRUCTION	JS/MP	24-04-01

SEAL

PROVINCE OF MANITOBA
J.D. SCHELLENBERG
Member
31336
2024-04-04
REGISTERED PROFESSIONAL ENGINEER

EB	JS	JS	JS
DRAWN	CHECKED	DESIGNED	APPROVED
DATE 2024-04-01	USER APPROVAL		

Winnipeg

THE CITY OF WINNIPEG
ASSETS & PROJECT MANAGEMENT DEPARTMENT
MUNICIPAL ACCOMMODATIONS DIVISION
3-65 GARRY STREET, R3C 4K4

PROJECT

PEMBINA TRAILS COLLEGIATE
VOCATIONAL WING
TENDER NO. 954-2023B

50 FRONTIER TRAIL, WINNIPEG, MANITOBA, R3Y 2H1

SHEET TITLE

Details - HVAC 1

SCALE	PROJECT No:	SHEET No:
1 : 1	2020-127	MH4.1

DRAWING SHEET SIZE: A1 (594x841) PLOT 1:1

ESE 24049