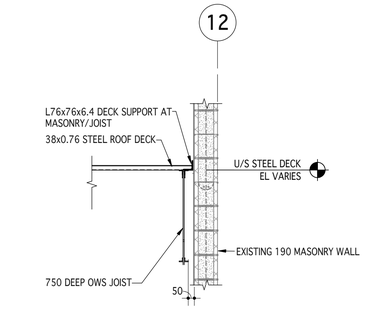

1 SECTION
S2.3 S4.4 1 : 25

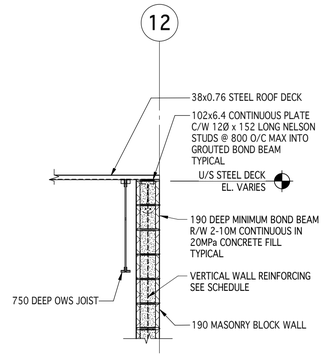

2 SECTION
S2.3 S4.4 1 : 25

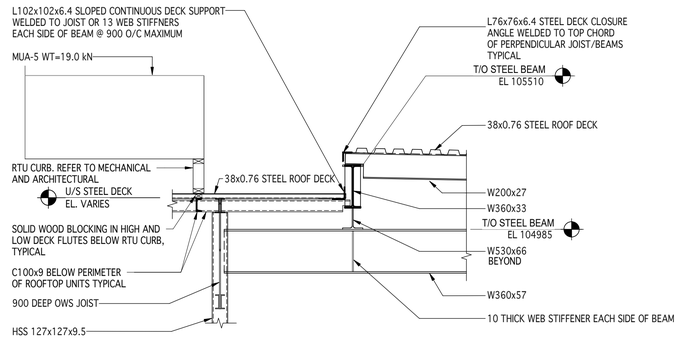

3 SECTION
S2.3 S4.4 1 : 25

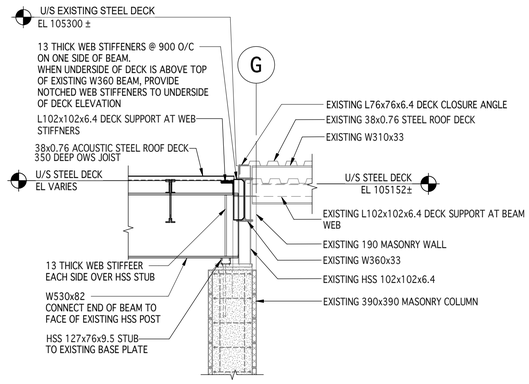

4 SECTION
S2.3 S4.4 1 : 25

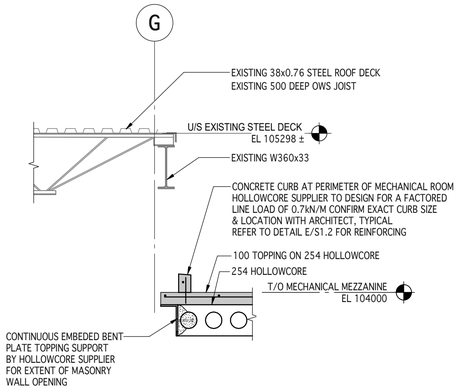

5 SECTION
S2.3 S4.4 1 : 25

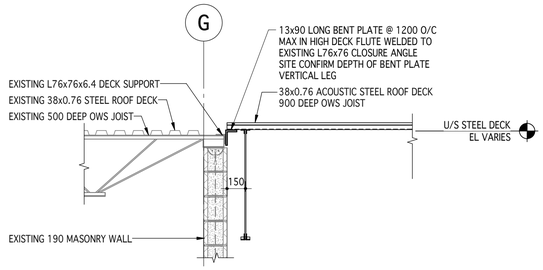

6 SECTION
S2.3 S4.4 1 : 25

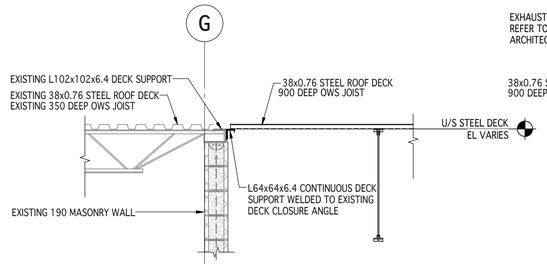

7 SECTION
S2.3 S4.4 1 : 25

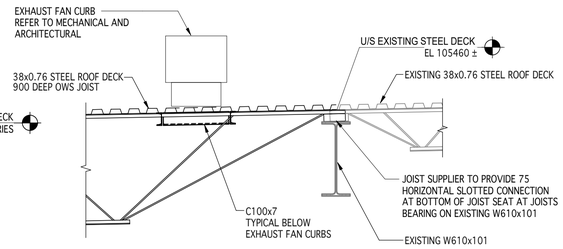

8 SECTION
S2.3 S4.4 1 : 25

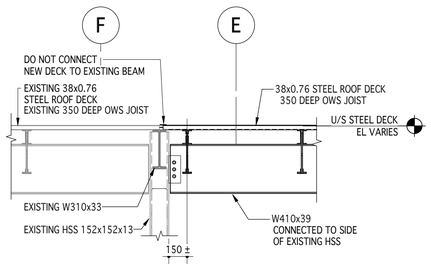

9 SECTION
S2.3 S4.4 1 : 25

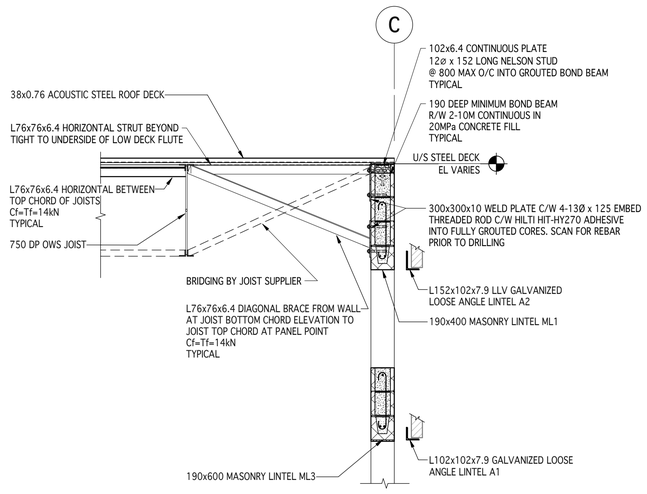

10 SECTION
S2.3 S4.4 1 : 25

2024-0002

CrosierKilgour
Structural Engineering & Building Performance

LM esp
LM Architectural Group | Environmental Space Planning
500-136 Market Avenue Winnipeg, Manitoba Canada R3B 0P4
t: 204.942.0681 lm-esp.ca

No.	REVISION/DESCRIPTION	BY	DATE
0	ISSUED FOR CONSTRUCTION	NRM	04.01.24

SEAL

PROVINCE OF MANITOBA
N.R. MOSCOVITCH
Member
33947
REGISTERED PROFESSIONAL ENGINEER

ENGINEER GEOSCIENTISTS MANITOBA
Certificate of Authorization
Crosier Kilgour & Partners Ltd.
No. 235

MS/CJM	NRM	NRM	NRM
DRAWN	CHECKED	DESIGNED	APPROVED
DATE 2024.04.01	USER APPROVAL		

Winnipeg
THE CITY OF WINNIPEG
ASSETS & PROJECT MANAGEMENT DEPARTMENT
MUNICIPAL ACCOMMODATIONS DIVISION
3–65 GARRY STREET, R3C 4K4

PROJECT
PEMBINA TRAILS COLLEGIATE
VOCATIONAL WING
TENDER NO. 954-2023B
50 FRONTIER TRAIL, WINNIPEG, MANITOBA, R3Y 2H1

SHEET TITLE
SECTIONS

SCALE	PROJECT No:	SHEET No:
1 : 25	2020-127	S4.4

LMesp COMM. NO. 1929V

DRAWING SHEET SIZE: A1 (594x841) PLOT 1:1