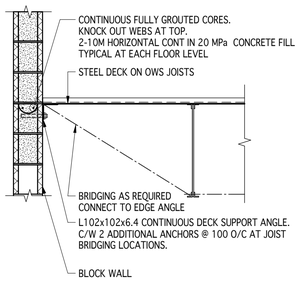

A / S1.4 STEEL JOIST PARALLEL TO BLOCK WALL

1 : 20

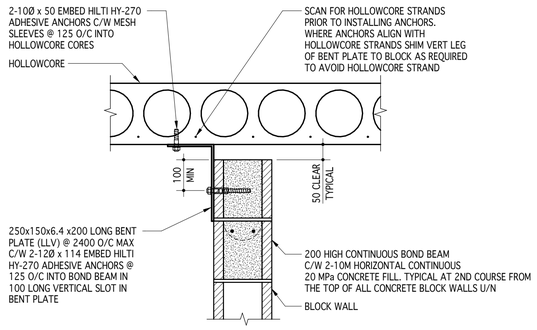

B / S1.4 LATERAL SUPPORT AT TOP OF MASONRY PARTITIONS

1 : 10

- SIMILAR WHERE BLOCK WALL IS PERPENDICULAR TO HOLLOWCORE SPAN DIRECTION
- TYPICAL AT ALL FREE ENDS OF MASONRY WALLS, AND ON ALL MASONRY WALLS GREATER THAN 4500 LONG BETWEEN PERPENDICULAR CONNECTING MASONRY WALLS
  SEE DETAIL J/S1.4

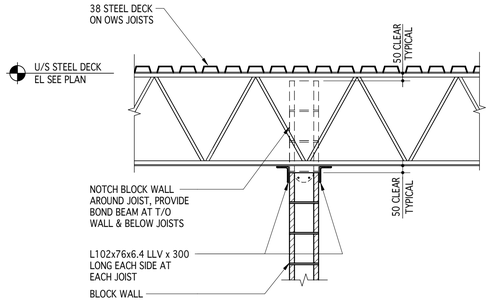

C / S1.4 MASONRY PARTITION WALL CONNECTION PERPENDICULAR TO JOISTS

1 : 20

- TYPICAL AT ALL FREE ENDS OF MASONRY WALLS, AND ON ALL MASONRY WALLS GREATER THAN 4500 LONG BETWEEN PERPENDICULAR CONNECTING MASONRY PARTITION WALLS
  SEE DETAIL J/S1.4

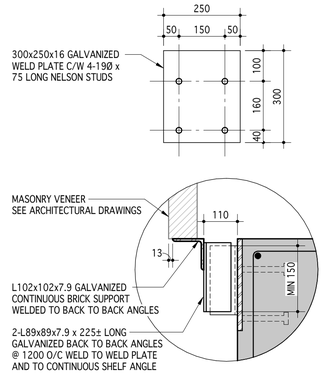

D / S1.4 TYPICAL MASONRY SUPPORT DETAIL

1 : 10

- ALL SHELF ANGLES, PLATES ETC SHALL BE GALVANIZED
- TOUCH UP ALL WELDING WITH ZINC RICH PAINT
- MASONRY SUPPORT @ MAX 200 FROM CORNERS & ENDS. MASONRY SUPPORT @ MAX 200 EACH SIDE OF CONTROL JOINTS. (SEE ARCH DRAWINGS FOR LOCATIONS)
- REFER TO STRUCTURAL PLANS FOR EXTENT OF SUPPORT ANGLE
- ENSURE SUPPORTS ARE LOCATED TO MISS POCKETS IN BEAMS AND UPSTANDS FOR NECESSARY BASEPLATES

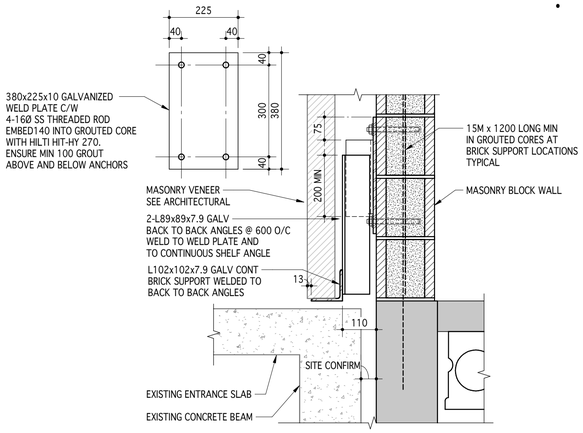

E / S1.4 TYPICAL MASONRY SUPPORT DETAIL ADJACENT TO EXISTING ENTRANCE SLAB

1 : 10

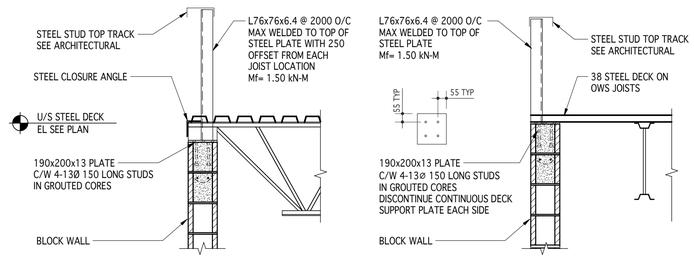

F / S1.4 TYPICAL PARAPET STIFFENER DETAIL WHERE PARAPET IS GREATER THAN 650 ABOVE U/S STEEL DECK AT BLOCK WALL

1 : 20

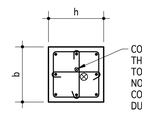

CONFORM TO THE REQUIREMENTS OF CSA A23.1 AND THE FOLLOWING:
TOTAL AREA OF EMBEDED CONDUITS OR FITTINGS SHALL NOT EXCEED 1% OF GROSS AREA (b x h). SECURE CONDUITS TO COLUMN TIES TO PREVENT DISPLACEMENT DURING CONCRETING

COLUMN (PLAN)

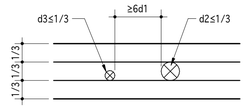

NOTE:
1. OUTSIDE DIAMETER OF CONDUIT (d1) OR BUNDLE OF CONDUITS SHALL NOT EXCEED 1/3 SLAB THICKNESS
2. CONDUITS SHALL BE PLACED IN MIDDLE THIRD OF SLAB DEPTH
3. d1 IS LARGER THAN d2 AND d3

SLAB OR WALL (SECTION)

EMBEDDED CONDUITS AND PIPING

NOTE:
1. PIPING & CONDUIT TO BE PLACED IN MIDDLE 1/3 OF SLAB.
2. DO NOT DISPLACE SLAB REINFORCING STEEL FROM SPECIFIED LOCATION.
3. DO NOT PLACE PIPING / CONDUITS OR MANIFOLDS WITHIN 200mm OF ANY SIDE OF COLUMNS OR WALLS.
4. WHERE PIPING / CONDUITS ARE GROUPED CLOSER THAN 150mm O/C & AT MANIFOLDS, PROVIDE ADDITIONAL REINF STEEL TO REINF THE AREA AS AS OPENING THRU THE SLAB. ADD THE SAME BAR SIZE & HALF THE NUMBER OF BARS INTERUPTED BY THE OPENING EACH SIDE TOP & BOTTOM.
5. PROVIDE SUPPORT & HI-CHAIRS FOR PIPING / CONDUITS INDEPENDENT OF SLAB TOP & BOTTOM REINF STEEL SUPPORT. UTILIZE INDEPENDENT REINF STEEL BARS OR WELDED WIRE MESH OR OTHER APPROPRIATE MEANS ACCEPTABLE TO THE OWNER & PIPING SUPPLIER.

H / S1.4 CONDUIT PIPES

1 : 25

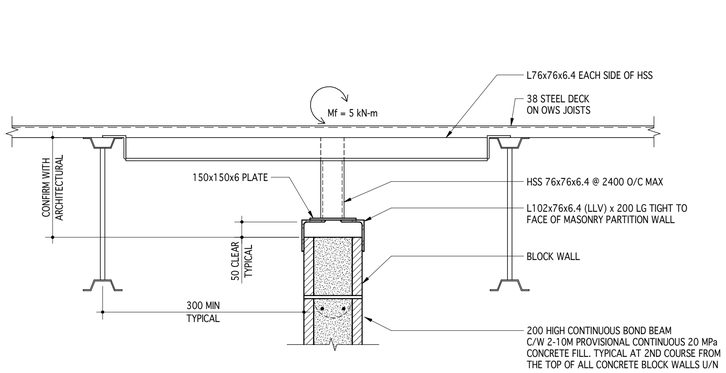

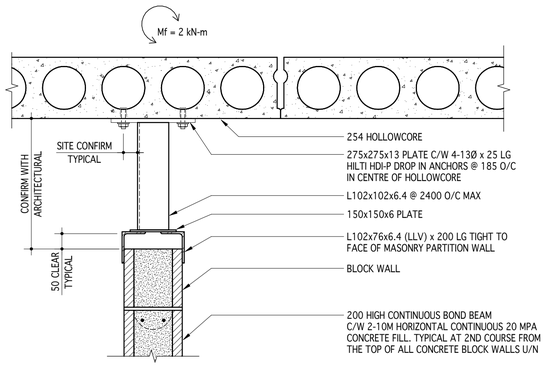

G / S1.4 TYPICAL TOP OF INTERIOR BLOCK PARTITION REINFORCING DETAIL WHERE WALL DOES NOT EXTEND TO UNDERSIDE OF STRUCTURE

1 : 10

- TYPICAL AT ALL FREE ENDS OF MASONRY WALLS, AND ON ALL MASONRY WALLS GREATER THAN 4500 LONG BETWEEN PERPENDICULAR CONNECTING MASONRY PARTITION WALLS
  SEE DETAIL J/S1.4

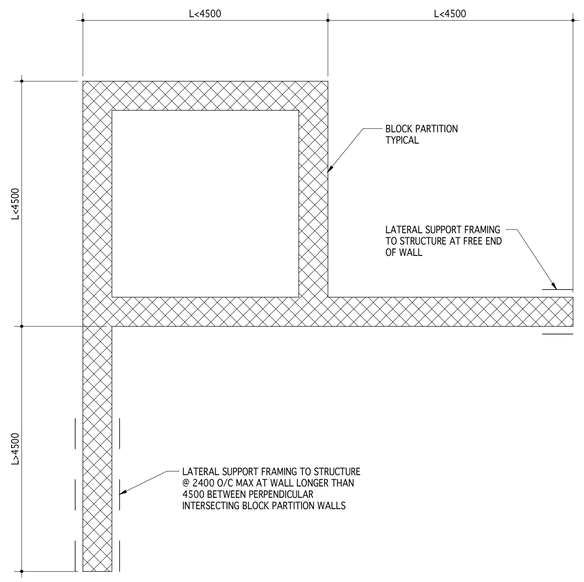

J / S1.4 BLOCK PARTITION SUPPORT LOCATION PLAN

1 : 20

- REFER TO OVERALL FRAMING PLANS FOR PARTITION SUPPORT LOCATIONS

2024-0002

CrosierKilgour
Structural Engineering & Building Performance

LM esp
LM Architectural Group | Environmental Space Planning
500-136 Market Avenue Winnipeg, Manitoba Canada R3B 0P4
t: 204.942.0681 lm-esp.ca

No.	REVISION/DESCRIPTION	BY	DATE
0	ISSUED FOR CONSTRUCTION	NRM	04.01.24

SEAL

PROVINCE OF MANITOBA N.R. MOSCOVITCH Member 33947 Feb 1/24 REGISTERED PROFESSIONAL ENGINEER

ENGINEER GEOSCIENTISTS MANITOBA
Certificate of Authorization
Crosier Kilgour & Partners Ltd.
No. 235

ZBG DRAWN	NRM CHECKED	NRM DESIGNED	NRM APPROVED
DATE 2024.04.01	USER APPROVAL		

Winnipeg
THE CITY OF WINNIPEG
ASSETS & PROJECT MANAGEMENT DEPARTMENT
MUNICIPAL ACCOMMODATIONS DIVISION
3-65 GARRY STREET, R3C 4K4

PROJECT
PEMBINA TRAILS COLLEGIATE
VOCATIONAL WING
TENDER NO. 954-2023B
50 FRONTIER TRAIL, WINNIPEG, MANITOBA, R3Y 2H1

SHEET TITLE
TYPICAL DETAILS

SCALE	PROJECT No:	SHEET No:
As indicated	2020-127	S1.4