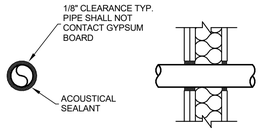

PENETRATIONS OF ACOUSTICAL PARTITIONS BY PIPES SHALL BE ACOUSTICALLY SEALED AS SHOWN. ALL GAPS LARGER THEN 1/2" SHALL BE COVERED WITH GYPSUM BOARD, LAPPED A MINIMUM OF 2" AND SCREWED BEFORE USING ACOUSTICAL SEALANT, BY OTHERS. DETAIL SIMILAR FOR DOUBLE STUD PENETRATION.

PIPE PENETRATION

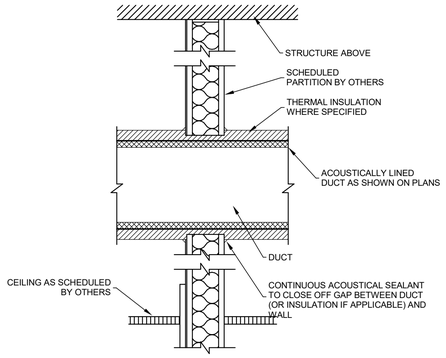

PENETRATIONS OF ACOUSTICAL PARTITIONS BY DUCTWORK SHALL BE ACOUSTICALLY SEALED AS SHOWN. ALL GAPS LARGER THEN 1/2" SHALL BE COVERED WITH GYPSUM BOARD, LAPPED A MINIMUM OF 2" AND SCREWED BEFORE USING ACOUSTICAL SEALANT, BY OTHERS.

DUCT PENETRATION

PENETRATION THROUGH WALL WITH STC RATING BELOW 45 DETAIL

SCALE: N.T.S.

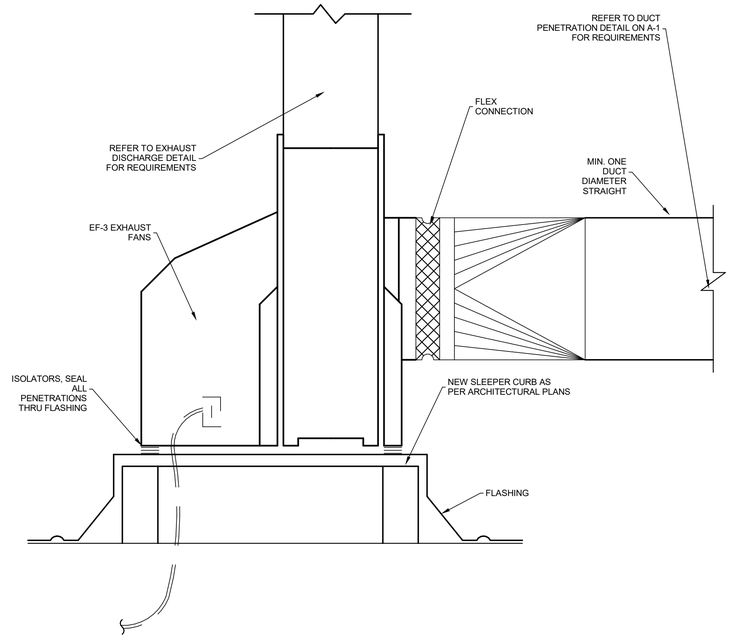

ROOF MOUNT UTILITY CENTRIFUGAL EXHAUST FAN DETAIL

SCALE: N.T.S.

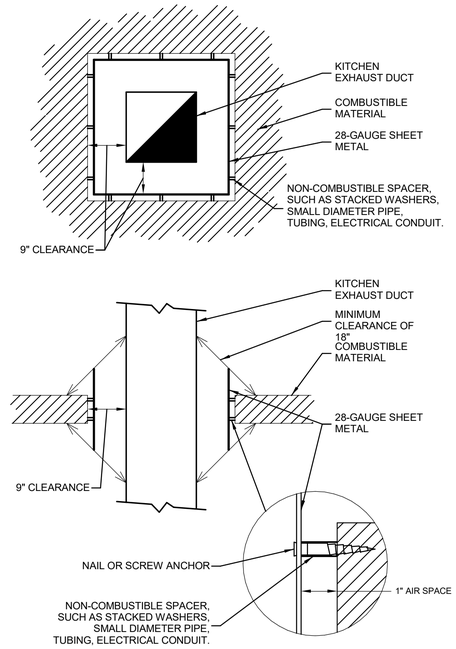

KITCHEN EXHAUST HOOD CLEARANCES DETAIL

SCALE: N.T.S.

ENGINEERS GEOSCIENTISTS MANITOBA

Certificate of Authorization

Epp Siepman Engineering Inc.

No. 4035

This is a print of a document that has been electronically authenticated with technology authorized by the Engineers Geoscientists Manitoba. The original is in electronic form.

epp siepman engineering

400 - 136 Market Avenue
Winnipeg, MB R3B 0P4
T 204 453 1080

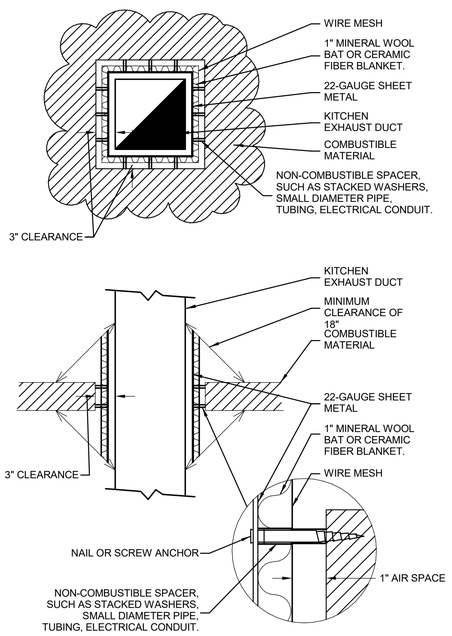

COMMERCIAL KITCHEN EXHAUST DUCT DETAIL

SCALE: N.T.S.

METRIC AND IMPERIAL

RETAINING ANGLES SIZE	SIZE OF FIRE DAMPER
38mm (1 1/2") X 38 (1 1/2") X 16 GAUGE	UNDER 2250mm (90") IN HEIGHT OR WIDTH
50mm (2") X 50mm (2") X 10 GAUGE	OVER 2250mm (90") IN HEIGHT OR WIDTH

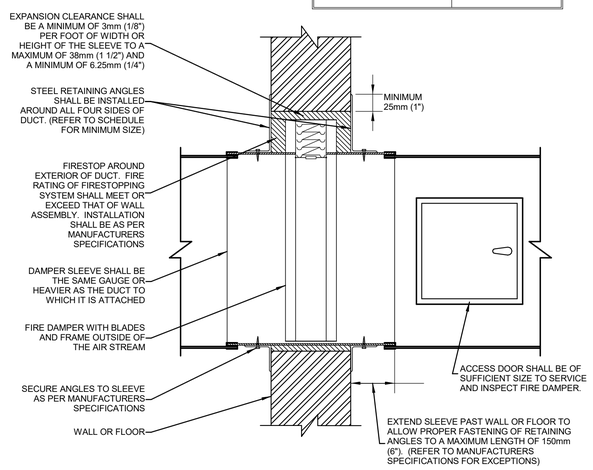

FIRE DAMPER DETAIL

SCALE: N.T.S.

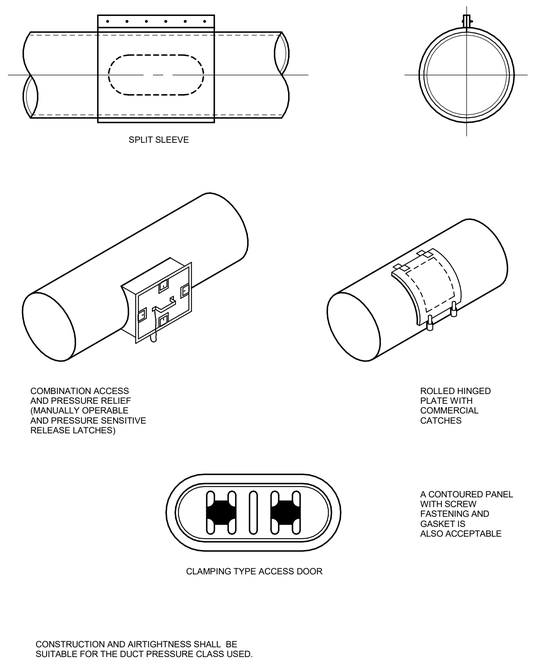

CONSTRUCTION AND AIRTIGHTNESS SHALL BE SUITABLE FOR THE DUCT PRESSURE CLASS USED.

ACCESS DOOR DETAIL - ROUND

SCALE: N.T.S

LM esp

LM Architectural Group | Environmental Space Planning
500-136 Market Avenue Winnipeg, Manitoba Canada R3B 0P4
t: 204.942.0681 lm-esp.ca

No.	REVISION/DESCRIPTION	BY	DATE
0	ISSUED FOR CONSTRUCTION	JS/MP	24-04-01

SEAL

PROVINCE OF MANITOBA
SCHELLENBERG
Member
31336
2024-04-01
REGISTERED PROFESSIONAL ENGINEER

EB	JS	JS	JS
DRAWN	CHECKED	DESIGNED	APPROVED
DATE 2024-04-01	USER APPROVAL		

Winnipeg

THE CITY OF WINNIPEG
ASSETS & PROJECT MANAGEMENT DEPARTMENT
MUNICIPAL ACCOMMODATIONS DIVISION
3-65 GARRY STREET, R3C 4K4

PROJECT

PEMBINA TRAILS COLLEGIATE
VOCATIONAL WING
TENDER NO. 954-2023B

50 FRONTIER TRAIL, WINNIPEG, MANITOBA, R3Y 2H1

SHEET TITLE

Details - HVAC 4

SCALE	PROJECT No:	SHEET No:
1 : 1	2020-127	MH4.4

DRAWING SHEET SIZE: A1 (594x841) PLOT 1:1
ESE 24049