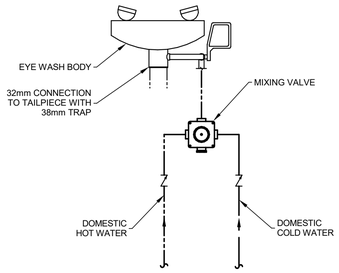

EYE WASH AND MIXING VALVE DETAIL

SCALE: N.T.S

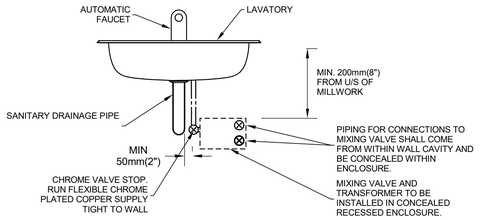

LAVATORY DETAIL

SCALE: N.T.S

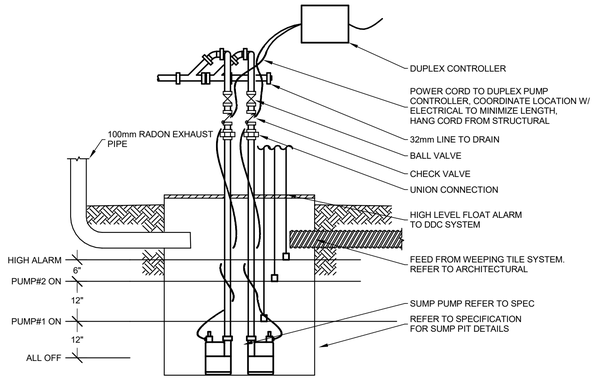

SUMP PUMP DETAIL - DUPLEX

SCALE: N.T.S

ENGINEERS GEOSCIENTISTS MANITOBA

Certificate of Authorization

Epp Siepman Engineering Inc.

No. 4035

This is a print of a document that has been electronically authenticated with technology authorized by the Engineers Geoscientists Manitoba. The original is in electronic form.

epp siepman engineering

400 - 136 Market Avenue
Winnipeg, MB R3B 0P4
T 204 453 1080

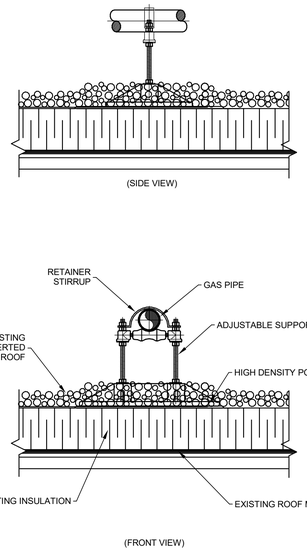

GAS PIPE SUPPORT ON FLAT ROOF

SCALE: N.T.S

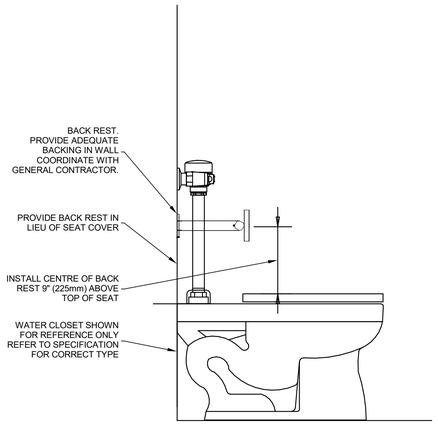

WATER CLOSET BACK REST DETAIL

SCALE: N.T.S.

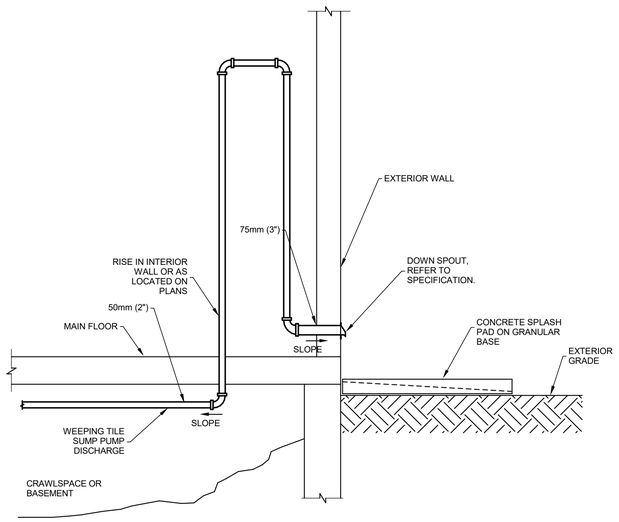

SUMP PUMP DISCHARGE DETAIL

SCALE: N.T.S.

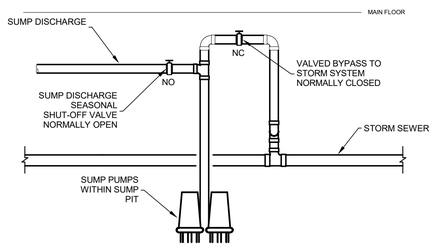

SUMP PUMP DISCHARGE DETAIL

SCALE: N.T.S

LM esp
LM Architectural Group | Environmental Space Planning
500-136 Market Avenue Winnipeg, Manitoba Canada R3B 0P4
t: 204.942.0681 lm-esp.ca

No.	REVISION/DESCRIPTION	BY	DATE
0	ISSUED FOR CONSTRUCTION	JS/MP	24-04-01

SEAL

PROVINCE OF MANITOBA
J. SCHELLENBERG
Member
31336
2024-04-01
REGISTERED PROFESSIONAL ENGINEER

EB DRAWN	JS CHECKED	JS DESIGNED	JS APPROVED
DATE 2024-04-01	USER APPROVAL		

Winnipeg

THE CITY OF WINNIPEG
ASSETS & PROJECT MANAGEMENT DEPARTMENT
MUNICIPAL ACCOMMODATIONS DIVISION
3-65 GARRY STREET, R3C 4K4

PROJECT

PEMBINA TRAILS COLLEGIATE
VOCATIONAL WING
TENDER NO. 954-2023B

50 FRONTIER TRAIL, WINNIPEG, MANITOBA, R3Y 2H1

SHEET TITLE

Details - Plumbing

SCALE	PROJECT No:	SHEET No:
1 : 1	2020-127	MP4.1

DRAWING SHEET SIZE: A1 (594x841) PLOT 1:1

ESE 24049