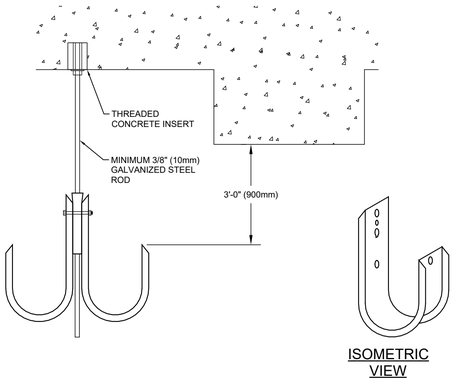

NOTES

1. CADDY CLIP AVAILABLE IN 1 1/2" (38mm) AND 2" (50mm) SIZES.

CADDY CLIP DETAIL

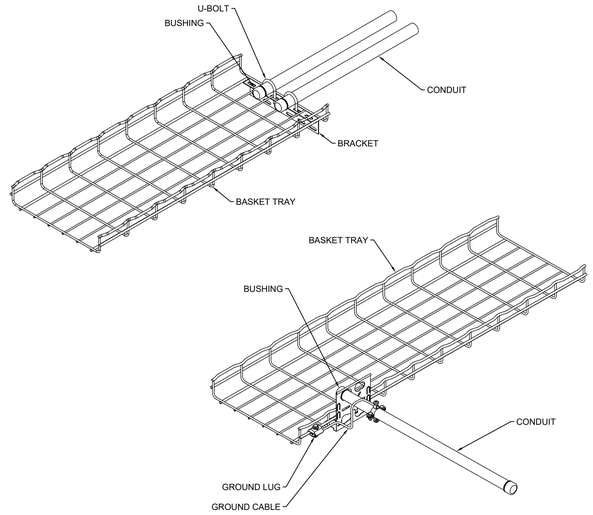

TYPICAL CONDUIT TO BASKET TRAY FASTENING DETAIL

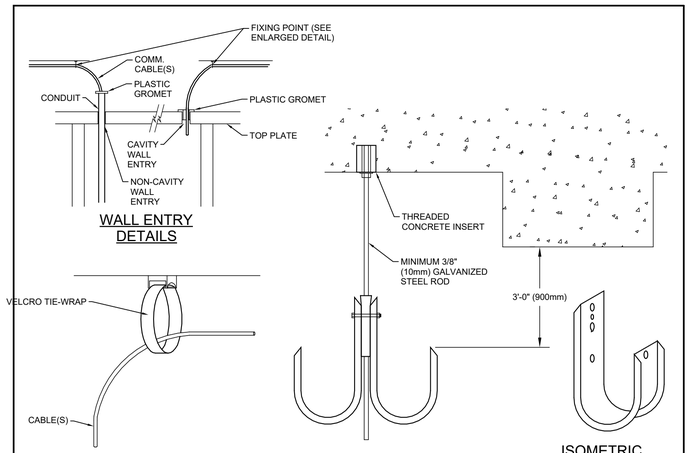

NOTES

1. CADDY CLIP AVAILABLE IN 1 1/2" (38mm) AND 2" (50mm) SIZES.

J-HOOK WALL ENTRY DETAIL

NOTES

1. SAFETY CHAIN SHALL BE MOUNTED TO BOTTOM SIDE OF CEILING FLUTE OR CHANNEL.
2. UNISTRUT SHALL BE SUPPORTED FROM TOP SIDE OF BOTTOM CHORD OF TRUSS. PROVIDE BEAM CLAMP SUITABLE FOR THE PURPOSE.

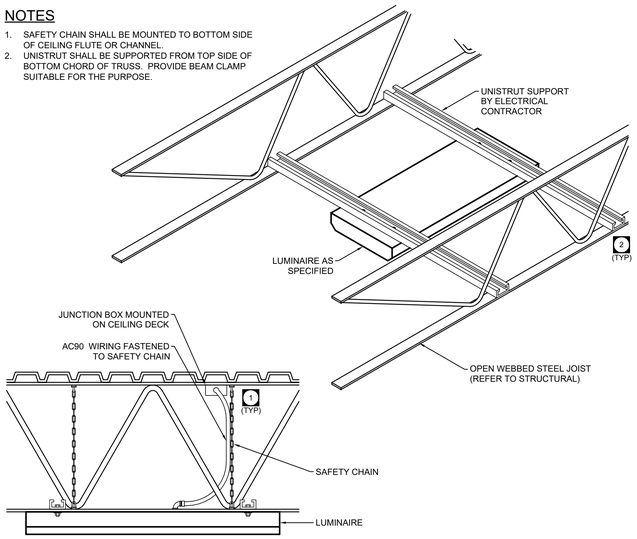

OPEN WEB STEEL JOIST (OWSJ) LUMINAIRE MOUNTING DETAIL

ENGINEERS GEOSCIENTISTS MANITOBA
Certificate of Authorization
Epp Siepman Engineering Inc.
No. 4035

This is a print of a document that has been electronically authenticated with technology authorized by the Engineers Geoscientists Manitoba. The original is in electronic form.

epp siepman engineering
400 - 136 Market Avenue
Winnipeg, MB R3B 0P4
T 204 453 1080

LM esp
LM Architectural Group | Environmental Space Planning
500-136 Market Avenue Winnipeg, Manitoba Canada R3B 0P4
t: 204.942.0681 lm-esp.ca

No.	REVISION/DESCRIPTION	BY	DATE
0	ISSUED FOR TENDER	JS/MP	24-04-01

SEAL

PROVINCE OF MANITOBA
M.G. PENNER
Member
23792
2024-04-01
REGISTERED PROFESSIONAL ENGINEER

EW DRAWN	MP/KG CHECKED	KG DESIGNED	MP/KG APPROVED
DATE 2024-04-01	USER APPROVAL		

Winnipeg

THE CITY OF WINNIPEG
ASSETS & PROJECT MANAGEMENT DEPARTMENT
MUNICIPAL ACCOMMODATIONS DIVISION
3-65 GARRY STREET, R3C 4K4

PROJECT

PEMBINA TRAILS COLLEGIATE
VOCATIONAL WING
TENDER NO. 954-2023B
50 FRONTIER TRAIL, WINNIPEG, MANITOBA, R3Y 2H1

SHEET TITLE

Electrical Details Sheet 2

SCALE	PROJECT No:	SHEET No:
	2020-127	E4.1

DRAWING SHEET SIZE: A1 (594x841) PLOT 1:1
ESE 24049