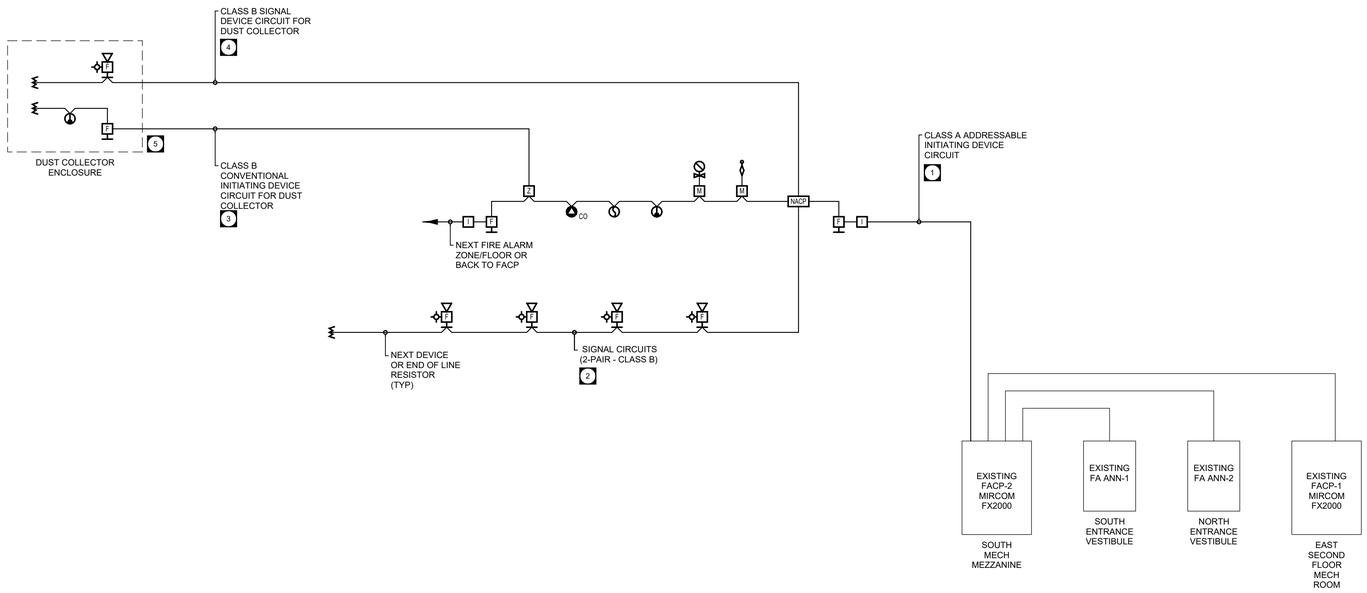

GENERAL NOTES

A. THIS FIRE ALARM RISER SHALL BE UTILIZED AS A GUIDE FOR THE CONTRACTOR TO PRICE. THE CONTRACTOR SHALL PROVIDE AN UPDATED RISER DIAGRAM AS CREATED BY THE FIRE ALARM SYSTEM MANUFACTURER TO ENSURE CODE CONFORMANCE BASED ON THEIR SYSTEM.

B. THE FIRE ALARM SYSTEM SHALL REMAIN FULLY FUNCTIONAL THROUGHOUT THE DURATION OF CONSTRUCTION.

C. MODIFY THE EXISTING FIRE ALARM SYSTEM AS REQUIRED TO ACCOMMODATE THE ADDITION AND RENOVATION REQUIREMENTS.

D. PROVIDE ISOLATION MODULES ENTERING AND LEAVING EACH ZONE AS DEFINED BY THE LATEST VERSION OF THE NATIONAL BUILDING CODE, AND ULC-S524.

E. PROVIDE CLASS A CIRCUITS FOR PUBLIC INITIATING/DETECTION DEVICE CIRCUITS.

F. PROVIDE CLASS B SIGNAL CIRCUITS FOR PUBLIC VISUAL DEVICE CIRCUITS.

G. PROVIDE CLASS B SIGNAL CIRCUITS FOR PUBLIC AUDIBLE DEVICE CIRCUITS.

H. COORDINATE FIRE PROTECTION ALARM AND SUPERVISORY CONNECTIONS WITH THE FIRE PROTECTION TRADE. PROVIDE ADDITIONAL MONITOR MODULES AS REQUIRED TO ACCOMMODATE THE FIRE PROTECTION SYSTEM.

KEY NOTES

1. PROVIDE NEW CLASS A INITIATING DEVICE CIRCUIT FOR VOCATIONAL WING INITIATING DEVICES.
2. PROVIDE NEW CLASS B SIGNAL CIRCUITS FOR VOCATIONAL WING SIGNAL DEVICES.
3. PROVIDE NEW CLASS B INITIATING DEVICE CIRCUIT TO SERVE THE DUST COLLECTOR ENCLOSURE.
4. PROVIDE DEDICATED CLASS B SIGNAL CIRCUIT FOR DUST COLLECTOR ENCLOSURE.
5. DEVICES WITHIN DUST COLLECTOR ENCLOSURE SHALL BE CONVENTIONAL TYPE, WEATHERPROOF.

ALARM ZONES
SPRINKLER ZONE FLOW SWITCH CRAWLSPACE
SPRINKLER ZONE FLOW SWITCH MAIN FLOOR
SPRINKLER ZONE FLOW SWITCH SECOND FLOOR
FIRE ALARM INITIATING DEVICE CRAWLSPACE
FIRE ALARM INITIATING DEVICE MAIN FLOOR
FIRE ALARM INITIATING DEVICE SECOND FLOOR
FIRE ALARM DUCT SMOKE DETECTOR AHU-7
FIRE ALARM DUCT SMOKE DETECTOR AHU-8
FIRE ALARM DUCT SMOKE DETECTOR AHU-9
FIRE ALARM DUCT SMOKE DETECTOR AHU-10
FIRE ALARM DUST COLLECTOR ENCLOSURE
FIRE SUPPRESSION SYSTEM CULINARY ARTS HOOD 1
FIRE SUPPRESSION SYSTEM CULINARY ARTS HOOD 2
FIRE SUPPRESSION SYSTEM CULINARY ARTS HOOD 3
FIRE SUPPRESSION SYSTEM CULINARY ARTS HOOD 4
FIRE SUPPRESSION SYSTEM CULINARY ARTS HOOD 5
FIRE SUPPRESSION SYSTEM CULINARY ARTS HOOD 6
DUST COLLECTOR FIRE ALARM

SUPERVISORY ZONE SCHEDULE
SPRINKLER ZONE VALVE CRAWLSPACE
SPRINKLER ZONE VALVE MAIN FLOOR
SPRINKLER ZONE VALVE SECOND FLOOR
CARBON MONOXIDE (CO) DETECTION CRAWLSPACE
CARBON MONOXIDE (CO) DETECTION MAIN FLOOR
CARBON MONOXIDE (CO) DETECTION SECOND FLOOR
DUST COLLECTOR COMMON TROUBLE

ENGINEERS GEOSCIENTISTS MANITOBA
Certificate of Authorization
Epp Siepman Engineering Inc.
No. 4035

This is a print of a document that has been electronically authenticated with technology authorized by the Engineers Geoscientists Manitoba. The original is in electronic form.

epp siepman engineering
400 - 136 Market Avenue
Winnipeg, MB R3B 0P4
T 204 453 1080

LM esp
LM Architectural Group | Environmental Space Planning
500-136 Market Avenue Winnipeg, Manitoba Canada R3B 0P4
t: 204.942.0681 lm-esp.ca

No.	REVISION/DESCRIPTION	BY	DATE
0	ISSUED FOR TENDER	JS/MP	24-04-01

SEAL

PROVINCE OF MANITOBA
M. G. PENNER
Member
23792
2024-04-01
PROFESSIONAL ENGINEER

EW DRAWN	MP/KG CHECKED	KG DESIGNED	MP/KG APPROVED
DATE 2024-04-01	USER APPROVAL		

Winnipeg
THE CITY OF WINNIPEG
ASSETS & PROJECT MANAGEMENT DEPARTMENT
MUNICIPAL ACCOMMODATIONS DIVISION
3-65 GARRY STREET, R3C 4K4

PROJECT
PEMBINA TRAILS COLLEGIATE
VOCATIONAL WING
TENDER NO. 954-2023B
50 FRONTIER TRAIL, WINNIPEG, MANITOBA, R3Y 2H1

SHEET TITLE
Fire Alarm Riser Diagram

SCALE	PROJECT No:	SHEET No:
1:1	2020-127	E5.1

DRAWING SHEET SIZE: A1 (594x841) PLOT 1:1
ESE 24049