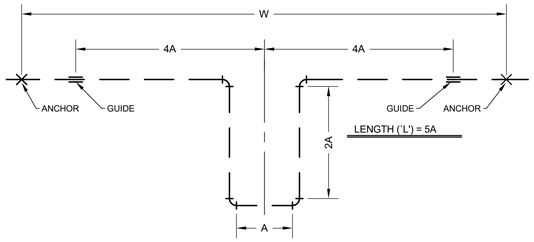

LENGTH OF 'L' IN FEET OF EXPANSION LOOPS

FOR DELTA T OF 160° F (40°-200°) OR LESS

W	3/4"	1"	1 1/4"	1 1/2"	2"	2 1/2"	3"	3 1/2"	4"	5"	6"	8"
0-25'	3.6	4.0	4.5	4.8	5.4	5.9	6.5	7.0	7.4	8.3	9.0	10.3
25-50'	5.0	5.6	6.3	6.7	7.5	8.3	9.2	9.8	10.4	11.5	12.6	14.4
50-75'	6.1	6.8	7.7	8.3	9.3	10.2	11.2	12.0	12.7	14.1	15.4	17.5
75-100'	7.0	7.9	8.8	9.5	10.7	11.7	13.0	13.8	14.6	16.3	17.8	20.2
100-125'	8.0	8.9	10.0	10.4	11.9	13.1	14.5	15.4	16.4	18.3	19.9	22.7
125-150'	8.7	9.7	10.9	11.7	13.1	14.4	15.9	16.9	18.0	19.9	21.8	24.8
150-175'	9.4	10.4	11.8	12.6	14.1	15.4	17.1	18.3	19.4	21.5	23.5	26.8
175-200'	10.0	11.2	12.6	13.5	15.0	16.5	18.4	19.5	20.6	22.9	25.2	28.7
200-250'	11.2	12.5	14.0	14.9	16.9	18.8	20.3	21.8	23.1	25.7	28.1	32.0

LENGTH OF 'L' IN METERS OF EXPANSION LOOPS

FOR DELTA T OF 71° C (4°-93°) OR LESS

W	19mm	25mm	32mm	38mm	51mm	64mm	76mm	89mm	102mm	127mm	152mm	203mm
0-7.6m	1100	1220	1370	1460	1650	1800	1980	2130	2260	2530	2740	3140
7.6-15.2m	1520	1710	1920	2040	2290	2530	2800	2990	3170	3510	3840	4390
15.2-22.9m	1860	2070	2350	2530	2840	3110	3410	3660	3871	4300	4690	5334
22.9-30.5m	2130	2410	2680	2900	3260	3570	3960	4210	4450	4970	5430	6160
30.5-38.1m	2440	2710	3050	3170	3630	4000	4420	4690	5000	5580	6070	6920
38.1-45.7m	2650	2960	3320	3570	4000	4390	4850	5150	5490	6070	6650	7560
45.7-53.4m	2870	3170	3600	3840	4300	4700	5210	5580	5910	6550	7160	8170
53.4-61m	3050	3410	3840	4120	4570	5030	5610	5940	6280	6980	7680	8750
61-76.2m	3410	3810	4270	4540	5150	5730	6190	6650	7040	7830	8570	9750

— A TO A REFERS TO LENGTH FROM ANCHOR TO ANCHOR
— TYPICAL FOR CARBON STEEL PIPE

EXPANSION LOOP DETAIL - STEEL PIPE

SCALE: N.T.S

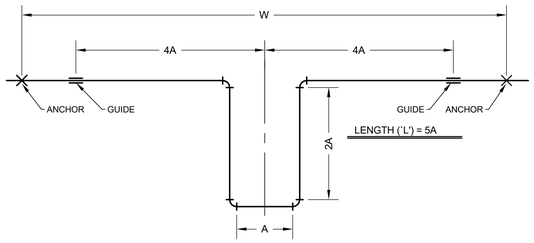

LENGTH OF 'L' IN FEET OF EXPANSION LOOPS

FOR DELTA T OF 160° F (40°-200°) OR LESS

W	3/4"	1"	1 1/4"	1 1/2"	2"	2 1/2"	3"	3 1/2"	4"	5"	6"	8"
0-25'	5.4	6.0	6.8	7.2	8.1	8.9	9.8	10.5	11.1	12.5	13.5	15.5
25-50'	7.5	8.4	9.5	10.1	11.3	12.5	13.8	14.7	15.6	17.3	18.9	21.6
50-75'	9.2	10.2	11.6	12.5	14.0	15.3	16.8	18.0	19.1	21.2	23.1	26.3
75-100'	10.5	11.9	13.2	14.3	16.1	17.6	19.5	20.7	21.9	24.5	26.7	30.3
100-125'	12.0	13.4	15.0	15.6	17.9	19.7	21.8	23.1	24.6	27.5	29.9	34.1
125-150'	13.1	14.6	16.4	17.6	19.7	21.6	23.9	25.4	27.0	29.9	32.7	37.2
150-175'	14.1	15.6	17.7	18.9	21.2	23.1	25.7	27.5	29.1	32.3	35.3	40.2
175-200'	15.1	16.8	18.9	20.3	22.5	24.8	27.6	29.3	30.9	34.4	37.8	43.1
200-250'	16.8	18.8	21.0	22.4	25.4	28.2	30.5	32.7	34.7	38.6	42.2	48.0

LENGTH OF 'L' IN METERS OF EXPANSION LOOPS

FOR DELTA T OF 71° C (4°-93°) OR LESS

W	19mm	25mm	32mm	38mm	51mm	64mm	76mm	89mm	102mm	127mm	152mm	203mm
0-7.6m	1650	1830	2070	2200	2470	2710	2990	3200	3380	3810	4120	4720
7.6-15.2m	2290	2560	2900	3080	3440	3810	4210	4480	4760	5270	5760	6580
15.2-22.9m	2800	3110	3540	3810	4270	4660	5120	5490	5820	6460	7040	8020
22.9-30.5m	3200	3630	4020	4360	4910	5360	5940	6310	6680	7470	8140	9240
30.5-38.1m	3660	4080	4570	4760	5460	6010	6650	7040	7500	8380	9110	10390
38.1-45.7m	4000	4450	5000	5360	6010	6580	7290	7740	8230	9110	9970	11340
45.7-53.4m	4300	4760	5400	5760	6460	7040	7830	8380	8870	9850	10760	12250
53.4-61m	4600	5120	5760	6190	6860	7560	8410	8930	9418	10490	11520	13140
61-76.2m	5120	5730	6400	6830	7740	8600	9300	9970	10577	11770	12860	14630

— A TO A REFERS TO LENGTH FROM ANCHOR TO ANCHOR
— TYPICAL FOR COPPER PIPE

EXPANSION LOOP SCHEDULE - COPPER PIPE

SCALE: N.T.S.

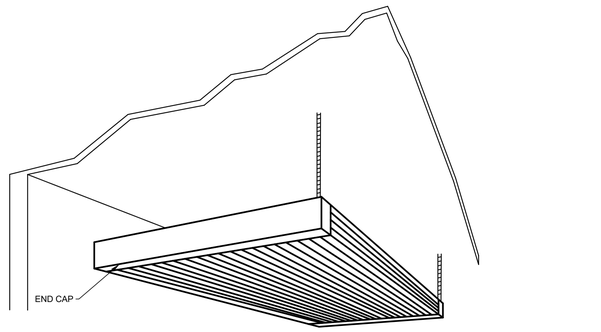

HANGING LINEAR PANEL IN EXPOSED AREA

SCALE: N.T.S.

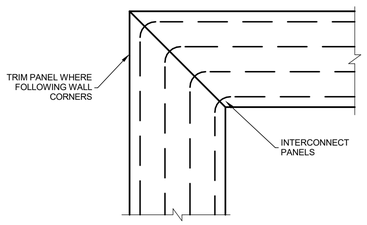

TRIMMED RADIANT PANEL DETAIL

SCALE: N.T.S.

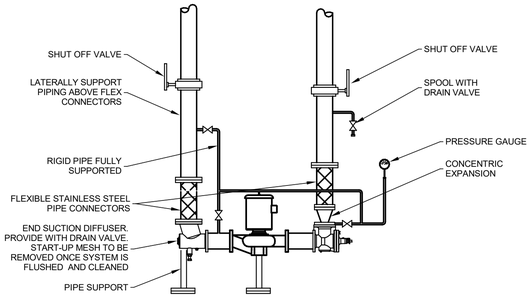

INLINE PUMP DETAIL

SCALE: N.T.S.

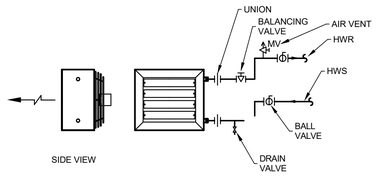

HYRONIC UNIT HEATER

SCALE: N.T.S.

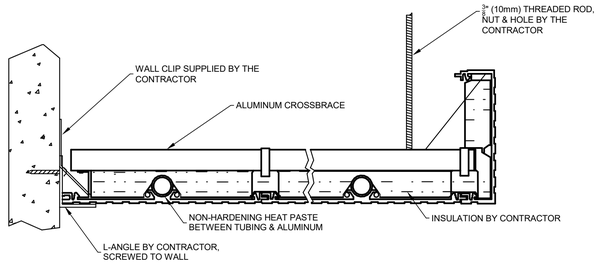

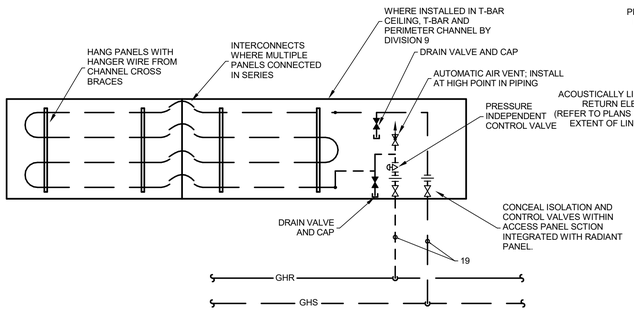

RADIANT PANEL HOOK-UP DETAIL

SCALE: N.T.S.

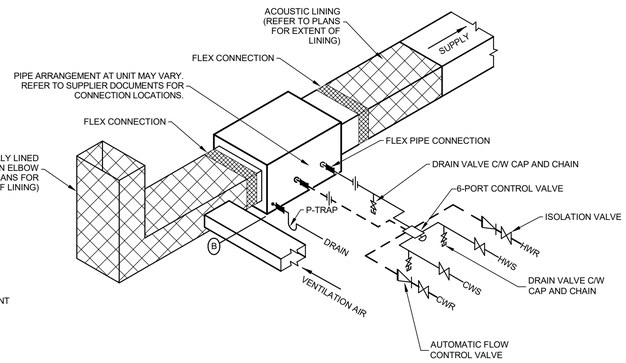

FAN COIL (2 PIPE) TYPICAL ISOMETRIC

SCALE: N.T.S.

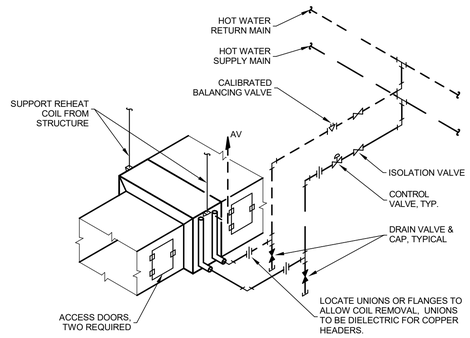

REHEAT COIL DETAIL - 2WAY

SCALE: N.T.S.

ENGINEERS GEOSCIENTISTS MANITOBA
Certificate of Authorization
Epp Siepman Engineering Inc.
No. 4035

This is a print of a document that has been electronically authenticated with technology authorized by the Engineers Geoscientists Manitoba. The original is in electronic form.

epp siepman engineering
400 - 136 Market Avenue
Winnipeg, MB R3B 0P4
T 204 453 1080

LM esp
LM Architectural Group | Environmental Space Planning
500-136 Market Avenue Winnipeg, Manitoba Canada R3B 0P4
t: 204.942.0681 lm-esp.ca

No.	REVISION/DESCRIPTION	BY	DATE
0	ISSUED FOR CONSTRUCTION	JS/MP	24-04-01

SEAL

PROVINCE OF MANITOBA
JOEL SCHELLENBERG
Member
31336
2024-04-01
REGISTERED PROFESSIONAL ENGINEER

EB	JS	JS	JS
DRAWN	CHECKED	DESIGNED	APPROVED
DATE 2024-04-01	USER APPROVAL		

Winnipeg
THE CITY OF WINNIPEG
ASSETS & PROJECT MANAGEMENT DEPARTMENT
MUNICIPAL ACCOMMODATIONS DIVISION
3-65 GARRY STREET, R3C 4K4

PROJECT
PEMBINA TRAILS COLLEGIATE
VOCATIONAL WING
TENDER NO. 954-2023B
50 FRONTIER TRAIL, WINNIPEG, MANITOBA, R3Y 2H1

SHEET TITLE
Details - Hydronic

SCALE	PROJECT No:	SHEET No:
1 : 1	2020-127	MY4.1

DRAWING SHEET SIZE: A1 (594x841) PLOT 1:1
ESE 24049