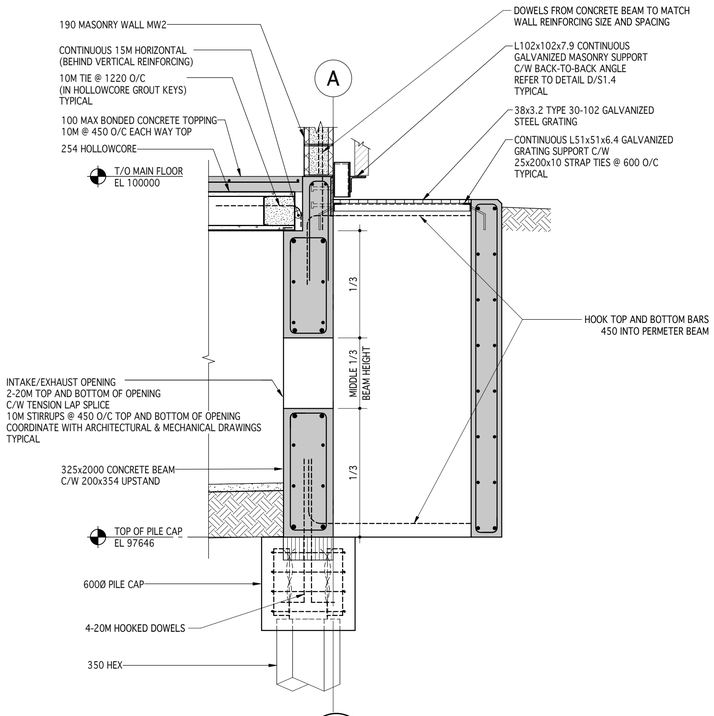


1 SECTION
S2.2 S4.5 1 : 20

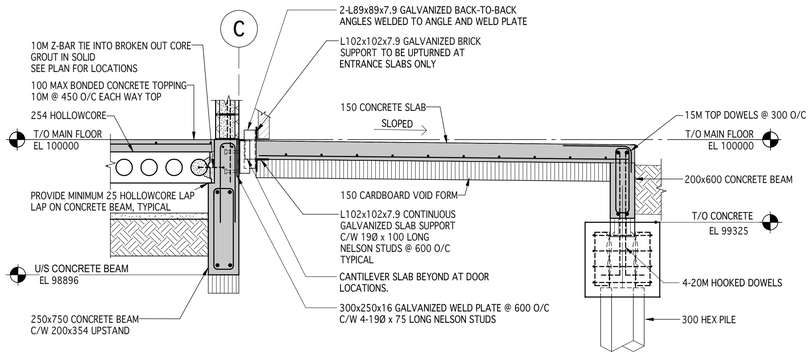


2 SECTION
S2.2 S4.5 1 : 25

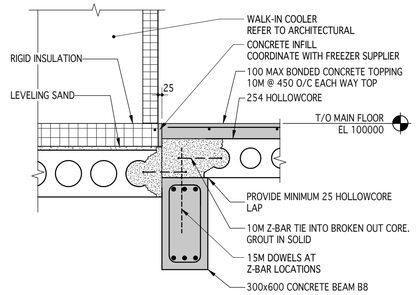


3 SECTION
S2.2 S4.5 1 : 20

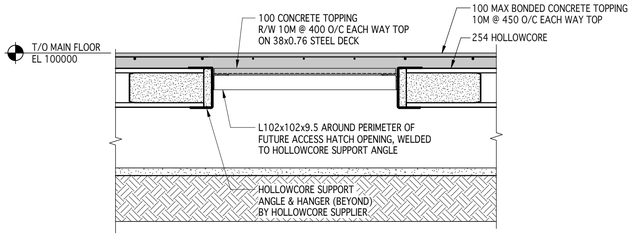


4 SECTION
S2.2 S4.5 1 : 20

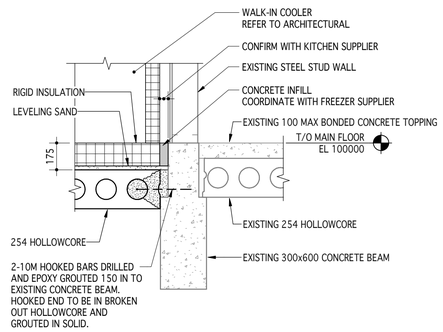


5 SECTION
S2.2 S4.5 1 : 20

2024-0002

CrosierKilgour
Structural Engineering & Building Performance

LM esp
LM Architectural Group | Environmental Space Planning
500-136 Market Avenue Winnipeg, Manitoba Canada R3B 0P4
t: 204.942.0681 lm-esp.ca

| No. | REVISION/DESCRIPTION | BY | DATE |
|---|---|---|---|
| | | | |
| | | | |
| 0 | ISSUED FOR CONSTRUCTION | NRM | 04.01.24 |

SEAL

PROVINCE OF MANITOBA N.R. MOSCOVITCH Member 33947 Apr. 1/24 REGISTERED PROFESSIONAL ENGINEER

ENGINEER GEOSCIENTISTS MANITOBA
Certificate of Authorization
Crosier Kilgour & Partners Ltd.
No. 235

| CJM DRAWN | NRM CHECKED | NRM DESIGNED | NRM APPROVED |
|---|---|---|---|
| DATE 2024.04.01 | USER APPROVAL | | |

Winnipeg
THE CITY OF WINNIPEG
ASSETS & PROJECT MANAGEMENT DEPARTMENT
MUNICIPAL ACCOMMODATIONS DIVISION
3–65 GARRY STREET, R3C 4K4

PROJECT
PEMBINA TRAILS COLLEGIATE
VOCATIONAL WING
TENDER NO. 954-2023B
50 FRONTIER TRAIL, WINNIPEG, MANITOBA, R3Y 2H1

SHEET TITLE
SECTIONS

| SCALE | PROJECT No: | SHEET No: |
|---|---|---|
| As indicated | 2020-127 | S4.5 |

LMesp COMM. NO. 1929V

DRAWING SHEET SIZE: A1 (594x841) PLOT 1:1