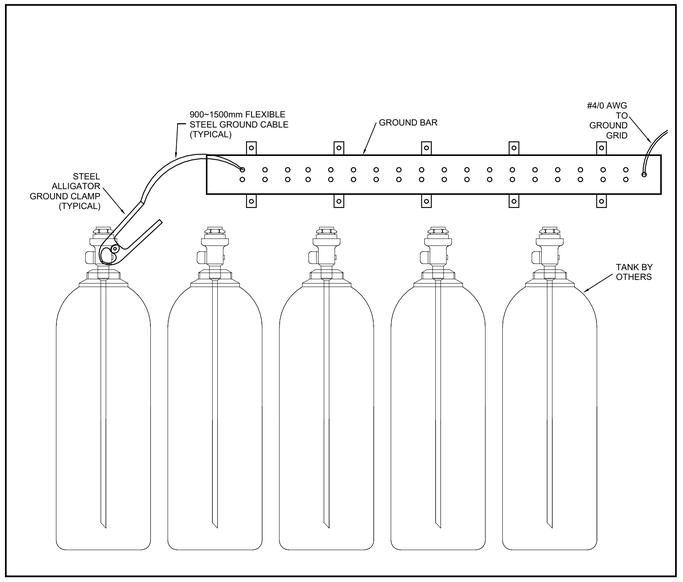

EXPLOSIVE GAS TANK STORAGE GROUNDING

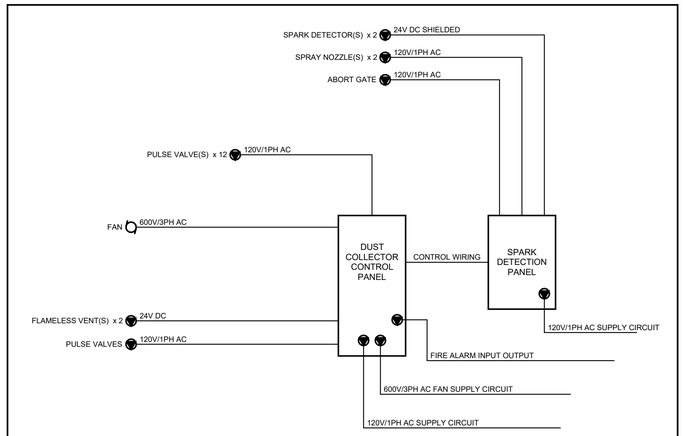

GENERAL NOTES

A. ALL WIRING SHALL BE INSTALLED IN CONDUIT.
B. REFER MECHANICAL EQUIPMENT SCHEDULE(S) FOR ADDITIONAL REQUIREMENTS.
C. REFER TO MECHANICAL CONTRACT DOCUMENTS FOR ADDITIONAL REQUIREMENTS.
D. COORDINATE COMPLETE INSTALLATION WITH MECHANICAL.
E. ALL WIRING BY DIV. 26 UNLESS NOTED OTHERWISE.

DUST COLLECTOR WIRING SCHEMATIC

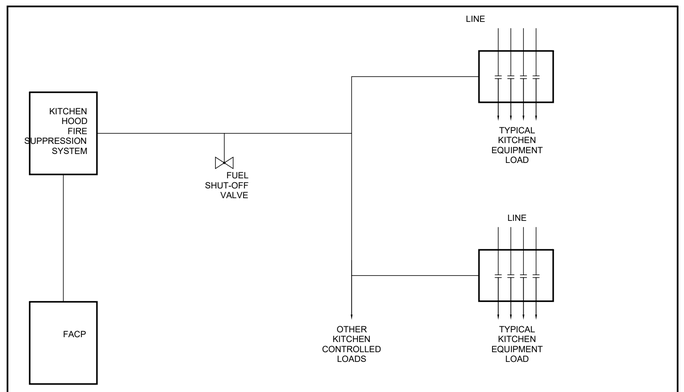

GENERAL NOTES

- WIRE AND CONNECT ALL DEVICES BELOW FOOTPRINT OF KITCHEN HOOD THROUGH NORMALLY CLOSED CONTACTORS.
- ON ACTIVATION, KITCHEN HOOD FIRE SUPPRESSION SYSTEM SHALL ENGAGE FUEL SHUT-OFF VALVE TO THE OFF POSITION.
- ON ACTIVATION, KITCHEN HOOD FIRE SUPPRESSION SYSTEM SHALL DISENGAGE POWER TO ALL ELECTRICAL OUTLETS WITHIN 2' (600mm) EITHER SIDE OF THE KITCHEN HOOD.
- PROVIDE BI-DIRECTIONAL ALARM SIGNAL TO FIRE ALARM PANEL SUCH THAT AN ACTIVATION OF THE FIRE ALARM SYSTEM WILL SHUT OFF THE FUEL VALVE AND, ACTIVATION OF FIRE SUPPRESSION SYSTEM WILL CAUSE FIRE ALARM PANEL TO GO INTO ALARM.

KITCHEN HOOD FIRE SUPPRESSION WIRING SCHEMATIC

ENGINEERS GEOSCIENTISTS MANITOBA
Certificate of Authorization
Epp Siepman Engineering Inc.
No. 4035

This is a print of a document that has been electronically authenticated with technology authorized by the Engineers Geoscientists Manitoba. The original is in electronic form.

epp siepman engineering
400 - 136 Market Avenue
Winnipeg, MB R3B 0P4
T 204 453 1080

LM esp
LM Architectural Group | Environmental Space Planning
500-136 Market Avenue Winnipeg, Manitoba Canada R3B 0P4
t: 204.942.0681 lm-esp.ca

No.	REVISION/DESCRIPTION	BY	DATE
0	ISSUED FOR TENDER	JS/MP	24-04-01

SEAL

PROVINCE OF MANITOBA
M.G. PENNER
Member
23792
2024-04-01
REGISTERED PROFESSIONAL ENGINEER

EW DRAWN	MP/KG CHECKED	KG DESIGNED	MP/KG APPROVED
DATE 2024-04-01	USER APPROVAL		

Winnipeg
THE CITY OF WINNIPEG
ASSETS & PROJECT MANAGEMENT DEPARTMENT
MUNICIPAL ACCOMMODATIONS DIVISION
3-65 GARRY STREET, R3C 4K4

PROJECT
PEMBINA TRAILS COLLEGIATE
VOCATIONAL WING
TENDER NO. 954-2023B
50 FRONTIER TRAIL, WINNIPEG, MANITOBA, R3Y 2H1

SHEET TITLE
Electrical Details Sheet 3

SCALE	PROJECT No:	SHEET No:
	2020-127	E4.2

DRAWING SHEET SIZE: A1 (594x841) PLOT 1:1
ESE 24049