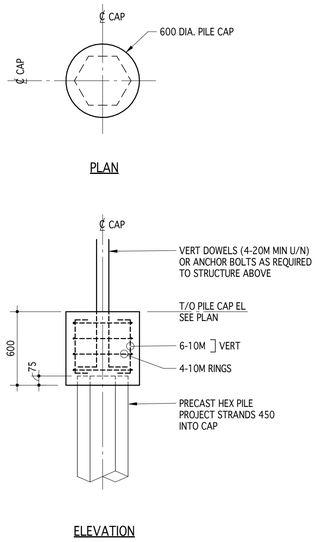

A S1.3 SINGLE HEX PILE CAP DETAIL

1 : 25

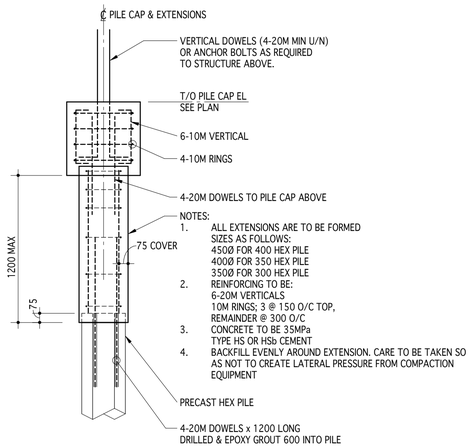

B S1.3 PRECAST PILE EXTENSION DETAIL

1 : 25

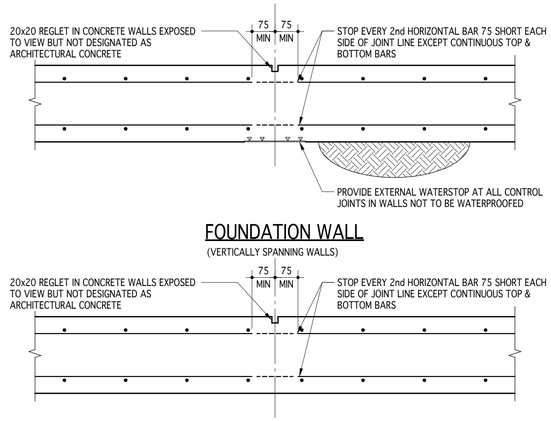

C S1.3 VERTICAL CONTROL JOINTS IN CONCRETE WALL

1 : 10

NOTE: MAXIMUM SPACING OF CONTROL JOINTS SHALL BE 6000 UNLESS NOTED OTHERWISE. FOR WALLS DESIGNATED AS ARCHITECTURAL CONCRETE, REGLET SHALL BE AS PER ARCHITECTURAL DRAWINGS

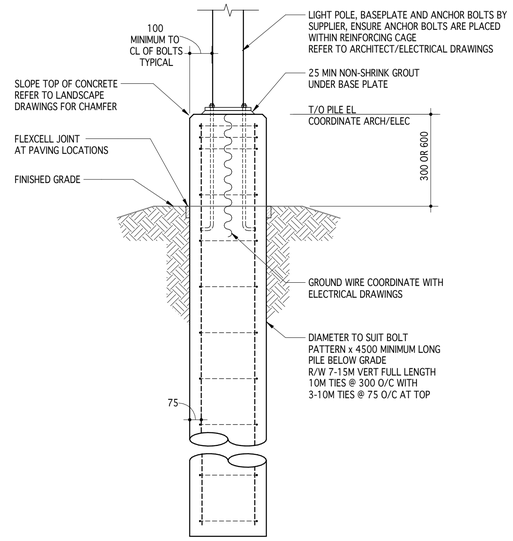

D S1.3 TYPICAL LIGHT STANDARD PILE

1 : 20

- COORDINATE QUANTITY AND LOCATIONS REQUIRED WITH ELECTRICAL, CIVIL & ARCHITECTURAL DRAWINGS
- FOR WOOD FENCE, PROVIDE 3500 x 3600 LG PILES R/W 5-10M VERTICAL FULL LENGTH, TIES AS NOTED ABOVE. TOP OF PILE TO BE FLUSH WITH FINISHED GRADE. COORDINATE POST BASE & LOCATIONS WITH ARCH & CIVIL DRAWINGS. PROVIDE 10 MIL POLY WRAPPED SONOTUBE, GREASED COMPLETELY ON THE INSIDE, FOR TOP 1800 OF PILE.

2024-0002

CrosierKilgour
Structural Engineering & Building Performance

LM esp
LM Architectural Group | Environmental Space Planning
500-136 Market Avenue Winnipeg, Manitoba Canada R3B 0P4
t: 204.942.0681 lm-esp.ca

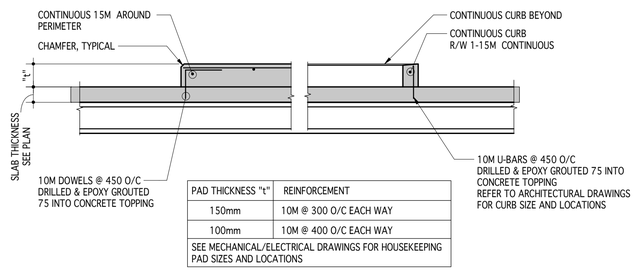

PAD THICKNESS "t"	REINFORCEMENT
150mm	10M @ 300 O/C EACH WAY
100mm	10M @ 400 O/C EACH WAY
SEE MECHANICAL/ELECTRICAL DRAWINGS FOR HOUSEKEEPING PAD SIZES AND LOCATIONS	

E S1.3 HOUSEKEEPING PAD/CURB DETAIL

1 : 20

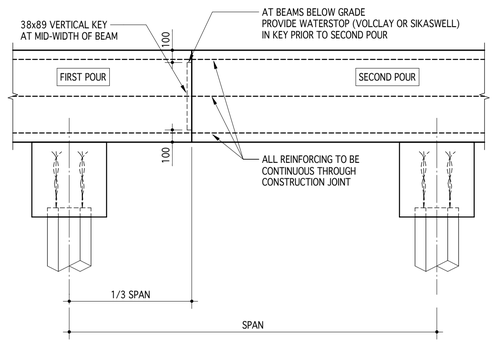

F S1.3 GRADE BEAM CONSTRUCTION JOINT DETAIL

1 : 25

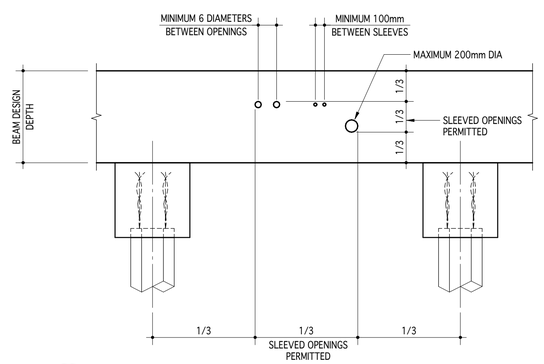

G S1.3 BEAM SLEEVE DIAGRAM

1 : 25

1. ALL BEAM SLEEVE OPENINGS SHALL BE LOCATED WITHIN THE MIDDLE 1/3 OF BEAM DESIGN HEIGHT AND THE MIDDLE 1/3 SPAN TO THE APPROVAL OF THE CONSULTANT.
2. OPENINGS SHALL BE FORMED IN BEAM PRIOR TO CONCRTE PLACEMENT.
3. MECHANICAL AND ELECTRICAL CONTRACTORS TO PROVIDE SLEEVING SHOP DRAWINGS TO THE CONSULTANT PRIOR TO THE START OF CONSTRUCTION. ALL SERVICE SLEEVES SHALL BE INDICATED WITH LOCATIONS AND ELEVATIONS GIVEN.

0	ISSUED FOR CONSTRUCTION	NRM	04.01.24
No.	REVISION/DESCRIPTION	BY	DATE

SEAL

PROVINCE OF MANITOBA
I N.R. MOSCOVITCH
Member
33947
REGISTERED PROFESSIONAL ENGINEER

ENGINEER GEOSCIENTISTS MANITOBA
Certificate of Authorization
Crosier Kilgour & Partners Ltd.
No. 235

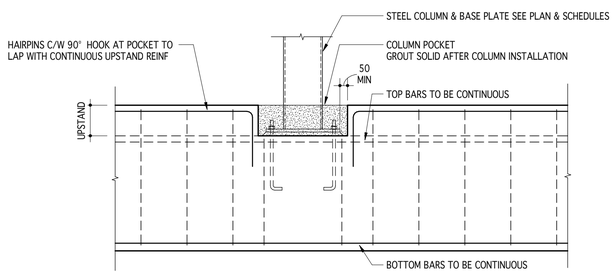

H S1.3 COLUMN POCKET DETAIL AT UPSTAND

1 : 20

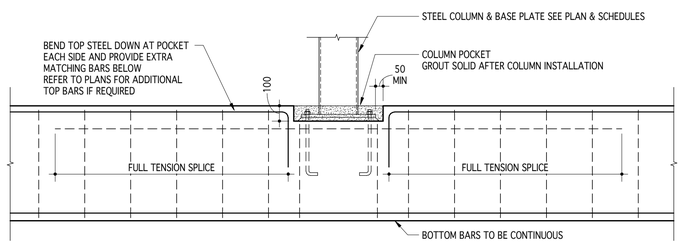

J S1.3 COLUMN POCKET DETAIL AT CONCRETE BEAM (NO UPSTAND)

1 : 20

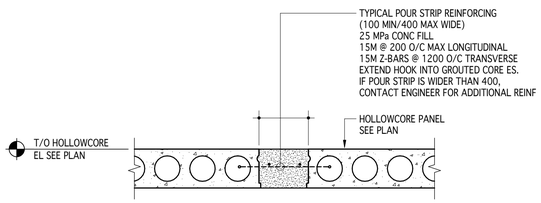

K S1.3 TYPICAL HOLLOWCORE POUR STRIP DETAIL

1 : 20

ZBG	NRM	NRM	NRM
DRAWN	CHECKED	DESIGNED	APPROVED
DATE 2024.04.01	USER APPROVAL		

Winnipeg

THE CITY OF WINNIPEG
ASSETS & PROJECT MANAGEMENT
DEPARTMENT
MUNICIPAL ACCOMMODATIONS DIVISION
3-65 GARRY STREET, R3C 4K4

PROJECT

PEMBINA TRAILS COLLEGIATE
VOCATIONAL WING
TENDER NO. 954-2023B
50 FRONTIER TRAIL, WINNIPEG, MANITOBA, R3Y 2H1

SHEET TITLE

TYPICAL DETAILS

SCALE	PROJECT No:	SHEET No:
As indicated	2020-127	S1.3

DRAWING SHEET SIZE: A1 (594x841) PLOT 1:1