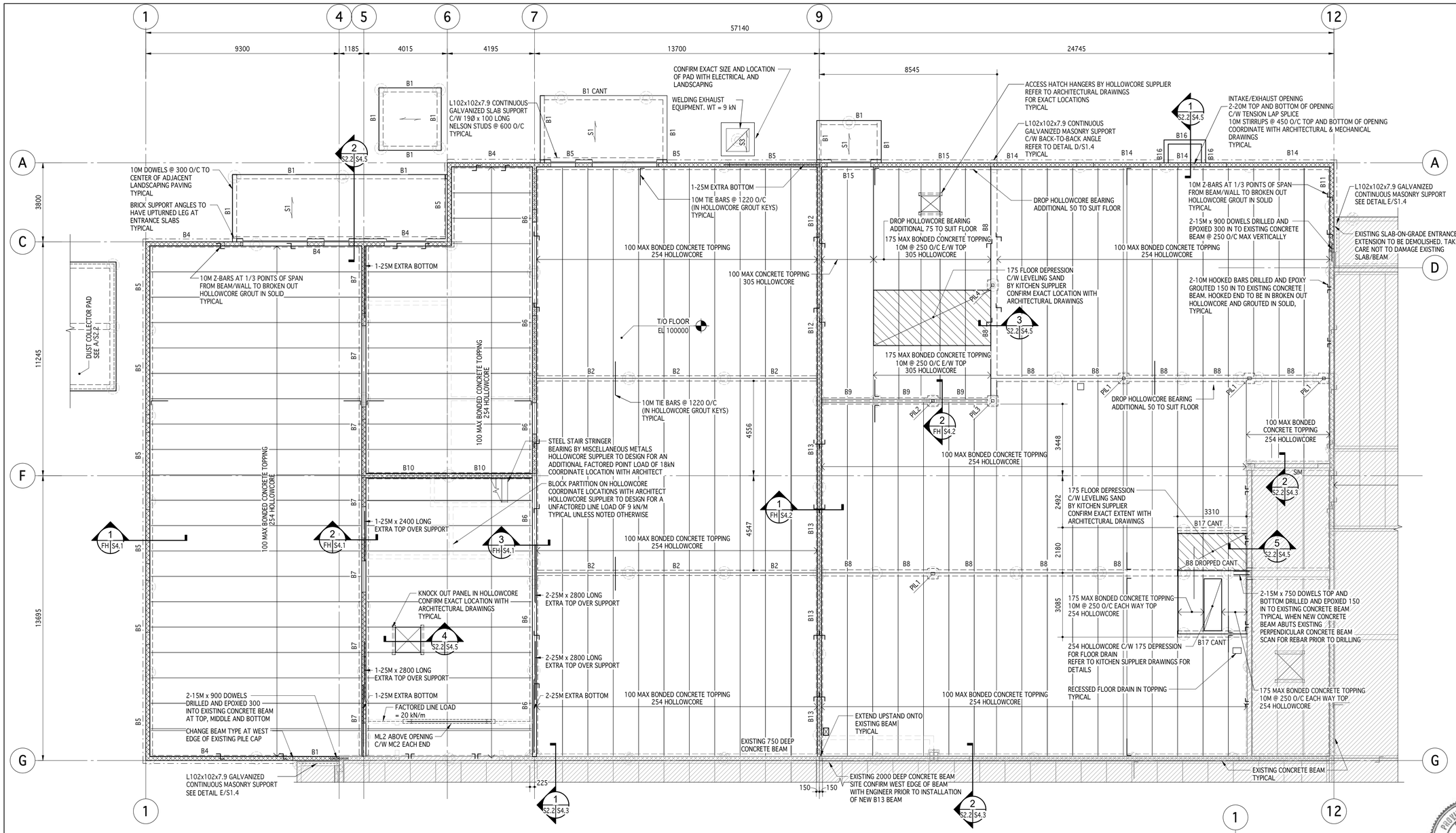

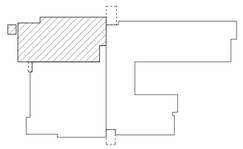

BUILDING KEY PLAN

NOT TO SCALE

2024-0002

CrosierKilgour

Structural Engineering & Building Performance

LM esp

LM Architectural Group | Environmental Space Planning

500-136 Market Avenue Winnipeg, Manitoba Canada R3B 0P4

t: 204.942.0681 lm-esp.ca

No.	REVISION/DESCRIPTION	BY	DATE
0	ISSUED FOR CONSTRUCTION	NRM	04.01.24

SEAL

PROVINCE OF MANITOBA — N.R. MOSCOVITCH — Member 33947 — Expiry 31/12/24 — REGISTERED PROFESSIONAL ENGINEER

ENGINEER GEOSCIENTISTS MANITOBA
Certificate of Authorization
Crosier Kilgour & Partners Ltd.
No. 235

MS/CJM	NRM	NRM	NRM
DRAWN	CHECKED	DESIGNED	APPROVED

DATE 2024.04.01 USER APPROVAL

Winnipeg

THE CITY OF WINNIPEG
ASSETS & PROJECT MANAGEMENT DEPARTMENT
MUNICIPAL ACCOMMODATIONS DIVISION
3–65 GARRY STREET, R3C 4K4

PROJECT

PEMBINA TRAILS COLLEGIATE
VOCATIONAL WING
TENDER NO. 954-2023B

50 FRONTIER TRAIL, WINNIPEG, MANITOBA, R3Y 2H1

SHEET TITLE

MAIN FLOOR FRAMING PLAN

SCALE	PROJECT No:	SHEET No:
As indicated	2020-127	S2.2

DRAWING SHEET SIZE: A1 (594x841) PLOT 1:1

1 S2.2 MAIN FLOOR FRAMING PLAN

1 : 100

FLOOR DESIGN LOADS:

DESIGN LIVE LOAD: 4.8 kPa

DESIGN DEAD LOAD: 254 HOLLOWCORE = 6.00 kPa
(3.35 kPa HOLLOWCORE, 2.35 kPa TOPPING, 0.30 kPa FLOOR FINISH, MECHANICAL & ELECTRICAL)
305 HOLLOWCORE EVERYWHERE UNLESS NOTED= 6.63 kPa
(3.98 kPa HOLLOWCORE, 2.35 kPa TOPPING, 0.30 kPa FLOOR FINISH, MECHANICAL & ELECTRICAL)
PARTITION LOAD = 0.5kPa (LIVE LOAD = 2.4kPa ONLY)

FLOOR NOTES

- CONFIRM ALL MECHANICAL UNIT WEIGHTS & SIZES WITH MECHANICAL PRIOR TO HOLLOWCORE & OPEN WEB STEEL JOIST FABRICATION.
- ALL STEEL STUD FRAMING TO BE DESIGNED & DETAILED IN SHOP DRAWINGS PROVIDED BY STEEL STUD SUPPLIER. SHOP DRAWINGS TO BE SEALED BY STEEL STUD SUPPLIERS DESIGN ENGINEER
- CONCRETE TOPPING TO BE REINFORCED WITH 10M @ 450 O/C EACH WAY TOP, TYPICAL UNLESS NOTED.
- REFER TO DRAWING S5.1 FOR PILASTER DETAILS AT CONCRETE BEAMS.
- WHERE NEW CONCRETE IS TO CONNECT TO EXISTING CONCRETE, ROUGHEN EXISTING SURFACE TO ACHIEVE A PROFILE OF ICRI-CAP-5 OR GREATER.

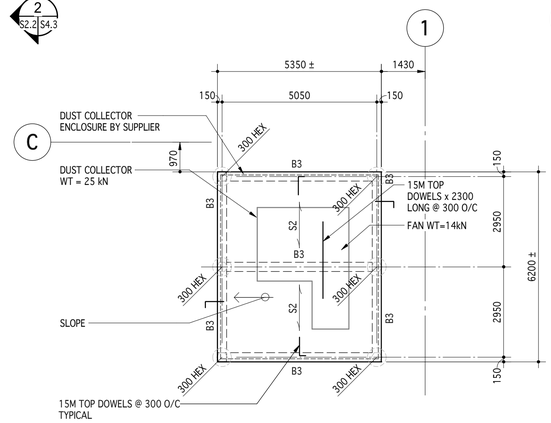

A S2.2 DUST COLLECTOR PAD

1 : 100

- COORDINATE SIZE AND LOCATION OF PAD WITH MECHANICAL/ARCHITECTURAL DRAWINGS
- CONFIRM TOP OF PILE CAP ELEVATION BASED ON SLAB SLOPE AND FINAL SLAB ELEVATION. REFER TO ARCHITECTURAL AND CIVIL DRAWINFS
- TOP OF CONCRETE SLAB TO MATCH TOP OF BEAM

LMesp COMM. NO. 1929V