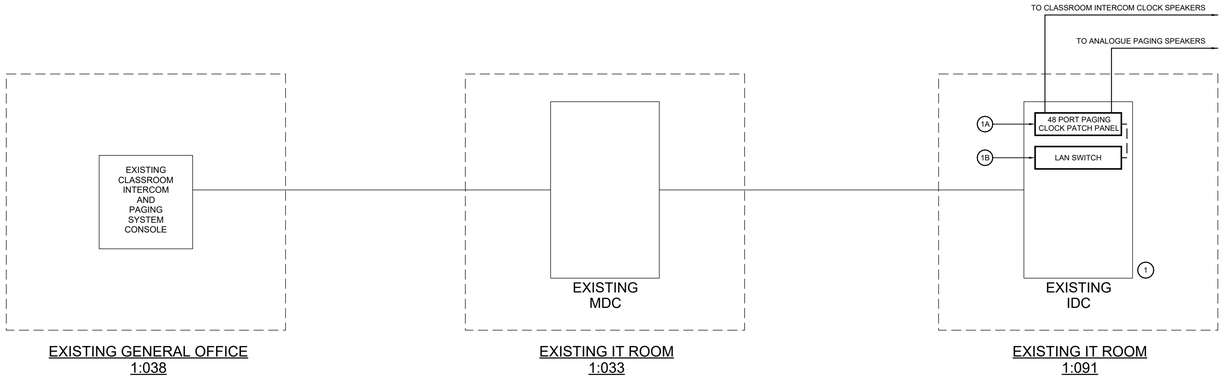

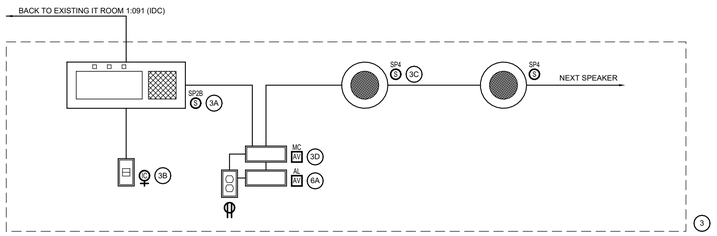

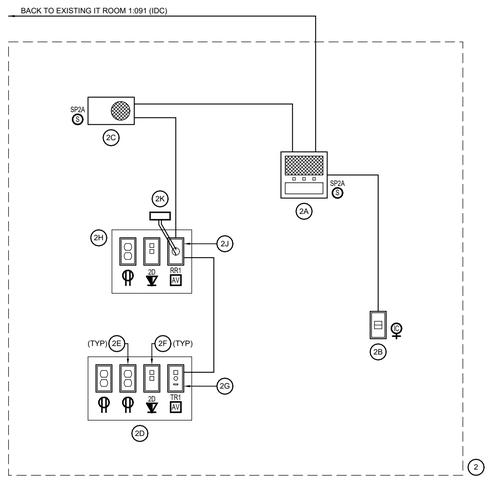

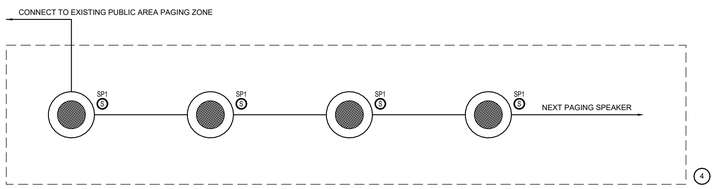

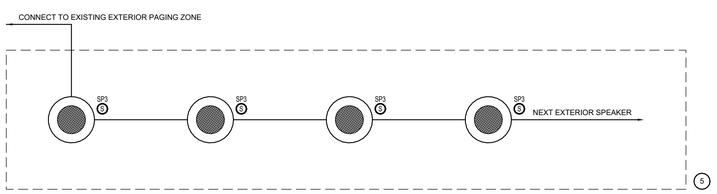

GENERAL NOTES

A. REFER TO FLOOR PLANS FOR EQUIPMENT AND DEVICE LOCATIONS.
B. CABLE TRAY AND J-HOOKS SHALL BE UTILIZED FOR CLASSROOM INTERCOM, PAGING AND AV SOLUTION WIRING PATHWAY. UTILIZE CONDUIT WITHIN NON-ACCESSIBLE SPACES ONLY.
C. ALL WIRING SHALL BE FT6 IN CONDUIT.
D. ALL IP CABLING SHALL BE PROVIDED AS PER DIV.27.
E. PROVIDE ALTERNATE PRICE FOR INSTRUCTIONAL AUDIO SYSTEMS:
 E.A. BASE BID: PROVIDE ROUGH-IN FOR INSTRUCTIONAL AUDIO SYSTEMS DEVICES AND EQUIPMENT AS INDICATED.
 E.B. ALTERNATE PRICE: PROVIDE ALTERNATE PRICE TO INSTALL, WIRE AND CONNECT SCHOOL DIVISION SUPPLIED DEVICES AND EQUIPMENT AS INDICATED.
F. PROVIDE ALTERNATE PRICE FOR MASTER CLOCK AND PUBLIC ADDRESS SYSTEMS.
 F.A. BASE BID: PROVIDE ROUGH-IN FOR MASTER CLOCK AND PUBLIC ADDRESS SYSTEMS DEVICES AND EQUIPMENT AS INDICATED.
 F.B. ALTERNATE PRICE: PROVIDE ALTERNATE PRICE TO INSTALL, WIRE AND CONNECT SCHOOL DIVISION SUPPLIED DEVICES AND EQUIPMENT AS INDICATED. INCLUDE ALL OPERATIONAL TESTING.

KEY NOTES

1. NONE.

EQUIPMENT LIST

1	EXISTING CLASSROOM INTERCOM AND PAGING HEAD-END RACK LOCATED IN IT ROOM
1A	INTERCOM CLOCK SPEAKER PATCH PANEL - PROVIDED BY EC, INCLUDING TESTING AND TERMINATION (BASE PRICE)
1B	NETWORK SWITCH - PROVIDED BY SCHOOL DIVISION (NIC)
2	CLASSROOM INTERCOM CLOCK AND AV SOLUTION TYPICAL OF THE FOLLOWING: - DESIGN LAB 1:101
2A	CLASSROOM INTERCOM CLOCK SPEAKER (SP2A): - MODEL: ADVANCED NETWORK DEVICES IPSWD-RWB - SUPPLIED BY SCHOOL DIVISION (NIC) - ROUGH-IN BY EC (BASE PRICE) - WIRED BY EC INCLUDING TERMINATION AND TESTING (BASE PRICE) - INSTALLED AND CONNECTED BY EC (ALTERNATE PRICE) NOTE: C/W CAT6 CABLING BACK TO NEAREST IDC (BASE PRICE) NOTE: C/W 2/C #18AWG TO INTERCOM CALL SWITCH (BASE PRICE) NOTE: C/W 2/C #18AWG TO CLASSROOM INSTRUCTIONAL AUDIO SPEAKER (BASE PRICE)
2B	CLASSROOM INTERCOM CALL SWITCH (IC) - SUPPLIED BY SCHOOL DIVISION (NIC) - ROUGH-IN BY EC (BASE PRICE) - WIRED BY EC INCLUDING TESTING AND TERMINATION (BASE PRICE) - INSTALLED AND CONNECTED BY EC (ALTERNATE PRICE) NOTE: C/W 2/C-#18AWG TO CLASSROOM INTERCOM CLOCK SPEAKER (BASE PRICE)
2C	CLASSROOM INSTRUCTIONAL AUDIO SPEAKER: - MODEL: LIGHTSPEED TOPCAT - SUPPLIED BY SCHOOL DIVISION (NIC) - ROUGH-IN BY EC (BASE PRICE) - 120V/15A CIRCUIT BY EC (BASE PRICE) - INSTALLED, WIRED AND CONNECTED BY EC INCLUDING TERMINATION AND TESTING (BASE PRICE) NOTE: C/W 2/C #18AWG TO CLASSROOM INTERCOM CLOCK SPEAKER (BASE PRICE)
2D	CLASSROOM TEACHERS WORKSTATION
2E	DUPLEX RECEPTACLE - PROVIDED BY EC (BASE PRICE)
2F	COMMUNICATIONS OUTLET - PROVIDED BY EC (BASE PRICE)
2G	HD-BASE-T TRANSMITTER WALL PLATE (TR1) MODEL: DIGITALINX DL-1H1A1U-WPKT-W - ROUGH-IN BY EC (BASE PRICE) - SUPPLIED BY SCHOOL DIVISION (NIC) - WIRED BY EC INCLUDING TESTING AND TERMINATION (BASE PRICE) - INSTALLED, AND CONNECTED BY EC (BASE PRICE) NOTE: C/W TWO (2) CAT6 SHIELDED CABLE AND RJ-45 CONNECTORS TO HD-BASE-T RECEIVER BY EC (BASE PRICE)
3	VOCATIONAL CLASSROOM INTERCOM CLOCK AND AV SOLUTION TYPICAL OF THE FOLLOWING: - CONSTRUCTION & WOOD TECHNOLOGY 1:100 - MACHINING & WELDING TECHNOLOGY 1:103 - CULINARY ARTS 1:106 - FOOD & NUTRITION 1:107
3A	LARGE INTERCOM CLOCK SPEAKER (SP2B) - MODEL: ADVANCED NETWORK DEVICES IPCSL-RWB - SUPPLIED BY SCHOOL DIVISION (NIC) - ROUGH-IN BY EC (BASE PRICE) - WIRED BY EC INCLUDING TERMINATION AND TESTING (BASE PRICE) - INSTALLED AND CONNECTED BY EC (ALTERNATE PRICE) NOTE: C/W CAT6 CABLING BACK TO NEAREST IDC (BASE PRICE) NOTE: C/W 2/C #18AWG TO INTERCOM CALL SWITCH (BASE PRICE) NOTE: C/W WIRING TO MEDIA CONNECTOR (BASE PRICE)
3B	CLASSROOM INTERCOM CALL SWITCH (IC) - SUPPLIED BY SCHOOL DIVISION (NIC) - ROUGH-IN BY EC (BASE PRICE) - WIRED BY EC INCLUDING TESTING AND TERMINATION (BASE PRICE) - INSTALLED AND CONNECTED BY EC (ALTERNATE PRICE) NOTE: C/W 2/C-#18AWG TO LARGE INTERCOM CLOCK SPEAKER (BASE PRICE)
3C	ANALOGUE SPEAKER (SP4) - SP4A (RECESSED -FLUSH) MODEL: TOA F-122CU C/W TOA FLUSH CEILING BACKBOX - SP4B SP4A (PENDANT) MODEL: TOA F-122CU C/W TOA Q-HY-BC1W BACKBOX AND SUSPENSION PIPE - SUPPLIED BY SCHOOL DIVISION (NIC) - ROUGH-IN BY EC (BASE PRICE) - WIRED BY EC INCLUDING TERMINATION AND TESTING (BASE PRICE) - INSTALLED AND CONNECTED BY EC (ALTERNATE PRICE) NOTE: C/W 2/C-#18AWG TO MEDIA CONNECTOR (BASE PRICE)
3D	MEDIA CONNECTOR (AV-MC) - MODEL: LIGHTSPEED 975 - SUPPLIED BY SCHOOL DIVISION (NIC) - ROUGH-IN BY EC (BASE PRICE) - WIRED BY EC INCLUDING TESTING AND TERMINATION (BASE PRICE) - INSTALLED AND CONNECTED BY EC (ALTERNATE PRICE) NOTE: C/W WIRING TO LARGE INTERCOM CLOCK SPEAKER (BASE PRICE) NOTE: C/W 2/C-#18AWG TO PENDANT ANALOGUE SPEAKER (BASE PRICE) NOTE: C/W WIRING TO ASSISTIVE LISTENING TRANSMITTER (BASE PRICE)
4	INTERIOR PAGING SOLUTION
4A	PAGING SPEAKER (SP1A) - MODEL: BOSCH LHM 0606/XX C/W BACKBOX - SUPPLIED BY SCHOOL DIVISION (NIC) - ROUGH-IN BY EC (BASE PRICE) - WIRED BY EC (BASE PRICE) - INSTALLED AND TERMINATED BY EC (ALTERNATE PRICE) NOTE: C/W 2/C #16AWG SHIELDED BACK TO NEAREST IDC (BASE PRICE)
5	EXTERIOR PAGING SOLUTION
5A	PAGING SPEAKER (SP3) - MODEL: BOSCH LBC 34XX - SUPPLIED BY SCHOOL DIVISION (NIC) - ROUGH-IN BY EC (BASE PRICE) - WIRED BY EC (BASE PRICE) - INSTALLED AND TERMINATED BY EC (ALTERNATE PRICE) NOTE: C/W 2/C #16AWG SHIELDED BACK TO NEAREST IDC (BASE PRICE)
6	ASSISTIVE LISTENING SYSTEM TYPICAL OF THE FOLLOWING: - CONSTRUCTION & WOOD TECHNOLOGY 1:100 - MACHINING & WELDING TECHNOLOGY 1:103 - CULINARY ARTS 1:106 - FOOD & NUTRITION 1:107
6A	ASSISTIVE LISTENING RF TRANSMITTER (AV-AL) - MODEL: LISTEN TECHNOLOGIES LT-800-216-01 - PROVIDED BY EC (BASE PRICE) NOTE: C/W ANTENNA KIT (BASE PRICE) NOTE: C/W AUDIO PATCH CABLE (3.5MM) TO MEDIA CONNECTOR (BASE PRICE) NOTE: C/W MINIMUM FOUR (4) LR-5200-216 RECEIVER (BASE PRICE) NOTE: C/W RECEIVER CHARGING TRAY (BASE PRICE) NOTE: C/W FOUR (4) UNIVERSAL EAR SPEAKERS (BASE PRICE) NOTE: C/W TWO (2) INTEGRATED NECK LOOPS/LANYARDS (BASE PRICE)

ENGINEERS GEOSCIENTISTS MANITOBA
Certificate of Authorization
Epp Siepman Engineering Inc.
No. 4035

This is a print of a document that has been electronically authenticated with technology authorized by the Engineers Geoscientists Manitoba. The original is in electronic form.

epp siepman engineering
400 - 136 Market Avenue
Winnipeg, MB R3B 0P4
T 204 453 1080

LM esp
LM Architectural Group | Environmental Space Planning
500-136 Market Avenue Winnipeg, Manitoba Canada R3B 0P4
t: 204.942.0681 lm-esp.ca

No.	REVISION/DESCRIPTION	BY	DATE
0	ISSUED FOR TENDER	JS/MP	24-04-01

SEAL

EW DRAWN	MP/KG CHECKED	KG DESIGNED	MP/KG APPROVED
DATE 2024-04-01	USER APPROVAL		

Winnipeg
THE CITY OF WINNIPEG
ASSETS & PROJECT MANAGEMENT DEPARTMENT
MUNICIPAL ACCOMMODATIONS DIVISION
3-65 GARRY STREET, R3C 4K4

PROJECT
PEMBINA TRAILS COLLEGIATE
VOCATIONAL WING
TENDER NO. 954-2023B
50 FRONTIER TRAIL, WINNIPEG, MANITOBA, R3Y 2H1

SHEET TITLE
Intercom Paging and AV System Schematic

SCALE	PROJECT No:	SHEET No:
1 : 1	2020-127	E5.2

DRAWING SHEET SIZE: A1 (594x841) PLOT 1:1
ESE 24049