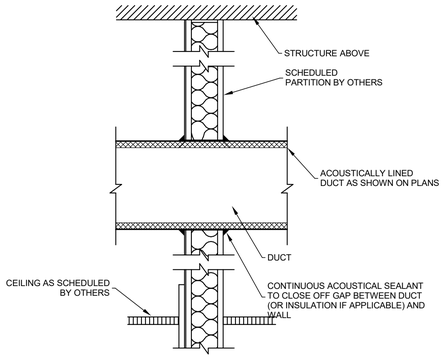

PENETRATIONS OF ACOUSTICAL PARTITIONS BY DUCTWORK SHALL BE ACOUSTICALLY SEALED AS SHOWN. ALL GAPS LARGER THEN 1/2" SHALL BE COVERED WITH GYPSUM BOARD, LAPPED A MINIMUM OF 2" AND SCREWED BEFORE USING ACOUSTICAL SEALANT, BY OTHERS.

RETURN DUCT PENETRATING THROUGH WALL WITH STC RATING BELOW 45

SCALE: N.T.S.

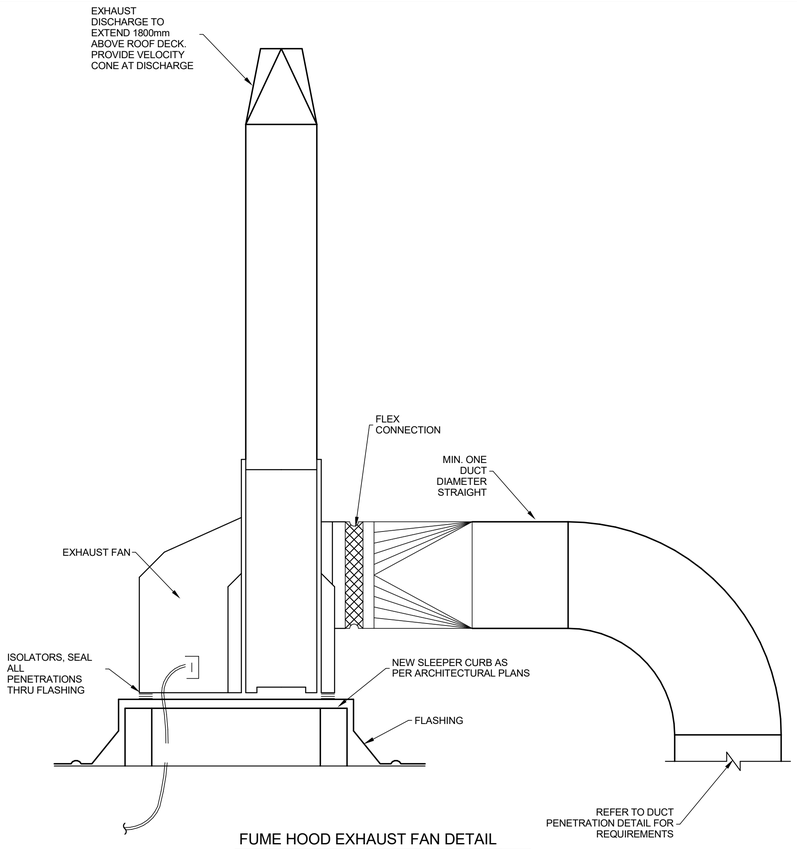

FUME HOOD EXHAUST FAN DETAIL

SCALE: N.T.S.

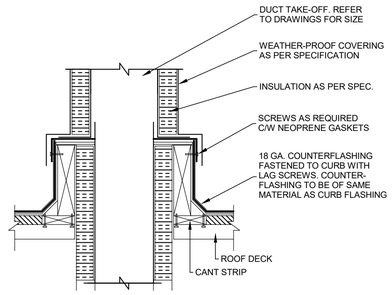

ROOF PENETRATION DETAIL

SCALE: N.T.S.

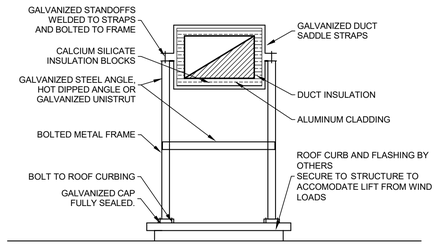

DUCT SUPPORT DETAIL (ALL EXTERIOR MOUNTED DUCTWORK)

SCALE: N.T.S.

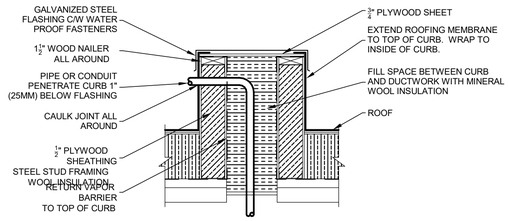

PIPE/ELECTICAL PENETRATION CURB DETAIL (FLAT ROOF, MEMBRANE)

SCALE: N.T.S.

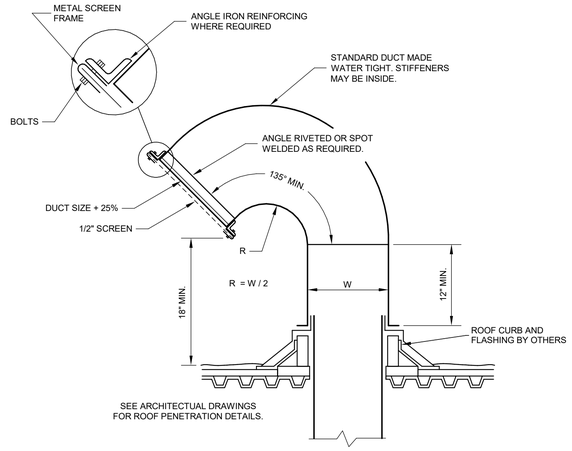

TYPICAL GOOSENECK DETAIL

SCALE: N.T.S.

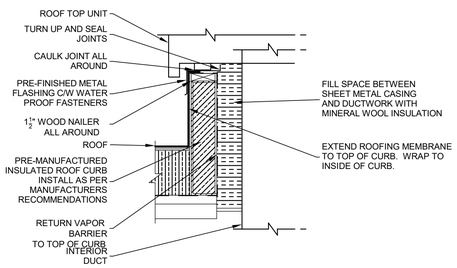

ROOF CURB DETAIL (FLAT ROOF, MEMBRANE, PRE-MANUFACTURED ROOF CURB, LARGER MECH EQUIPMENT)

SCALE: N.T.S.

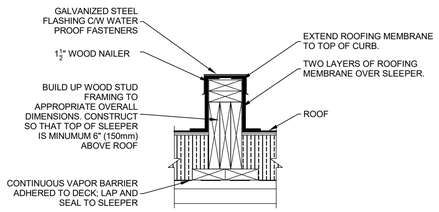

SLEEPER DETAIL, BELOW ROOF (FLAT ROOF, MEMBRANE)

SCALE: N.T.S.

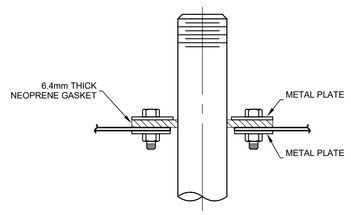

PIPE PENETRATION OF CASING DETAIL

SCALE: N.T.S.

ENGINEERS GEOSCIENTISTS MANITOBA
Certificate of Authorization
Epp Siepman Engineering Inc.
No. 4035

This is a print of a document that has been electronically authenticated with technology authorized by the Engineers Geoscientists Manitoba. The original is in electronic form.

epp siepman engineering
400 - 136 Market Avenue
Winnipeg, MB R3B 0P4
T 204 453 1080

LM esp
LM Architectural Group | Environmental Space Planning
500-136 Market Avenue Winnipeg, Manitoba Canada R3B 0P4
t: 204.942.0681 lm-esp.ca

No.	REVISION/DESCRIPTION	BY	DATE
0	ISSUED FOR CONSTRUCTION	JS/MP	24-04-01

SEAL

PROVINCE OF MANITOBA
JS SOPELLENBERG
Member
31336
2024-04-01
REGISTERED PROFESSIONAL ENGINEER

EB	JS	JS	JS
DRAWN	CHECKED	DESIGNED	APPROVED
DATE 2024-04-01	USER APPROVAL		

Winnipeg
THE CITY OF WINNIPEG
ASSETS & PROJECT MANAGEMENT DEPARTMENT
MUNICIPAL ACCOMMODATIONS DIVISION
3-65 GARRY STREET, R3C 4K4

PROJECT
PEMBINA TRAILS COLLEGIATE
VOCATIONAL WING
TENDER NO. 954-2023B
50 FRONTIER TRAIL, WINNIPEG, MANITOBA, R3Y 2H1

SHEET TITLE
Details - HVAC 5

SCALE	PROJECT No:	SHEET No:
1 : 1	2020-127	MH4.5

DRAWING SHEET SIZE: A1 (594x841) PLOT 1:1
ESE 24049