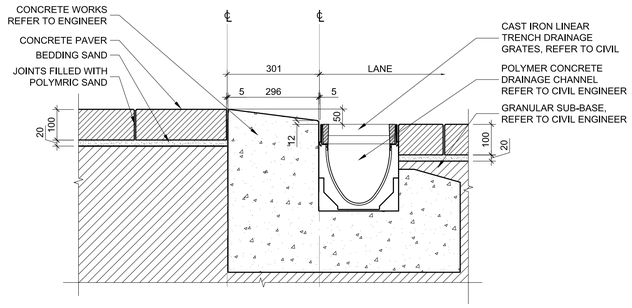

7 L-1010 L-1501 CONCRETE PAVER CURB DETAIL WITH LINEAR DRAIN - NORTH LANE

SECTION
1:10

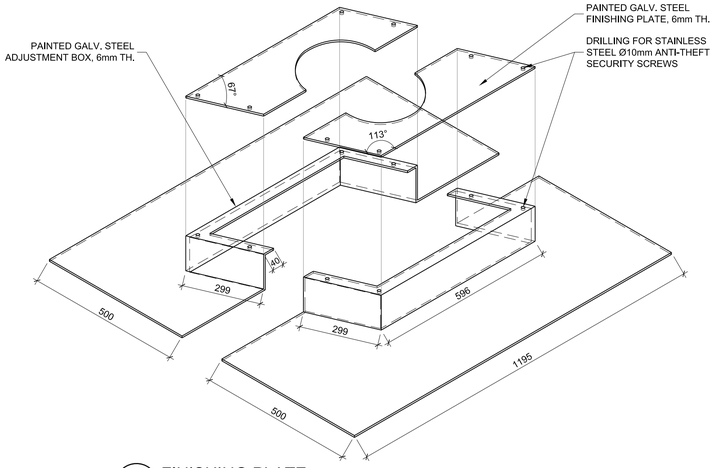

3 L-1010 L-1501 FINISHING PLATE

AXONOMETRY
1:10

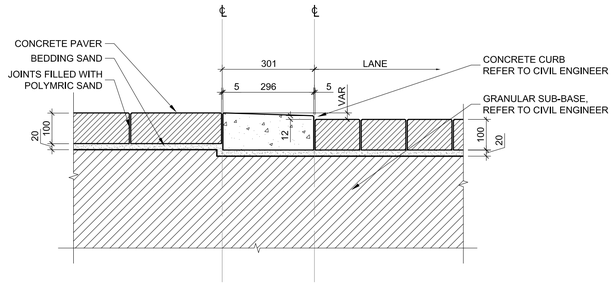

6 L-1010 L-1501 CONCRETE PAVER CURB DETAIL TRANSITION TO STREET - NORTH LANE

SECTION
1:10

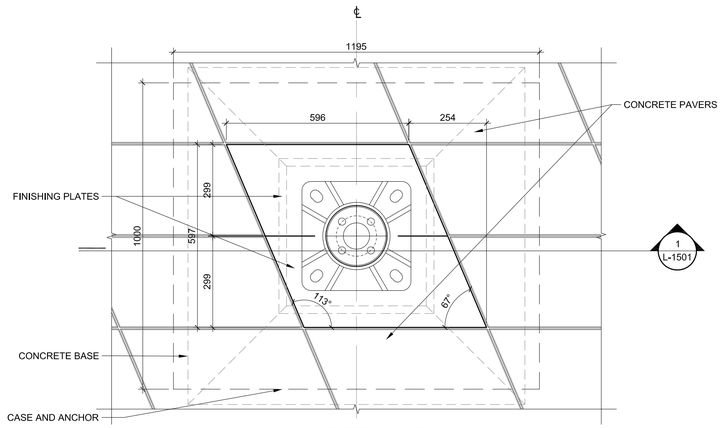

2 L-1010 L-1501 ANCHOR AND CONCRETE BASE FOR LIGHTING AT CONCRETE PAVERS

PLAN
1:10

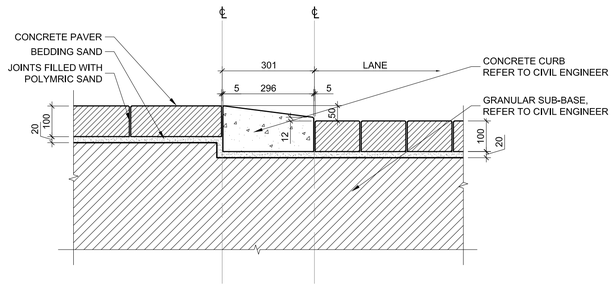

5 L-1010 L-1501 CONCRETE PAVER TYPICAL CURB DETAIL - NORTH LANE

SECTION
1:10

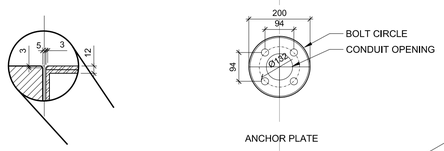

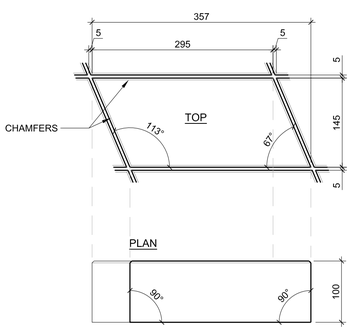

9 L-1010 L-1501 CUSTOM CONCRETE PAVER - TYPE A - PEDESTRIAN

PLAN AND ELEVATION
1:5

8 L-1010 L-1501 CUSTOM CONCRETE PAVER - TYPE B - VEHICLE TRAFFIC

PLAN AND ELEVATION
1:5

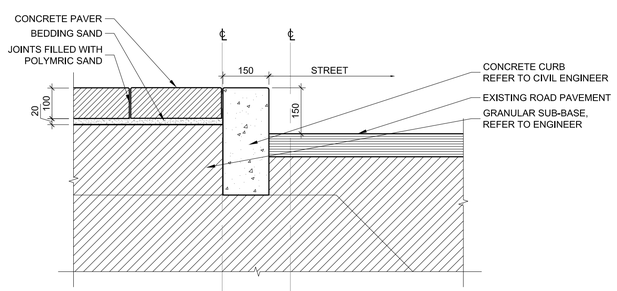

4 L-1010 L-1501 CONCRETE PAVER CURB DETAIL - STREET

SECTION
1:10

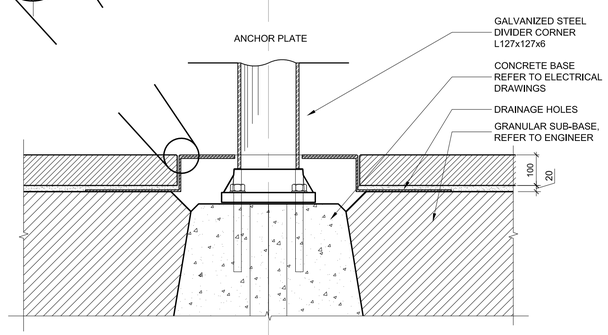

1 L-1010 L-1501 ANCHOR AND CONCRETE BASE FOR LIGHTING AT CONCRETE PAVERS

SECTION
1:10

ALL DRAWINGS, SPECIFICATIONS AND RELATED DOCUMENTS ARE PROPERTY OF THE ARCHITECT. REPRODUCTION OF DRAWINGS, SPECIFICATIONS AND RELATED DOCUMENTS IN ANY FORMS IS STRICTLY FORBIDDEN WITHOUT THE WRITTEN PERMISSION OF THE ARCHITECT.

CLIENT :
MARKET LANDS INC.

PROJECT :
MARKET LANDS
MIXED USE BUILDING
WINNIPEG, MANITOBA

ARCHITECT :
DAOUST LESTAGE
architecture - design urbain - paysage
DAOUST LESTAGE
3575 St-Laurent Blvd #710, Montreal QC, H2X 2T7
info@daoustlestage.com
+1 514 982 0877

NUMBER TEN ARCHITECURAL GROUP
310 - 115 Bannatyne Ave. Winnipeg, MB, R3B 0R3
winnipeg@numberten.com
+1 204-942-0981

ELECTRICAL CONSULTANT :
TETRA TECH
TETRA TECH
3475 East Foothill Blvd, Pasadena CA, 91107-6024
info@tetratech.com
+1 626 351 4664

STRUCTURAL CONSULTANT :
ENTUITIVE
ENTUITIVE
200 University Ave, 7th Floor, Toronto ON, M5H 3C6
entuitive.com
+1 416 477 5832

CIVIL CONSULTANT :
WSP CANADA INC.
1600 Buffalo Place, Winnipeg, Manitoba, R3T 6B8
info@wsp.com
+1 204 259 1659

SEAL :
PROVINCE OF MANITOBA
RENÉE DAOUST
REGISTERED ARCHITECT

NO.	DESCRIPTION	DATE
0	ISSUED FOR TENDER	2024-02-02
A	ISSUED FOR INFORMATION	2023-11-22

KEY PLAN :
Provencher Boulevard
King St
William Ave
N

DISCIPLINE : LANDSCAPE

LOT : SITE DEVELOPMENT

TITLE : GENERIC DETAILS

DRAWN BY : G.F.	FILE : 694-19
DEVELOPED BY : R.S.	SCALE : INDICATED
APPROVED BY : R.D.	PAGE : L-1501
PRINT DATE : 2024-02-02	