ISO A1 - 594mm x 841mm

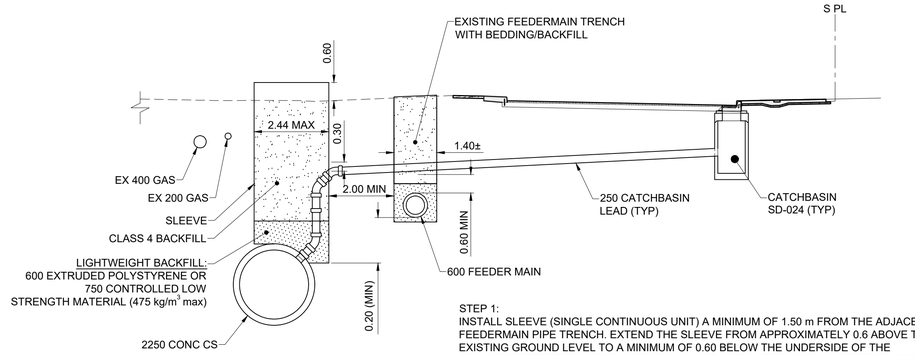

CB LEAD INSTALLATION TO 2250 CONC CS
STA 0+175.738 TO 0+306.793

SCALE: 1:100
0 2.5 5.0m

STEP 1:
INSTALL SLEEVE (SINGLE CONTINUOUS UNIT) A MINIMUM OF 1.50 m FROM THE ADJACENT FEEDERMAIN PIPE TRENCH. EXTEND THE SLEEVE FROM APPROXIMATELY 0.6 ABOVE THE EXISTING GROUND LEVEL TO A MINIMUM OF 0.60 BELOW THE UNDERSIDE OF THE ADJACENT FEEDERMAIN. THE SLEEVE SHALL BE INSTALLED BY **NON-HAMMERING AND NON-VIBRATING METHODS** AND SHALL BE ADVANCED AHEAD OF THE MATERIAL REMOVAL FROM WITHIN THE SLEEVE.

STEP 2:
CONTINUE TO ADVANCE THE SLEEVE AND REMOVING LIFTS OF MATERIAL FROM WITHIN THE SLEEVE UNTIL THE CROWN OF THE COMBINED SEWER IS REACHED.

STEP 3:
ENSURE ALL WOOD PLANKS/FORMS ARE REMOVED FROM CROWN OF COMBINED SEWER PRIOR TO INSTALLATION OF THE CB LEAD RISER. INSTALL VERTICAL RISER INTO CROWN OF COMBINED SEWER. COMPACT BEDDING IN 0.3 m LIFTS (MAX) WHILE REMOVING SLEEVE IN 0.3 m INCREMENTS.

STEP 4:
CONNECT CATCHBASIN LEADS WITH 2-45 VERTICAL BENDS TO THE RISERS AND CONTINUE THE COMPACTION OF BEDDING/BACKFILL IN INCREMENTS OF 0.3 m (MAX) UNTIL SLEEVE IS COMPLETELY REMOVED AND EXCAVATION IS BACKFILLED AND COMPACTED.

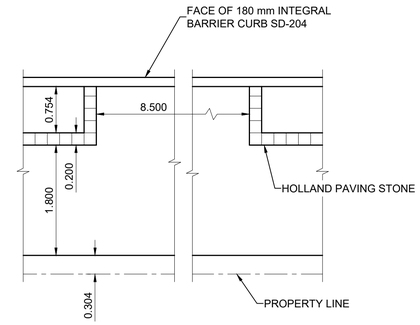

TYPICAL BUS STOP PLAN

SCALE: 1:50
0 0.5 1.0 2.0 3.0m

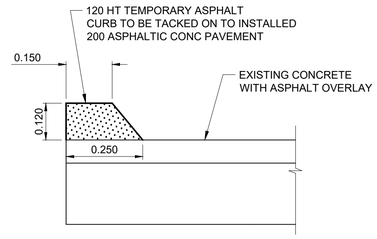

TEMPORARY ASPHALT CURB

SCALE: 1:10
0 0.25 0.50m

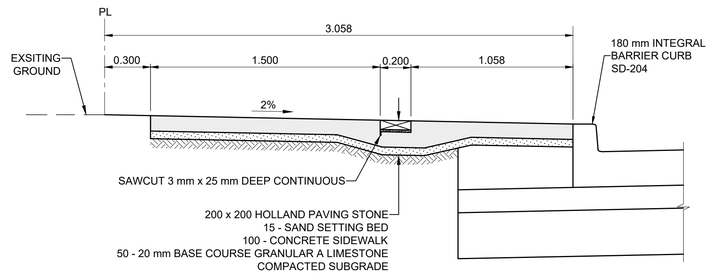

TYPICAL SIDEWALK FULL WIDTH SECTION

SCALE: 1:20
0 0.5 1.0m

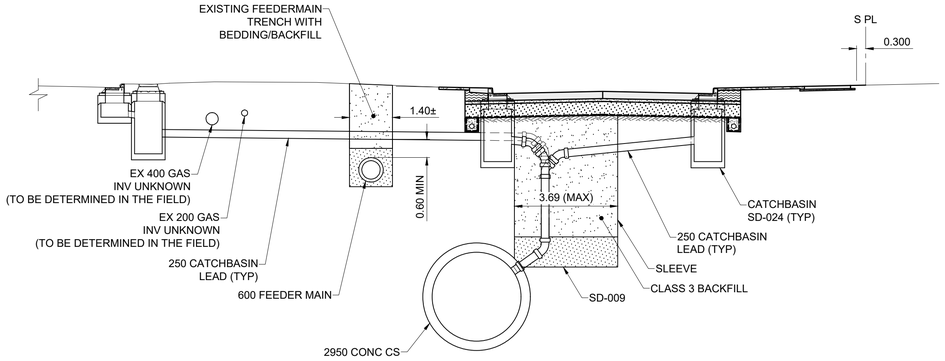

CB LEAD INSTALLATION TO 2950 CONC SRS

SCALE: 1:100
0 2.5 5.0m

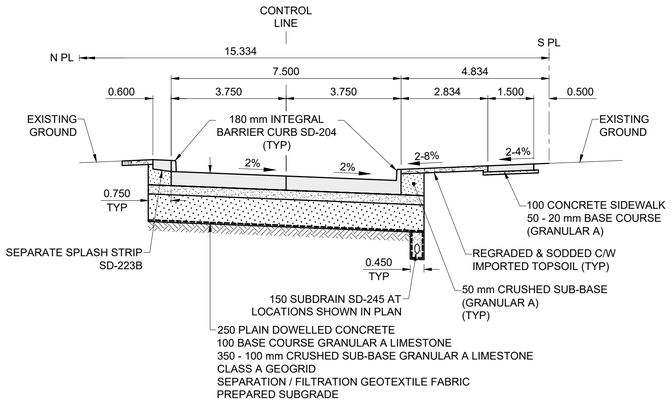

TYPICAL PAVEMENT RECONSTRUCTION SECTION
STA 2+333 TO STA 2+476

SCALE: 1:100 H
0 2.0 4.0m
0 1.0 2.0m
SCALE 1:50 V

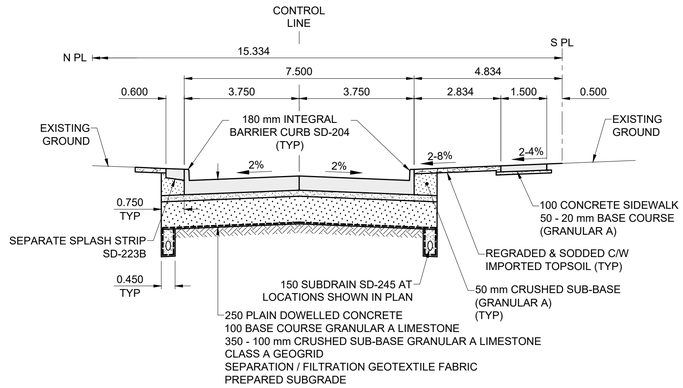

TYPICAL PAVEMENT RECONSTRUCTION SECTION
STA 2+476 TO STA 4+220

SCALE: 1:100 H
0 2.0 4.0m
0 1.0 2.0m
SCALE 1:50 V

ENGINEERS GEOSCIENTISTS MANITOBA
Certificate of Authorization
MORRISON HERSHFIELD
No. 1736

TENDER No. 155-2024

METRIC
WHOLE NUMBERS INDICATE MILLIMETRES
DECIMALIZED NUMBERS INDICATE METRES

	GAS			MANHOLE			CONCRETE PAVEMENT	
	MTS HANDWELL/PEDESTAL			CATCH BASIN/CATCH PIT			CONC SIDEWALK/MEDIAN	
	HYDRO HANDWELL/CABINET			CURB INLET WITH BOX			ASPHALT PAVEMENT	
	CATV/FIBRE OPTIC			TREE			PAVING STONE	
	TRAFFIC SIGNALS/PIT		TH-12	TEST HOLE			GRAVEL	
	LAND DRAINAGE SEWER			PROPERTY LINE			RAMP CURB	
	SANITARY/COMBINED SEWER			SURVEY BAR			PLANING/REMOVAL	
	CB LEAD/SSP/DCP			FENCE				
	WATERMAIN			BOC/EDGE OF PAVEMENT				
	SUBDRAIN		33.000	ELEVATION	33.333			
	DITCH			TRAFFIC SIGN				
EXISTING	LEGEND - PLAN	NEW	EXISTING	LEGEND - PLAN	NEW	EXISTING	LEGEND - PLAN	NEW

LOCATION APPROVED
UNDERGROUND STRUCTURES

SUPR. U/G STRUCTURES COMMITTEE — DATE

NOTE:
LOCATION OF UNDERGROUND STRUCTURES AS SHOWN ARE BASED ON THE BEST INFORMATION AVAILABLE BUT NO GUARANTEE IS GIVEN THAT ALL EXISTING UTILITIES ARE SHOWN OR THAT THE GIVEN LOCATIONS ARE EXACT. CONFIRMATION OF EXISTENCE AND EXACT LOCATION OF ALL SERVICES MUST BE OBTAINED FROM THE INDIVIDUAL UTILITIES BEFORE PROCEEDING WITH CONSTRUCTION.

BM 26-03 Bolt in 14.3 m Conc. pile, 2.2 m S. of N.L. of Inkster Blvd., and on W.L. of Aikins St.
ELEV 230.992 m

No.	REVISIONS	YY/MM/DD	BY
B	ISSUED FOR TENDER	24/03/22	GFC
A	ISSUED FOR CLIENT REVIEW	24/03/20	GFC

MORRISON HERSHFIELD now Stantec

DESIGNED BY	GFC	CHECKED BY	RPB
DRAWN BY	KMB	APPROVED BY	RPB
HOR SCALE / VERT SCALE	AS NOTED	RELEASED FOR CONSTRUCTION	
DATE	MARCH 20, 2024	DATE	

PROFESSIONAL'S SEAL
PROVINCE OF MANITOBA
G.F. COOLIDGE
Member
24465
2024-03-22
REGISTERED PROFESSIONAL ENGINEER

CONSULTANT FILE NAME
2303678-Inkster-PP-RECON.dwg

Winnipeg
THE CITY OF WINNIPEG
PUBLIC WORKS DEPARTMENT
ENGINEERING DIVISION

2024-2025 REGIONAL STREET RENEWAL PROGRAM
EB INKSTER BOULEVARD
SINCLAIR STREET TO MAIN STREET
SECTIONS AND DETAILS
TYPICAL SECTIONS AND DETAILS

CITY DRAWING NUMBER: P-3575-33
SHEET 33 OF 33
DRAWING NUMBER: 33

X:\Proj\2023\2303678\00-2023-2025 McGregor-Inkster Renewals\09. CAD\Inkster EB\07 Sheets\2303678-Inkster-PP-RECON.dwg Last Saved: 3/22/2024 2:43 PM by KBerard Plotted: 3/22/2024 3:07 PM by Kevin Berard