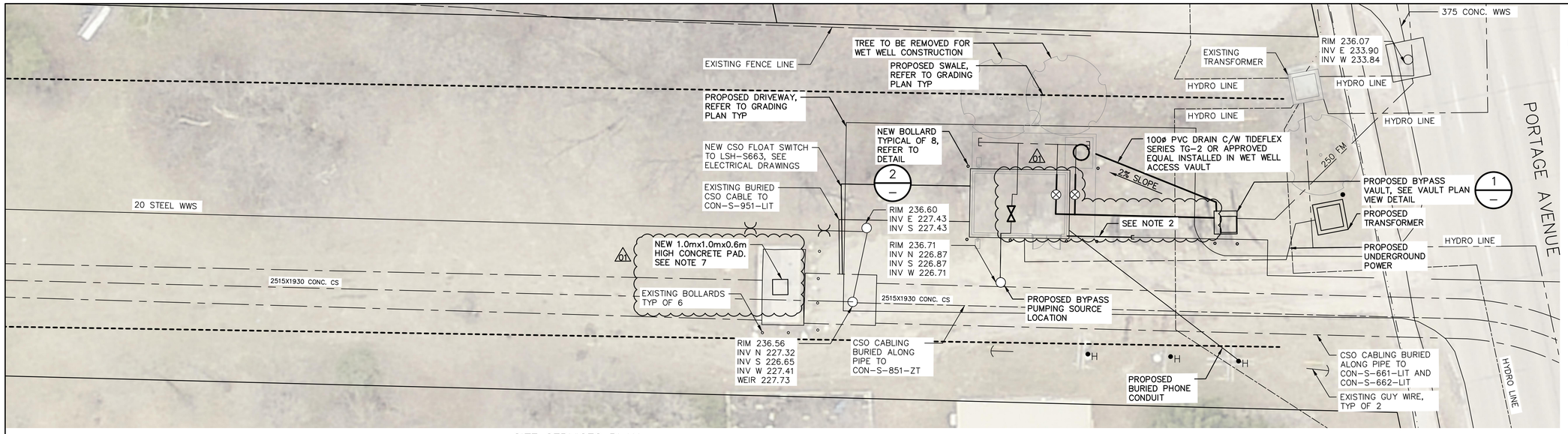

SITE SERVICES PLAN
SCALE: 1:150

GENERAL NOTES:

1. CONFIRM LOCATIONS, SIZE, TYPE, AND ELEVATIONS OF EXISTING UTILITY TIE-INS, CROSSINGS, AND PROXIMITY PRIOR TO CONSTRUCTION.
2. 20 WATER SUPPLY TO BE REPLACED FROM CURBSTOP/150 WATERMAIN TO LIFT STATION. SEAL PENETRATION THROUGH EXISTING PIPE SLEEVE W/ SIKAFLEX 1A.
3. CONTRACTOR TO EXPOSE EXISTING UTILITY LINES BY HYDROVAC EXCAVATION AND CONFIRM ELEVATIONS.
4. CONTRACTOR TO CONFIRM LOCATION AND TIE IN OF SWALES PRIOR TO CONSTRUCTION.
5. APPLY VOLCLAY WATERSTOPS IN ACCORDANCE WITH MANUFACTURER'S INSTRUCTIONS.
6. CONTRACTOR TO EXPOSE FORCE MAIN AND VERIFY FORCE MAIN ELEVATION AT THE LOCATION OF THE BYPASS VAULT PRIOR TO ORDERING THE PRECAST VAULT.
7. NEW PAD FOR OPERATOR ACCESS TO GATE CHAMBER RISING STEM ACTUATOR NUT. SEE S0006-001 DETAIL O. (01)

TEMPORARY BYPASS PUMPING NOTES:

1. BYPASS VAULT TO BE INSTALLED IN DRY WEATHER OUTSIDE OF THE SPRING RUNOFF SEASON. VAULT IS TO BE INSTALLED BETWEEN THE HOURS OF 1:00 AM AND 5:00 AM TO MAXIMIZE WET WELL STORAGE TIME.
2. DURING THE INSTALLATION OF THE BYPASS VAULT, THE CSO GATES ARE TO BE CLOSED. CONTRACTOR TO CONSTRUCT A SANDBAG WEIR IN THE GATE STRUCTURE DOWNSTREAM OF THE GATES TO CONTAIN SEEPAGE THROUGH THE GATES. SEEPAGE CONTAINED BY THE SANDBAG WEIR IS TO BE REMOVED BY VACUUM TRUCK OR SUBMERSIBLE PUMPS. NO DISCHARGE TO THE RIVER IS PERMITTED DURING THIS OPERATION.
3. CONTRACTOR TO CREATE A BYPASS PUMPING SUMP IN THE SEWER USING A SANDBAG WEIR AND BY CLOSING THE GATE VALVE IN THE COMMINUTOR CHAMBER. SEE PLAN FOR PROPOSED LOCATION. SEE NOTE 5 FOR PUMP DETAILS. PUMPING IS TO DISCHARGE TO THE BYPASS VAULT FORCE MAIN CONNECTION.
4. FOLLOWING INSTALLATION OF THE BYPASS VAULT AND SOURCE SUMP, CONTRACTOR TO PROVIDE TEMPORARY BYPASS PUMPING OF FLOWS THROUGHOUT THE PROJECT AS REQUIRED. CONTRACTOR TO PROVIDE BYPASS PUMPING PLAN AND ONSITE SEWAGE SYSTEM TO CONTRACT ADMINISTRATOR FOR REVIEW A MINIMUM OF TWO (2) WEEKS PRIOR TO COMMENCEMENT OF ANY WORK.
5. FOR TEMPORARY BYPASS PUMPING, TWO (2) ELECTRIC PUMPS SHALL BE PROVIDED WITH ONLY ONE (1) PUMPS EVER NEEDED TO RUN. EACH BYPASS PUMP SHALL PROVIDE 70-80 L/S AT A TOTAL DYNAMIC HEAD TO BE DETERMINED BY THE BYPASS PUMPING SYSTEM DESIGNER.
6. PUMPS MAY BE SUBMERSIBLE WITHIN THE SEWER OR SELF-PRIMING. A PLATFORM MAY BE EXCAVATED AND THE MANHOLE DISASSEMBLED AS NEEDED TO ACHIEVE ACCEPTABLE STATIC LIFT FOR SELF-PRIMING PUMPS.
7. TEMPORARY FITTINGS, WEIRS, PUMPS, OR APPURTENANCES INSTALLED TO SUPPORT INITIAL BYPASS PUMPING OPERATIONS SHALL BE REMOVED UPON THE INITIATION OF THE PERMANENT BYPASS PUMPING STRATEGY FROM THE MANHOLE TO THE BYPASS VAULT.
8. CONTRACTOR TO PROVIDE FULL-TIME AVAILABILITY TO ADDRESS, MINIMIZE, AND MITIGATE INTERRUPTIONS IN BYPASS PUMPING.
9. A BACKUP GENERATOR SUITABLE FOR POWERING ANY ONE OF THE BACKUP PUMPS, ALONG WITH TEMPORARY RTU PANEL AND CSO PANEL, MUST BE ONSITE AT ALL TIMES DURING BYPASS PUMPING OPERATIONS.

THE INFORMATION CONTAINED IN THESE DRAWINGS SHALL BE ORIENTED IN THE SAME DATUM AS THE GIS, NAD 1983 JUNE 1990.

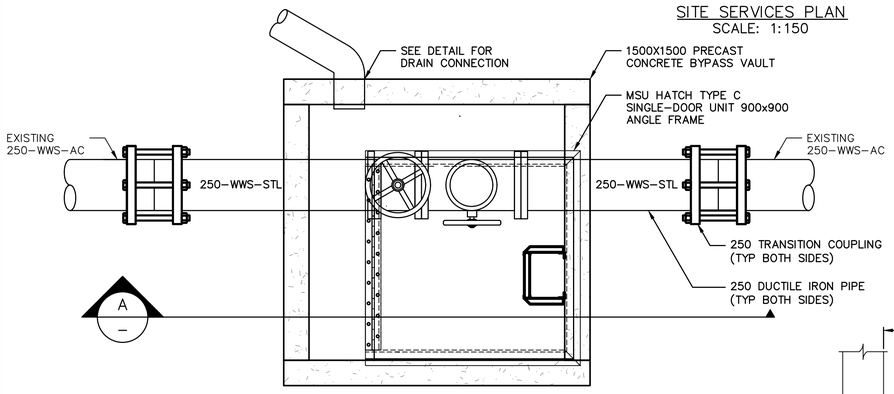

1 VAULT PLAN VIEW
SCALE: 1:15

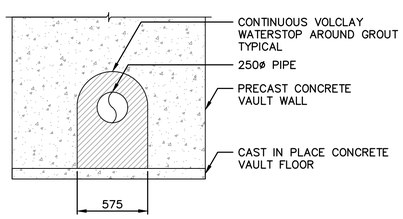

3 PIPE PENETRATION THROUGH PRECAST VAULT
SCALE: 1:25

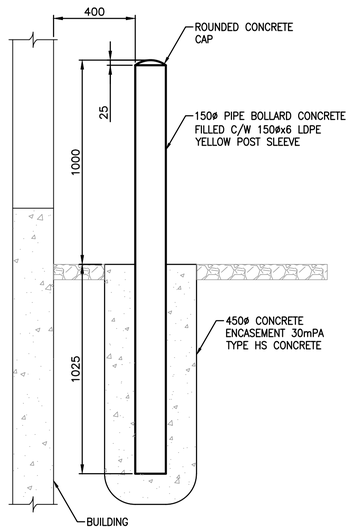

2 TYPICAL BOLLARD DETAIL
SCALE: 1:15

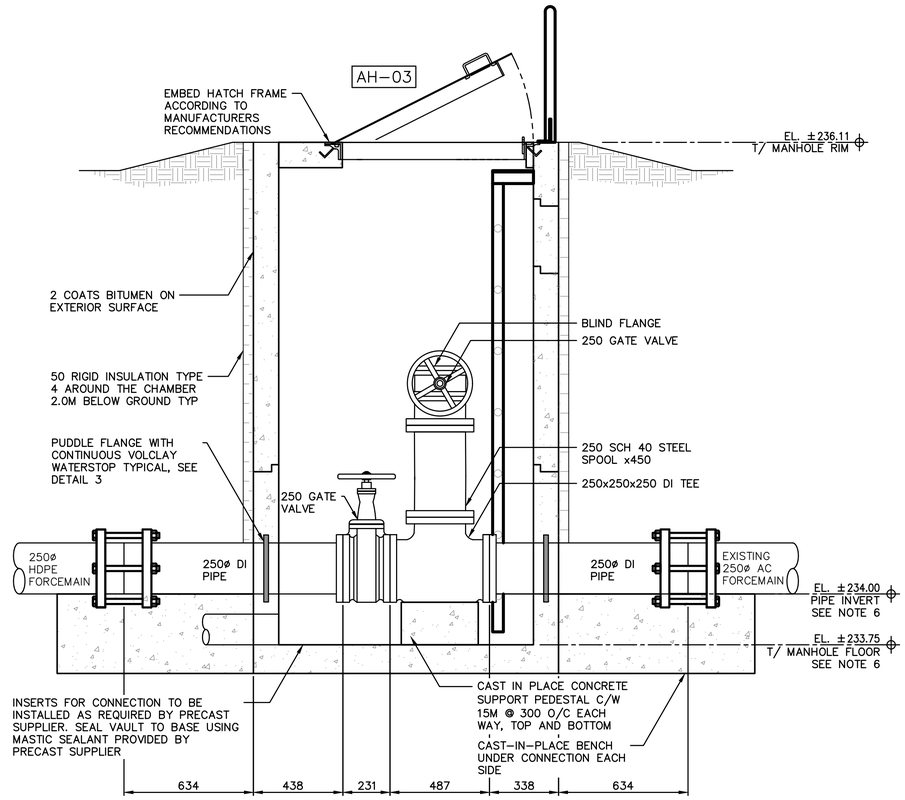

A SECTION
SCALE: 1:15

NO.	DRAWING NUMBER	REFERENCE DRAWING TITLE
10		
9		
8		
7		
6		
5		
4		
3		
2		
1		

REFERENCE DRAWINGS

0 3000 6000 9000 12000 15000
SCALE: 1:150

0 300 600 900 1200 1500
SCALE: 1:15

METRIC
WHOLE NUMBERS INDICATE MILLIMETRES
DECIMALIZED NUMBERS INDICATE METRES
UNLESS OTHERWISE NOTED

ENGINEERS GEOSCIENTISTS MANITOBA
Certificate of Authorization
MPE, a division of Englobe Corp.
No. 4968 Date: APRIL 17, 2024

B.M.
ELEV.

NO.	REVISIONS	DATE	BY
1	ADDENDUM 01, RE-ISSUED FOR CONSTRUCTION	2024-04-17	
0	ISSUED FOR CONSTRUCTION	2024-03-22	

MPE a division of Englobe

DESIGNED BY	M. BAKER	CHECKED BY	
DRAWN BY	D. MCMILLAN	APPROVED BY	
SCALE: HORIZONTAL	1:150	RELEASED FOR CONSTRUCTION	
VERTICAL			
DATE	2024-03-19	DATE	

PLOT DATE: 2024 04 17

PROVINCE OF MANITOBA
M.J. BAKER
Member 43540
REGISTERED PROFESSIONAL ENGINEER
APRIL 17, 2024
CONSULTANT DRAWING NUMBER

BID OPPORTUNITY: --

Winnipeg

THE CITY OF WINNIPEG
WATER AND WASTE DEPARTMENT
ENGINEERING DIVISION

CONWAY LIFT PUMPING STATION
2024 UPGRADES
CIVIL
SITE SERVICES PLAN AND BYPASS DETAILS

CITY DRAWING NUMBER 1-0131L-C0001-001-01 SHEET 4 OF 102

FILE PATH: M:\N-Data\84\00 City of Winnipeg\005 - Conway Lift Station\Autodesk\C3D\
FILE NAME: C1.1 Site Plan_ADD01.dwg