NOTES:

1. IN LOCAL REDUNDANT MODE, BOTH LEVEL CONTROLLERS ARE ACTIVE. LIC-L100-2 IS TO HAVE HIGHER OFFSET LEVEL TO ALLOW FOR REDUNDANCY WHILE IN LOCAL MODE. INTENT IS TO HAVE LIC-L100-1 DRIVE PUMP OPERATION WITH LIC-L100-2 AS A HARDWIRED BACKUP.
2. SWITCH TO BE CLOSED WHILE LOCAL REDUNDANT MODE IS SELECTED AND OPEN IN OTHER STATES.
3. SWITCH TO BE CLOSED WHILE LIC-L100-1 AND REDUNDANT MODES ARE SELECTED

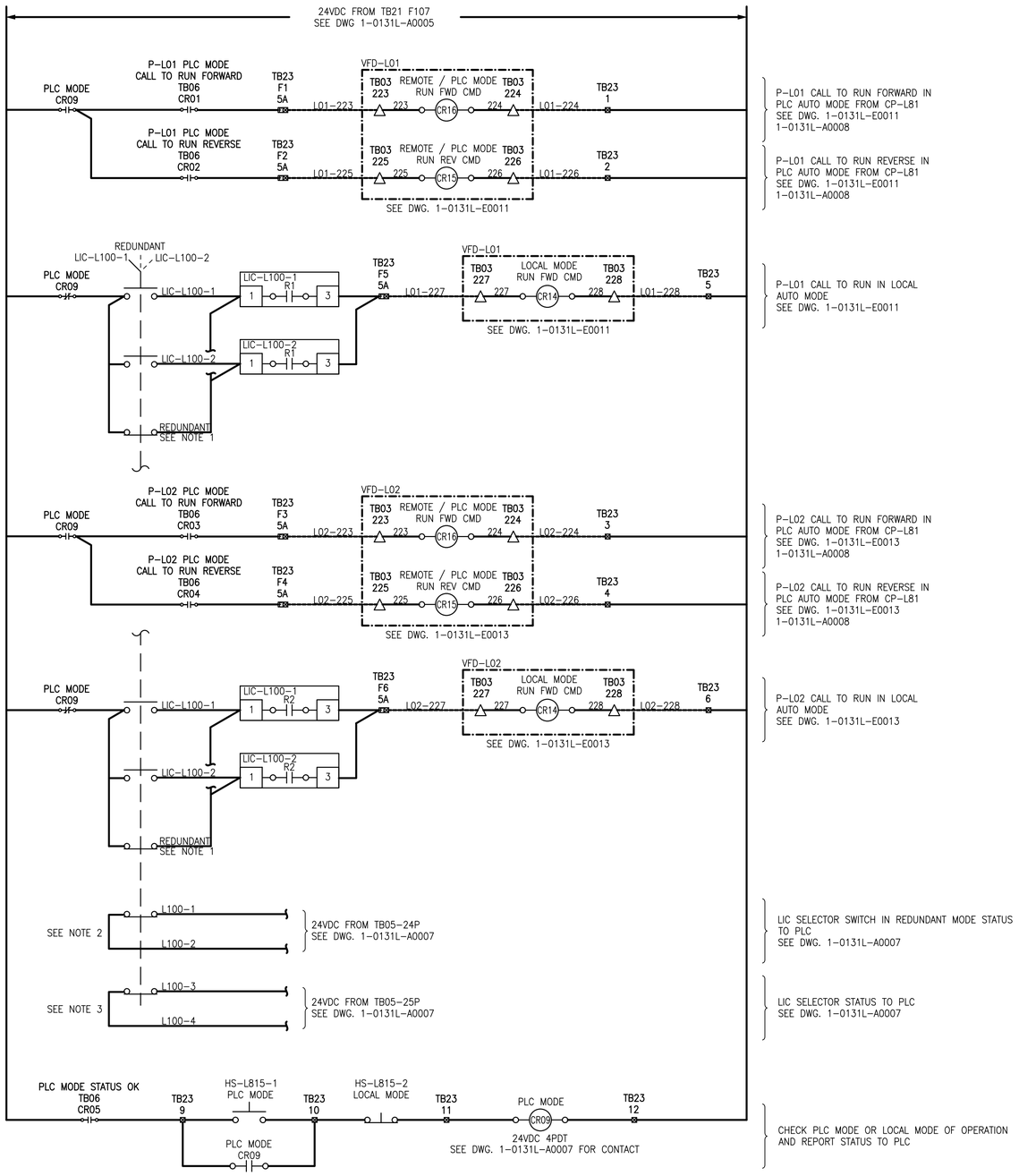

NO.	DRAWING NUMBER	REFERENCE DRAWING TITLE
10		
9		
8		
7		
6	1-0131L-A0002	AUTOMATION PLAN
5	1-0131L-A0003	PANEL LAYOUT AND BILL OF MATERIALS - PLC CONTROL PANEL CP-L81
4	1-0131L-A0007	PLC I/O WIRING - DISCRETE INPUT - RACK 0, MODULE 5
3	1-0131L-A0008	PLC I/O WIRING - DISCRETE OUTPUT - RACK 0, MODULE 6
2	1-0131L-E0011	MOTOR STARTER SCHEMATIC - LIFT PUMP P-L01
1	1-0131L-E0013	MOTOR STARTER SCHEMATIC - LIFT PUMP P-L02

REFERENCE DRAWINGS

ENGINEERS GEOSCIENTISTS MANITOBA
Certificate of Authorization
MPE, a division of Englobe Corp.
No. 4968 Date: MAR 19, 2024

B.M.
ELEV.

NO.	REVISIONS	DATE	BY
0	ISSUED FOR CONSTRUCTION	2024-03-19	

MPE a division of Englobe

DESIGNED BY	J. SWAIN	CHECKED BY	R. OFSTIE
DRAWN BY	J. SWAIN	APPROVED BY	R. OFSTIE
SCALE: HORIZONTAL VERTICAL	NTS	RELEASED FOR CONSTRUCTION	
DATE	2024-03-19	DATE	

PLOT DATE: 2024 03 19

PROVINCE OF MANITOBA R.G OFSTIE Member 44405 REGISTERED PROFESSIONAL ENGINEER
MARCH 21, 2024
CONSULTANT DRAWING NUMBER

BID OPPORTUNITY: --

Winnipeg

THE CITY OF WINNIPEG
WATER AND WASTE DEPARTMENT
ENGINEERING DIVISION

CONWAY LIFT PUMPING STATION
2024 UPGRADES

AUTOMATIC PUMP CONTROL WIRING SCHEMATIC

PLC CONTROL PANEL CP-L81
LOCAL MODE AND PLC MODE OF OPERATION

CITY DRAWING NUMBER 1-0131L-A0014-001-00 SHEET 70 OF 102

FILE PATH: M:\N-Data\B4\00 City of Winnipeg\005 - Conway Lift Station\Autodesk\ACAD\
FILE NAME: A1.8 AUTOMATIC PUMP CONTROL WIRING SCHEMATIC .dwg