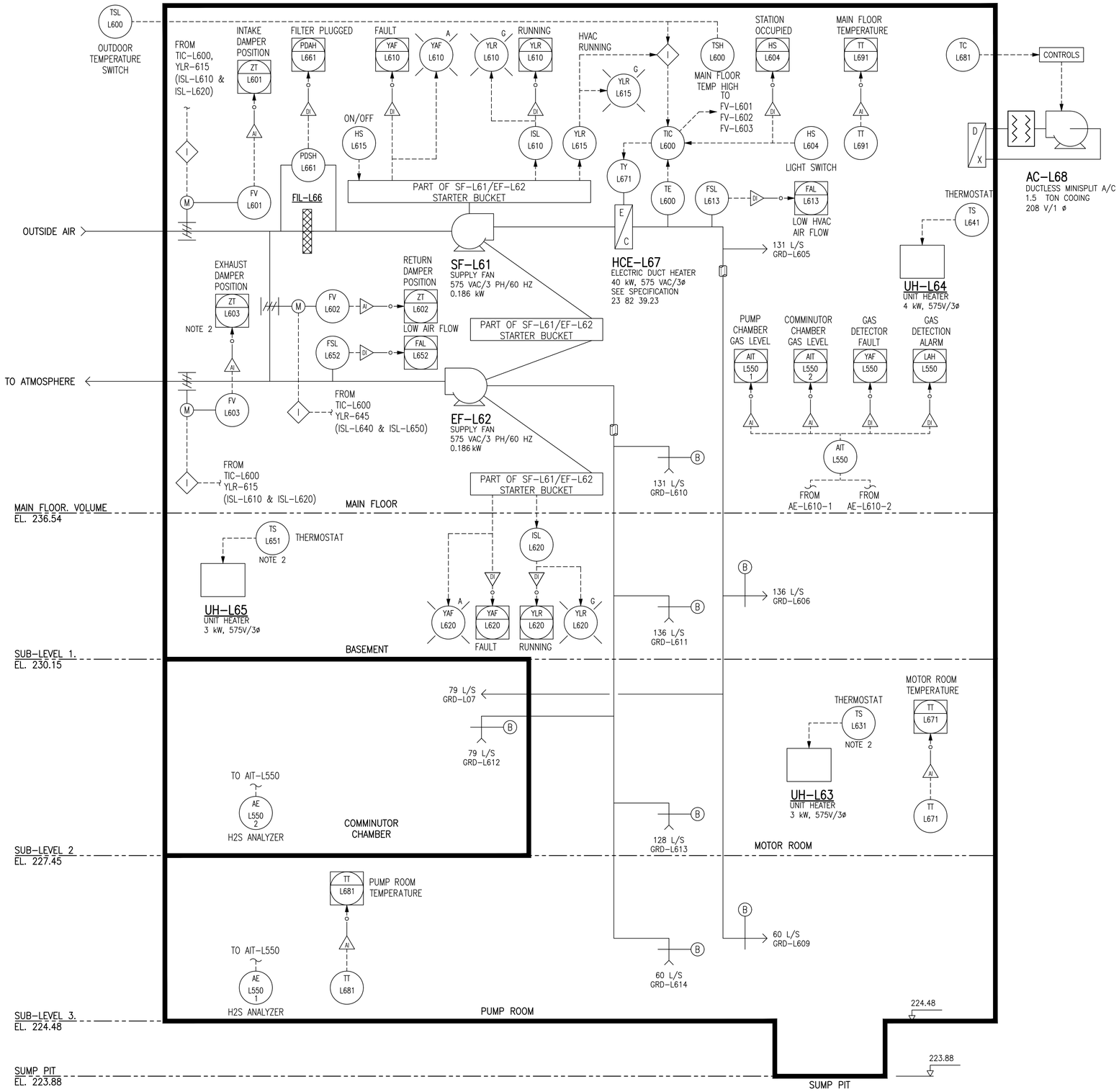

THE INFORMATION CONTAINED IN THESE DRAWINGS SHALL BE ORIENTED IN THE SAME DATUM AS THE GIS, NAD 1983 JUNE 1990.

NO.	DRAWING NUMBER	REFERENCE DRAWING TITLE
10		
9		
8		
7		
6		
5		
4		
3		
2	1-0131L-P0003-001-00	WASTEWATER LIFT PUMPING
1	1-0131L-P0002-001-00	WET WELL, SUMP, AND LEVEL TRANSMITTERS

REFERENCE DRAWINGS

NOTES:

1. THE CONTRACTOR SHALL VISIT THE SITE AND SATISFY ONESELF ALL DIMENSIONS, DATUM, AND DETAILED INFORMATION ARE CORRECT.
2. EQUIPMENT VENDOR SUPPLIED. CONTROLS CONTRACTOR SHALL INSTALL AND PROVIDE WIRING TO LOCATION WITHIN THE FIELD.

ENGINEERS GEOSCIENTISTS MANITOBA
Certificate of Authorization
MPE, a division of Englobe Corp.
No. 4968 Date: MAR 22, 2024

B.M.
ELEV.

NO.	REVISIONS	DATE	BY
0	ISSUED FOR CONSTRUCTION	2024-03-22	

MPE a division of Englobe

DESIGNED BY	P. NAYAK	CHECKED BY	
DRAWN BY	D. MCMILLAN	APPROVED BY	
SCALE: HORIZONTAL / VERTICAL	NOT TO SCALE	RELEASED FOR CONSTRUCTION	
DATE	2024-03-19	DATE	

PLOT DATE: 2024 03 22

PROVINCE OF MANITOBA P.P. GOERTZEN Member 43822 REGISTERED PROFESSIONAL ENGINEER

MARCH 22, 2024
CONSULTANT DRAWING NUMBER

BID OPPORTUNITY: --

Winnipeg

THE CITY OF WINNIPEG
WATER AND WASTE DEPARTMENT
ENGINEERING DIVISION

CONWAY LIFT PUMPING STATION
2024 UPGRADES

PROCESS AND INSTRUMENTATION DIAGRAM

HVAC VENTILATION AND MISCELLANEOUS

CITY DRAWING NUMBER 1-0131L-P0004-001-00 SHEET 29 OF 102

FILE PATH: M:\N-Data\84\00 City of Winnipeg\005 - Conway Lift Station\Autodesk\ACAD\
FILE NAME: P1.1-P1.3 P&ID.dwg