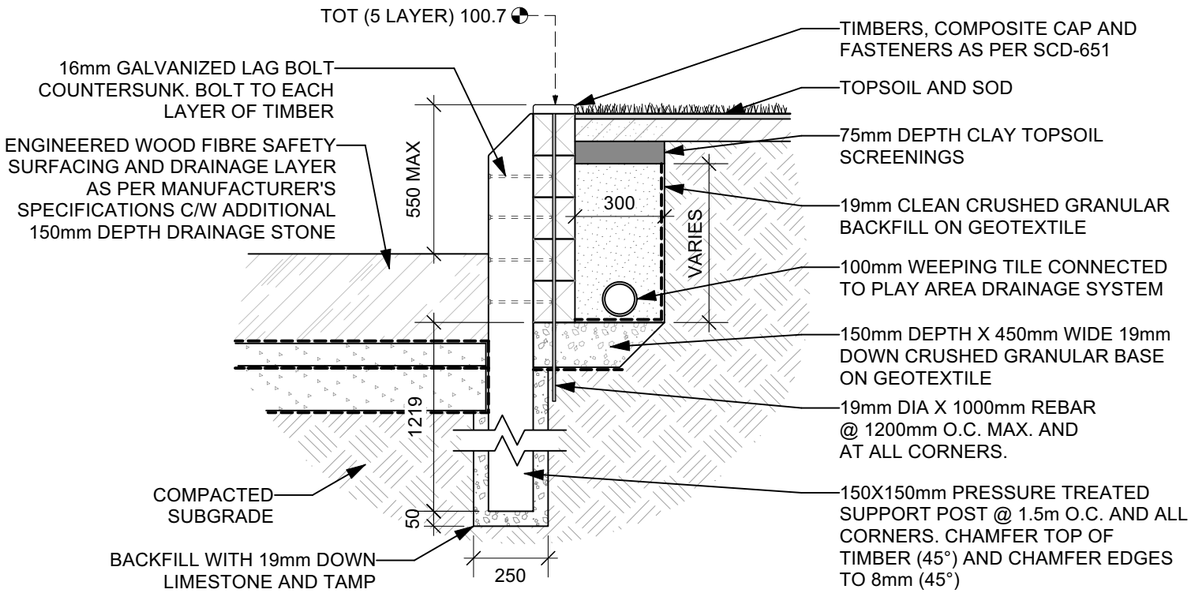

1 REINFORCED TIMBER RETAINING WALL
Scale: 1:20

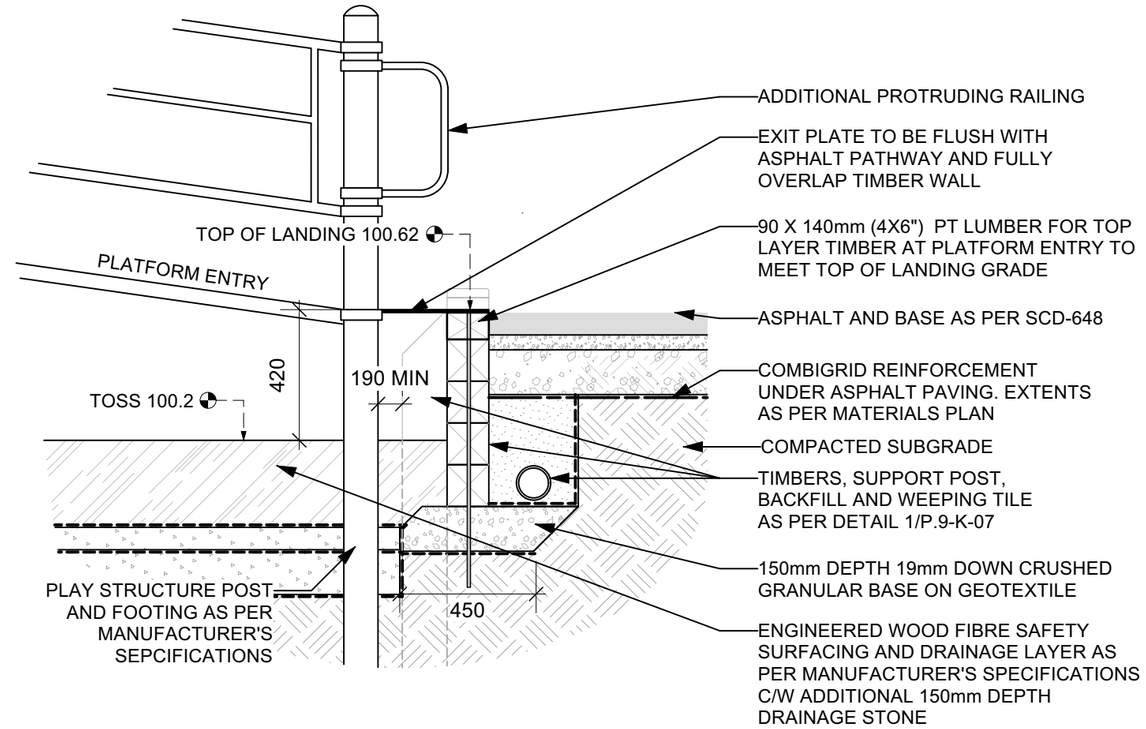

2 ACCESSIBLE ELEVATED PLATFORM ENTRY - SECTION
Scale: 1:20

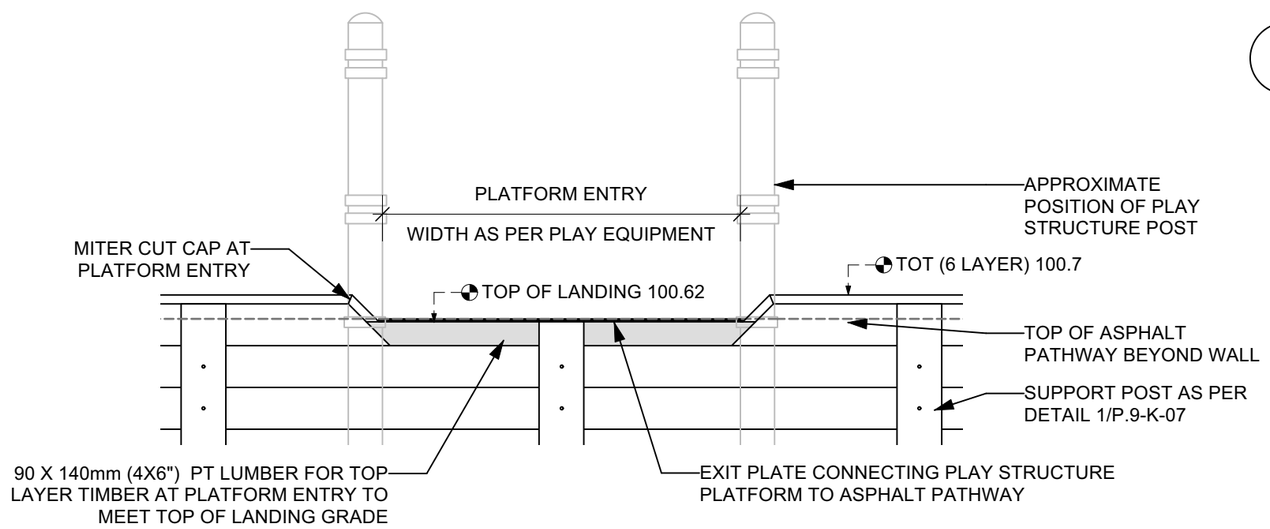

3 ACCESSIBLE ELEVATED PLATFORM ENTRY - ELEVATION
Scale: 1:20

GENERAL NOTES

1. ALL WORK TO CONFORM TO CURRENT CITY OF WINNIPEG STANDARD CONSTRUCTION SPECIFICATIONS AND DETAILS UNLESS OTHERWISE NOTED.
2. DIMENSIONS ARE IN MILLIMETERS UNLESS OTHERWISE NOTED.
3. DO NOT SCALE DRAWINGS.

CONTRACTOR TO CONFIRM ALL DIMENSIONS AND REPORT ANY DISCREPANCIES TO CONTRACT ADMINISTRATOR PRIOR TO CONSTRUCTION. LOCATION OF UNDERGROUND STRUCTURES AS SHOWN ARE BASED ON THE BEST INFORMATION AVAILABLE BUT NO GUARANTEE IS GIVEN THAT ALL EXISTING UTILITIES ARE SHOWN OR THAT THE GIVEN LOCATIONS ARE EXACT. CONFIRMATION OF EXISTENCE AND EXACT LOCATION OF ALL SERVICES MUST BE OBTAINED FROM THE INDIVIDUAL UTILITIES BEFORE PROCEEDING WITH CONSTRUCTION.

Winnipeg
THE CITY OF WINNIPEG
Planning, Property and Development Department
Planning and Land Use Division
Unit 15 - 30 Fort Street, Winnipeg, MB, (R3C 4X5)

DESIGNED BY		CHECKED BY	
DRAWN BY	TB	APPROVED BY	
HORIZ. SCALE / VERT. SCALE	1:600		
DATE	MARCH 2024		

MANAGER, PARK AND OPEN SPACES — DATE

MANAGER, PLANNING AND LAND USE DIVISION — DATE

DRAWING TITLE
PACIFIC JUNCTION PLAYGROUND REDEVELOPMENT
DETAILS

SITE ADDRESS
685 CATHCART STREET

DRAWING NO.
P.9-K-08

BID OPPORTUNITY NO.
190-2024