MCC–R740 REQUIREMENTS:

IDENTIFIER: MCC–R740		
ENCLOSURE TYPE: NEMA 3R	MOUNTING: FRONT	DEPTH: 508mm
SUPPLY VOLTAGE: 600V, 3ø, 3W, 60 Hz		INCOMING NEUTRAL TERMINATION: NO
CONTROL VOLTAGE: 120V, 60 Hz	WIRING: CLASS I, TYPE Bd OR Bt AS SHOWN ON THE DRAWINGS	
MINIMUM BUS RATING:	HORIZONTAL: 400A	VERTICAL: AS REQ'D
SUITABLE FOR SERVICE ENTRANCE: NO		NEUTRAL BUS: NO
BUS BRACING: 42kA	SCCR: 25 kA	SERIES SCCR PERMITTED: NO
BUS MATERIAL: TIN PLATED COPPER		
MANUFACTURER: SCHNEIDER ELECTRIC		MODEL: MODEL 6 – SMART MCC

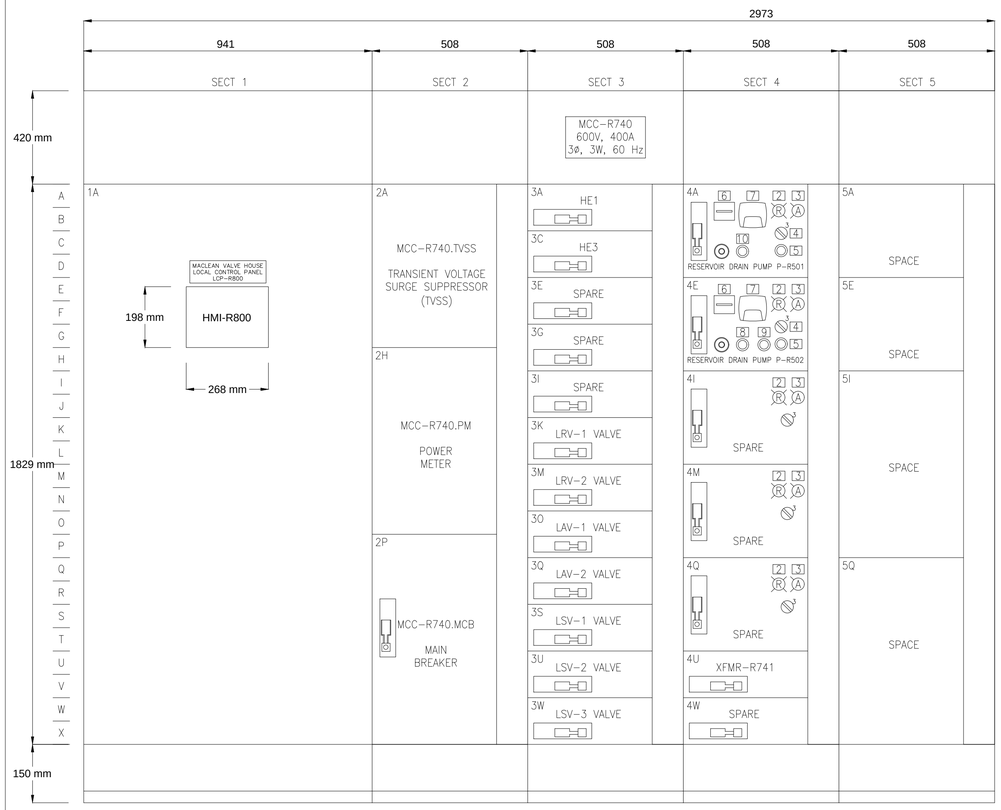

MCC-R740 ELEVATION DETAIL

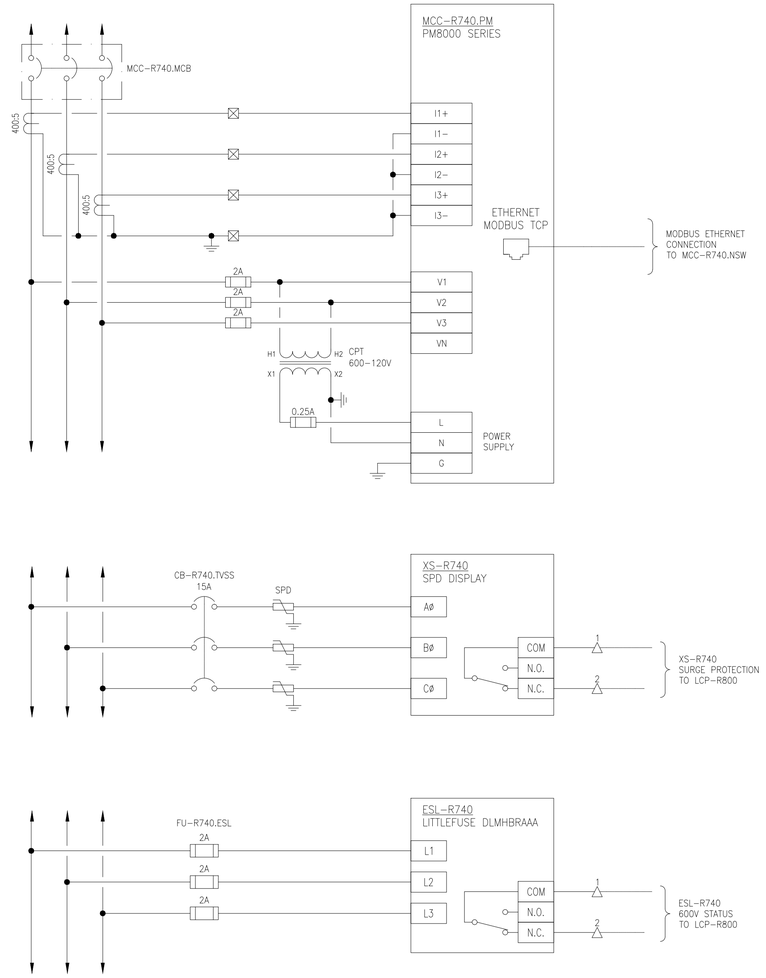

MCC PROTECTION WIRING DIAGRAMS

SUGGESTED PHASING:

THE FOLLOWING PHASING PLAN IS A SUMMARY OF THE WORK TO BE CARRIED OUT. CONTRACTOR TO CREATE THEIR OWN SCHEDULE/PHASE PLAN BASED ON MINIMUM DISTURBANCE TO WATER DISTRIBUTION OPERATIONS AND PROJECT REQUIREMENTS. REFER TO SPECIFICATIONS FOR ALLOWABLE SHUTDOWN DURATIONS AND COORDINATION REQUIREMENTS.

THE ELECTRICAL CONTRACTOR IS RESPONSIBLE FOR PROVIDING TEMPORARY POWER GENERATOR SERVICES CONNECTIONS, TEMPORARY POWER DISTRIBUTION, AND ALL EQUIPMENT AND FUEL REQUIRED FOR MINIMUM DOWN TIME OF EQUIPMENT. REFER TO SPECIFICATION FOR REQUIREMENTS.

CONTRACTOR ALSO RESPONSIBLE FOR VERIFYING PHASE ROTATION OF ALL EQUIPMENT WHERE NEW POWER FEEDERS WERE RUN, OR EXISTING POWER FEEDERS WERE RECONNECTED. CONTRACTOR TO IDENTIFY BEFORE CONSTRUCTION CURRENT ROTATION OF ALL MOTORS, AND VALVE ACTUATORS. CONTRACTOR TO CONFIRM ROTATION AFTER ALL CONSTRUCTION IS COMPLETE. PHASE ROTATION TO BE WITNESSED BY THE CITY AND THE CONTRACT ADMINISTRATOR REPRESENTATIVES. PROVIDE THREE BUSINESS DAYS NOTICE OF TESTING.

PHASE 1 (PREPARATION AND FIRST ROUND OF SHUT DOWNS):

1. ELECTRICAL CONTRACTOR TO COORDINATE WITH THE CITY WATER SERVICES AND WITH THE CONTRACT ADMINISTRATOR TO PLAN FOR SHUTDOWNS AND TEMPORARY POWER INSTALLATIONS. PROVIDE TEMPORARY POWER FOR ENTIRE BUILDING, AND ALL CRITICAL EQUIPMENT.
2. ELECTRICAL CONTRACTOR TO SUPPLY AND INSTALL NEW PLC PANEL, 'LCP–R800' IN MCC SECTION 1. PLC PANEL SECTION TO BE USED SEPERATLY FOR TEMPORARY CONTROL, AND ATTACHED DURING FINAL INSTALL.
3. ELECTRICAL CONTRACTOR TO SUPPLY AND INSTALL NEW FIBRE CABLE IN EXISTING UNDERGROUND 103mm CONDUIT. FIBRE CABLE TO RUN FROM NEW PLC PANEL 'LCP–R800' FIBRE PATCH SWITCH TO NEW TEMPORARY NETWORK SWITCH. NEW PLC PANEL, 'LCP–R800' TO BE OPERATIONAL PRIOR TO CONTROL CABLING SHUT DOWNS. ALL NETWORK CABLING TIE–INS TO BE COMPLETED WITH THE CITY REPRESENTATIVE PRESENT.
4. ONCE PLC PANEL, 'LCP–R800' IS OPERATIONAL AND TEMPORARY POWER SERVICES ARE OPERATIONAL, CONTRACTOR TO BE BEGIN SHUTDOWNS (ONE BY ONE) TO DISCONNECT POWER AND CONTROLS FROM EXISTING SERVICES AND RE–CONNECT TO TEMPORARY POWER AND NEW PLC PANEL, 'LCP–R800'. CONTRACTOR TO COORDINATE THIS WORK WITH CITY TO LIMIT DOWNTIME OF THE SYSTEM. EXISTING POWER FEEDERS AND CONTROL WIRING EXTERNAL TO THE VALVE HOUSE TO REMAIN IN PLACE AND BE RE–USED ONCE NEW MCC IS OPERATIONAL. ALL OTHER POWER AND CONTROL WIRING WITHIN THE VALVE HOUSE TO BE NEW.
5. ONCE ALL EQUIPMENT IS POWERED FROM TEMPORARY POWER SERVICES AND CONTROLLED FROM NEW PLC PANEL, 'LCP–R800', CONTRACTOR TO BEGIN DEMOLITION OF EXISTING MCC AND TERMINAL CABINET.

PHASE 2 (NEW MCC AND SECOND ROUND OF SHUT DOWNS):

1. ONCE EXISTING MCC AND TERMINAL CABINET HAVE BEEN REMOVED, SUPPLY AND INSTALL NEW MCC.
2. PLC PANEL 'LCP–R800' TO BE PERMANENTLY ATTACHED TO THE NEW MCC.
3. WIRE NEW AND EXISTING POWER FEEDERS INTO NEW MCC AND TERMINATE CABLES. ONCE EXISTING FEEDERS HAVE BEEN TERMINATED IN MCC, CONTRACTOR TO BEGIN SHUT DOWNS OF EQUIPMENT TO TRANSFER POWER BACK ONTO BUILDING POWER SUPPLY.

PHASE 3 (TESTING AND COMMISSIONING):

1. UPON COMPLETION OF WORK AND IN COORDINATION WITH CITY, EXISTING SERVICES ARE TO BE TESTED TO ENSURE CORRECT OPERATION.

MCC SCHEDULE

BUCKET	EQUIPMENT TAG	DESCRIPTION	VOLTAGE (V)	POWER	AMPERAGE (A)	CIRCUIT BREAKER	WIRE
1A	LCP–R800	PLC LOCAL CONTROL PANEL	120	–	–	15A 1P	–
2A	MCC–R740.TVSS	TRANSIENT VOLTAGE SURGE PROTECTION DEVICE AND BREAKER	600	–	–	15A 3P	–
2H	MCC–R740.PM	MCC POWER METER	600	–	–	–	–
2P	MCC–R740.MCB	MCC MAIN BREAKER	600	–	–	400A 3P	3C–3/0 AWG CU RW90
3A	HE1	UNIT HEATER	600	7.5 kW	7.3	15A 3P	3C–#12 TECK 90
3C	HE3	UNIT HEATER	600	20 kW	19.2	30A 3P	3C–#10 TECK 90
3E	SPARE	–	–	–	–	–	–
3G	SPARE	–	–	–	–	–	–
3I	SPARE	–	–	–	–	–	–
3K	LRV–1	ELECTRIC VALVE ACTUATOR	600	0.3–0.6kW	0.5–1A	15A 3P	3C–#12 TECK 90
3M	LRV–2	ELECTRIC VALVE ACTUATOR	600	0.3–0.6kW	0.5–1A	15A 3P	3C–#12 TECK 90
3O	LAV–1	ELECTRIC VALVE ACTUATOR	600	0.3–0.6kW	0.5–1A	15A 3P	3C–#12 TECK 90
3Q	LAV–2	ELECTRIC VALVE ACTUATOR	600	0.3–0.6kW	0.5–1A	15A 3P	3C–#12 TECK 90
3S	LSV–1	ELECTRIC VALVE ACTUATOR	600	0.3–0.6kW	0.5–1A	15A 3P	3C–#12 TECK 90
3U	LSV–2	ELECTRIC VALVE ACTUATOR	600	0.3–0.6kW	0.5–1A	15A 3P	3C–#12 TECK 90
3W	LSV–3	ELECTRIC VALVE ACTUATOR	600	0.3–0.6kW	0.5–1A	15A 3P	3C–#12 TECK 90
4A	P–R501	SMALL SUMP PUMP	600	5 HP	6.1	15A 3P	3C–#12 TECK 90
4E	P–R502	DRAIN PUMP	600	25 HP	27	50A 3P	3C–#10 TECK 90
4I	SPARE	–	–	–	–	–	–
4M	SPARE	–	–	–	–	–	–
4Q	SPARE	–	–	–	–	–	–
4U	XFMR–R741	DISTRIBUTION PANEL TRANSFORMER	600	30 KVA	29	40A 3P	3C–#8 TECK 90
4W	SPARE	SPARE	–	–	–	–	–
5A	SPACE	SPACE	–	–	–	–	–
5E	SPACE	SPACE	–	–	–	–	–
5I	SPACE	SPACE	–	–	–	–	–
5Q	SPACE	SPACE	–	–	–	–	–

LAMACOID SCHEDULE

LEGEND	LAMACOID ENGRAVING
1	READY
2	RUNNING
3	O/L FAULT
4	HAND OFF AUTO
5	O/L RESET
6	MOTOR RUN TIME
7	MOTOR CURRENT
8	START
9	STOP
10	RUN

LEGEND:

- DEVICE TERMINAL
- FEED THROUGH TERMINAL BLOCK
- BLUE PILOT LIGHT
- GREEN PILOT LIGHT
- RED PILOT LIGHT
- AMBER PILOT LIGHT
- 2–POSITION SWITCH
- 3–POSITION SWITCH
- 4–POSITION SWITCH
- SPEED POTENTIOMETER
- PUSH BUTTON
- EMERGENCY STOP BUTTON
- ELAPSED TIME METER
- AMMETER

DRAWING NUMBER	REFERENCE DRAWINGS
1–0630R–E0001–001	ELECTRICAL SINGLE LINE DIAGRAM RESERVOIR VALVE HOUSE
1–0630R–E0006–001	P020 RESERVOIR DRAIN PUMP MOTOR WIRING SCHEMATIC
1–0630R–E0005–001	P010 RESERVOIR DRAIN PUMP MOTOR WIRING SCHEMATIC
1–0630A–E0018–001	ELECTRICAL SITE PLAN
1–0630R–E0003–001	ELECTRICAL PLANS, LUIMINAIR, AND PANEL SCHEDULE
1–0630R–E0002–001	ELECTRICAL DEMOLITION PLANS AND LEGEND

B.M.
ELEV.

CONSTRUCTION COMPLETION DATE: YYYY MM DD

NO.	REVISIONS	DATE	BY
0	ISSUED FOR TENDER 195-2024	2024-02-29	C.L.

DILLON CONSULTING

DESIGNED BY	KS	CHECKED BY	CL
DRAWN BY	KS	APPROVED BY	BLM
SCALE: HORIZONTAL	N.T.S.	RELEASED FOR CONSTRUCTION	
VERTICAL			
DATE	2023-01-20	DATE	

PLOT DATE: 2024 02 29

ENGINEER'S SEAL

PROVINCE OF MANITOBA
C.P. LANGE
Member
37791
2024/02/29
REGISTERED PROFESSIONAL ENGINEER

CONSULTANT DRAWING NUMBER
211001

Winnipeg

THE CITY OF WINNIPEG

WATER AND WASTE DEPARTMENT
ENGINEERING DIVISION

REGIONAL WATER DISTRIBUTION SYSTEM
MACLEAN VALVE HOUSE MCC UPGRADE

MCC ELEVATION AND DETAILS

SHEET 5 OF 33

CITY DRAWING NUMBER

1-0630R-E0004-001

BID OPPORTUNITY: 195-2024
CONTRACT NUMBER: X

FILE PATH: C:\pw working directory\projects 2021\dillon_40kss\d0112514\
FILE NAME: E-5 - Details.dwg