DATE: 2024.12.18 FILE NAME: 2020-136V0.dwg\A7.1

PROJECT No: 2020-136 SHEET TITLE: PLAN DETAILS

ADDRESS: 80 SINCLAIR STREET

NOTES:

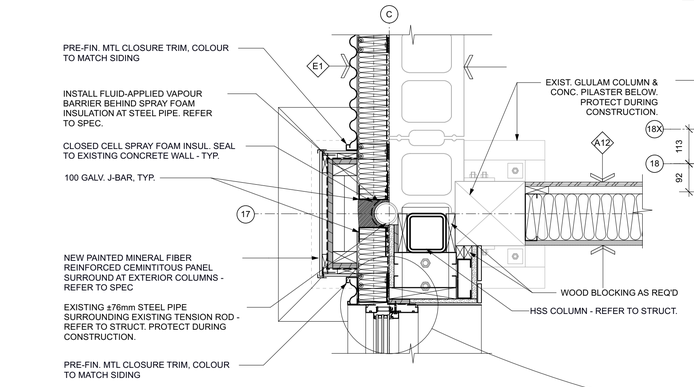

8 A7.1 PLAN DETAIL - LOBBY 101 - WINDOW JAMB
SCALE: 1:10

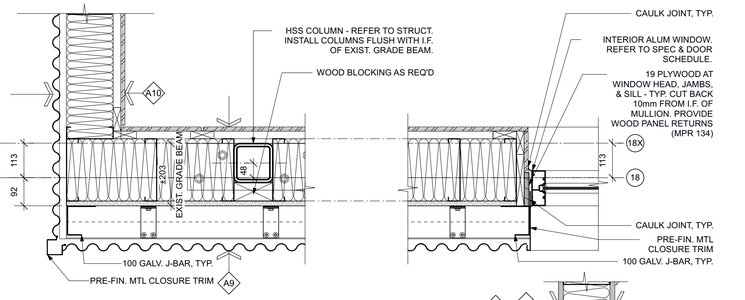

1 A7.1 PLAN DETAIL - LOBBY 101
SCALE: 1:10

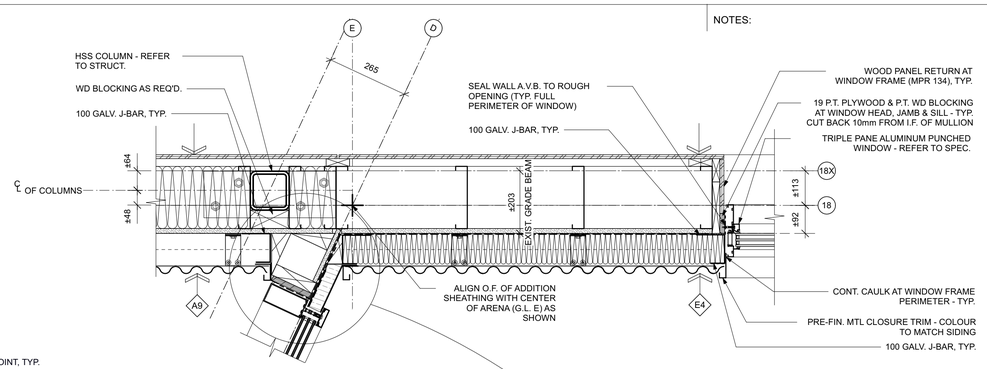

2 A7.1 PLAN DETAIL - CURTAIN WALL TO EXISTING ARENA
SCALE: 1:10

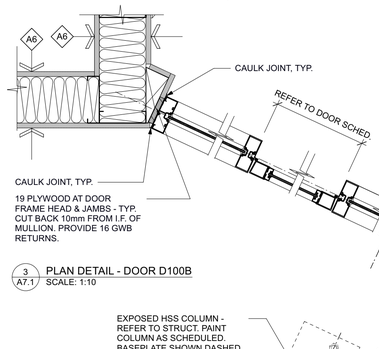

3 A7.1 PLAN DETAIL - DOOR D100B
SCALE: 1:10

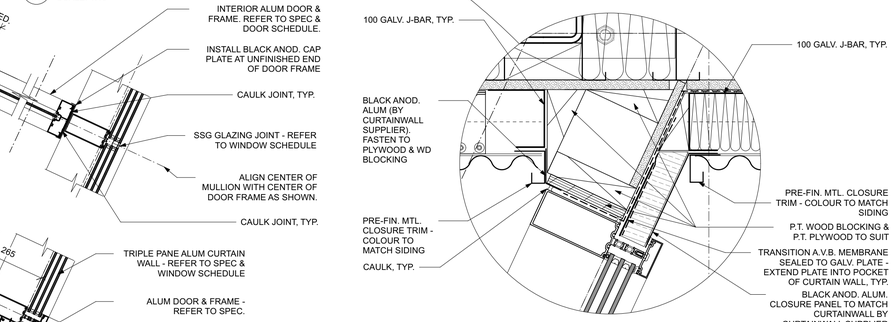

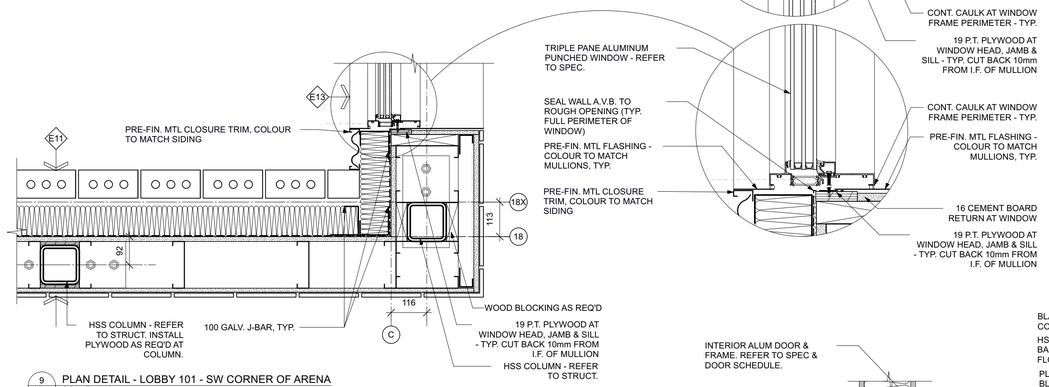

9 A7.1 PLAN DETAIL - LOBBY 101 - SW CORNER OF ARENA
SCALE: 1:10

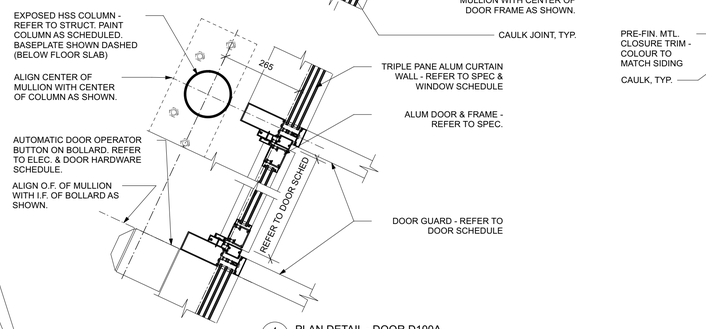

4 A7.1 PLAN DETAIL - DOOR D100A
SCALE: 1:10

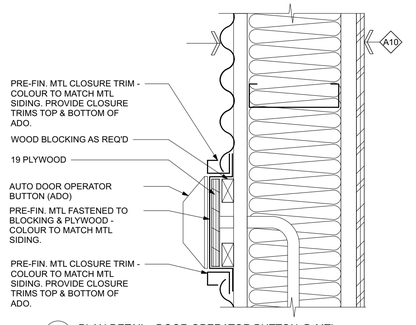

10 A7.1 PLAN DETAIL - DOOR OPERATOR BUTTON @ MTL
SCALE: 1:5

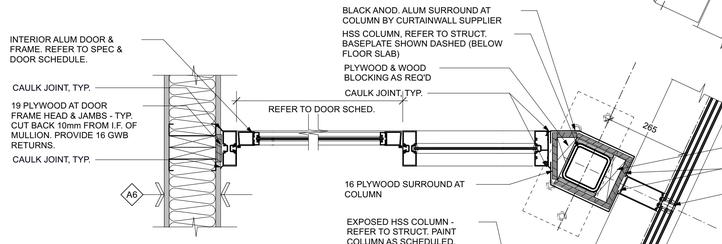

5 A7.1 PLAN DETAIL - DOOR D100C
SCALE: 1:10

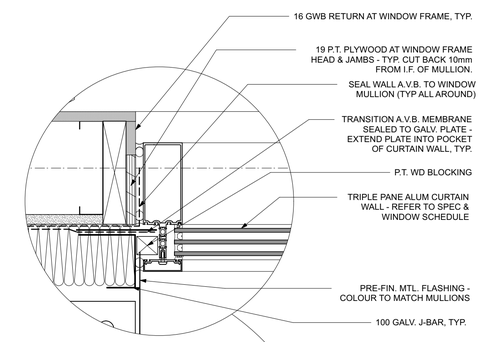

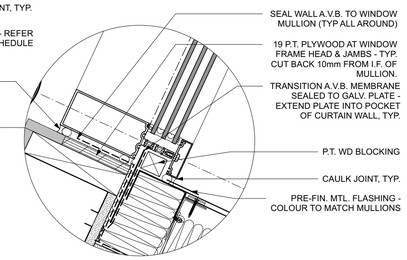

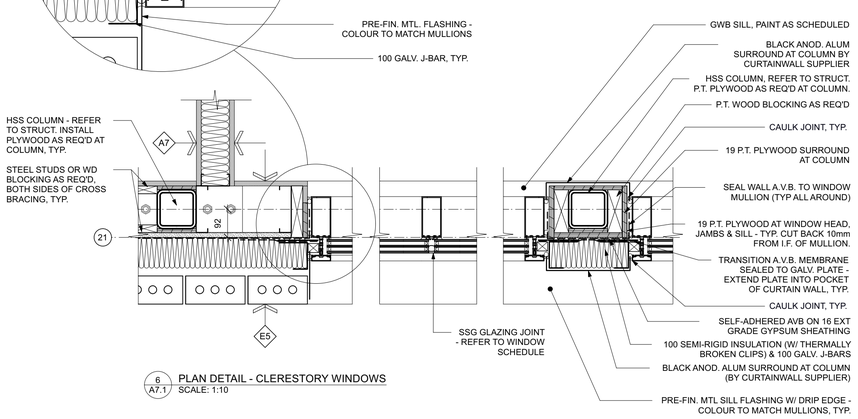

6 A7.1 PLAN DETAIL - CLERESTORY WINDOWS
SCALE: 1:10

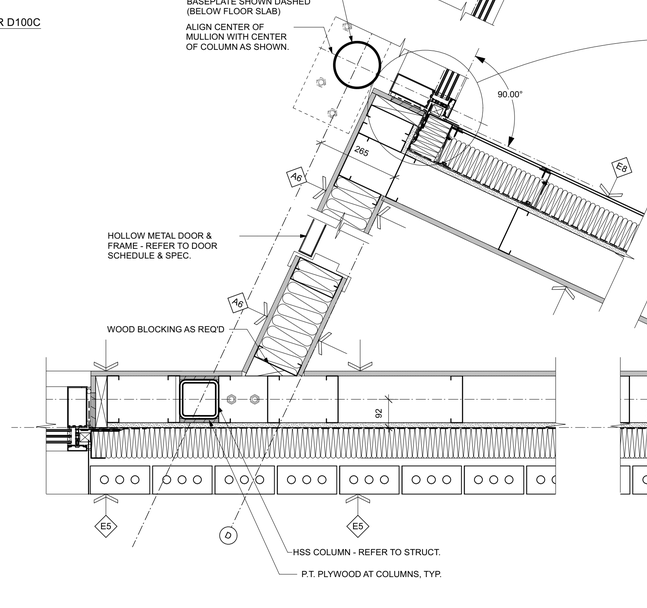

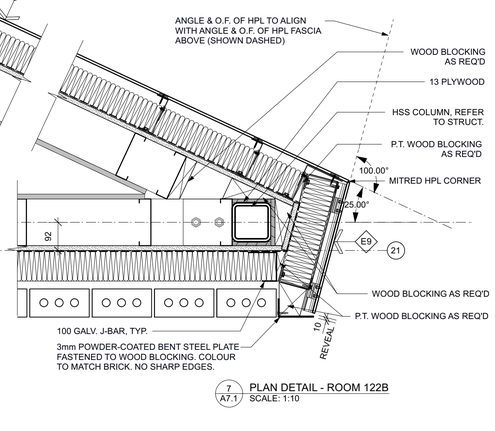

7 A7.1 PLAN DETAIL - ROOM 122B
SCALE: 1:10

| x | architecture inc.

No.	REVISION/DESCRIPTION	BY	DATE

SEAL

MAA Digital Signature Applied — PROVINCE OF MANITOBA — TRAVIS COOKE — REGISTERED ARCHITECT

MAA Digital Signature Applied — PROVINCE OF MANITOBA — 1x1 ARCHITECTURE INC. — APPROVED ARCHITECTURAL CORPORATION

DRAWN	CHECKED	DESIGNED	APPROVED
HC 2024-12-18	TC	TC/HC 2024-12-18	TC
DATE 2024.12.18	USER APPROVAL IC/AF/SS		

Winnipeg

THE CITY OF WINNIPEG
ASSETS and PROJECT MANAGEMENT DEPARTMENT
MUNICIPAL ACCOMMODATIONS DIVISION

PROJECT 3-65 GARRY STREET, R3C 4K4

REDEVELOPMENT OF THE OLD EXHIBITION ARENA ISSUED FOR CONSTRUCTION

80 SINCLAIR STREET

SHEET TITLE

PLAN DETAILS

SCALE	PROJECT No:	SHEET No:
AS SHOWN	2020-136	A7.1

DRAWING SHEET SIZE: A1 (841mm x 594mm) PLOT 1:1