DATE: 2024.12.18 FILE NAME: 2020-136V0.dwg\A7.2

PROJECT No: 2020-136 SHEET TITLE: PLAN DETAILS

ADDRESS: 80 SINCLAIR STREET

NOTES:

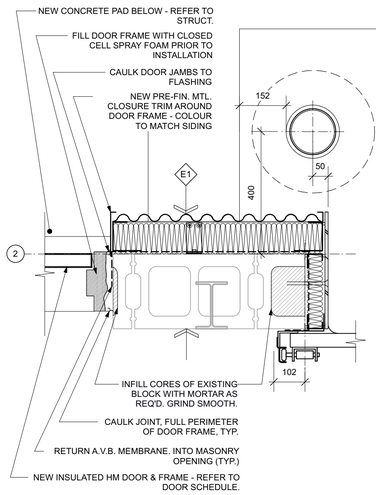

1 A7.2 PLAN DETAIL - ARENA HM DOOR JAMB
SCALE: 1:10

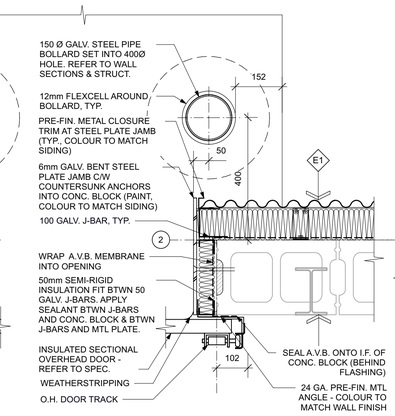

2 A7.2 PLAN DETAIL - ARENA OVERHEAD DOOR JAMB
SCALE: 1:10

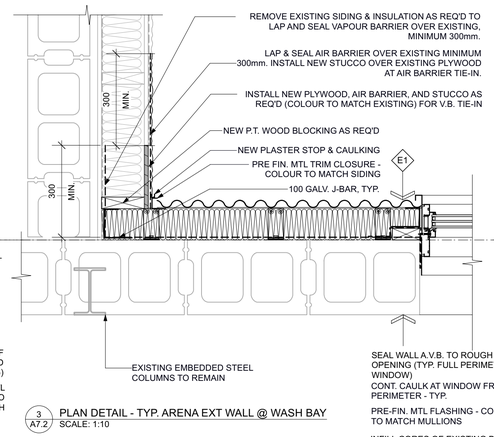

3 A7.2 PLAN DETAIL - TYP. ARENA EXT WALL @ WASH BAY
SCALE: 1:10

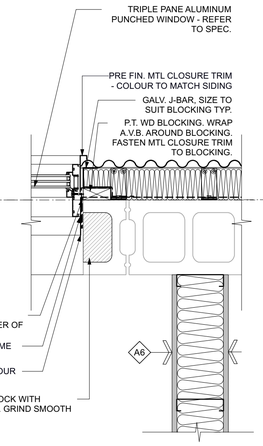

4 A7.2 PLAN DETAIL - TYP. ARENA NORTH WINDOW
SCALE: 1:10

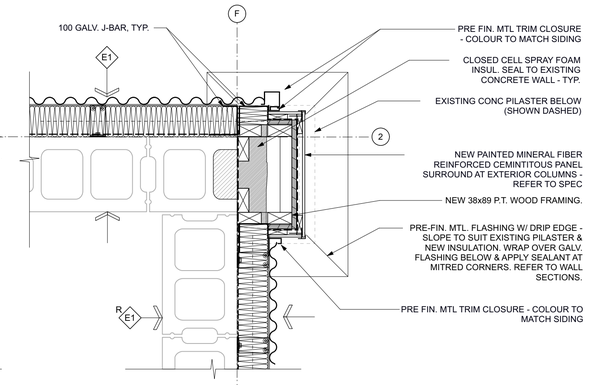

5 A7.2 PLAN DETAIL - TYP. ARENA NORTH CORNER
SCALE: 1:10

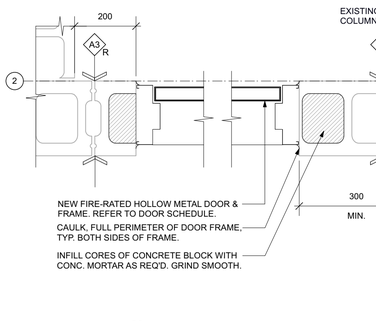

6 A7.2 PLAN DETAIL - DOOR D154A @ WASH BAY
SCALE: 1:10

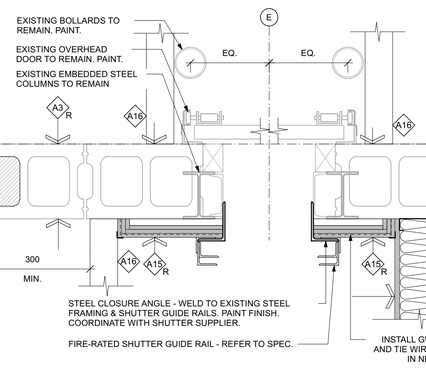

7 A7.2 PLAN DETAIL - INT. OVERHEAD DOOR @ WASH BAY
SCALE: 1:10

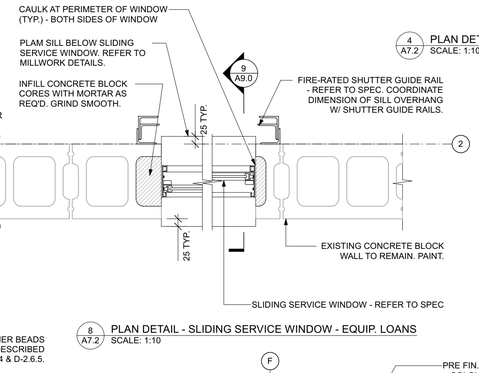

8 A7.2 PLAN DETAIL - SLIDING SERVICE WINDOW - EQUIP. LOANS
SCALE: 1:10

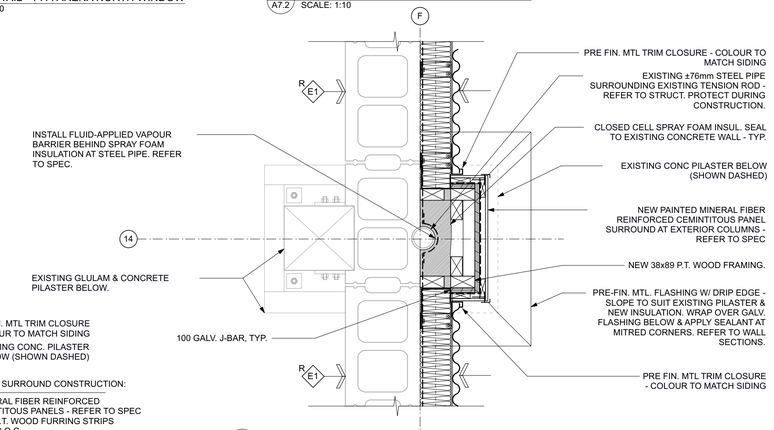

9 A7.2 PLAN DETAIL - TYP. BASE OF GLULAM/PILASTER
SCALE: 1:10

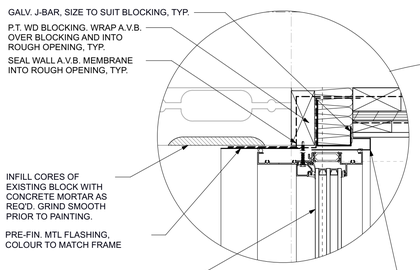

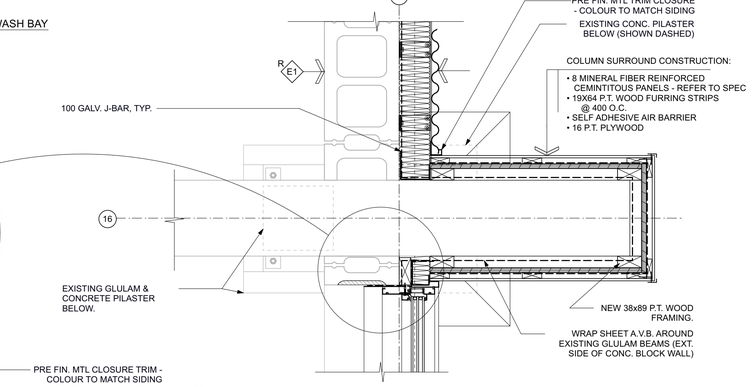

11 A7.2 PLAN DETAIL - ARENA COLUMN SURROUND @ CLERESTORY WINDOW
SCALE: 1:10

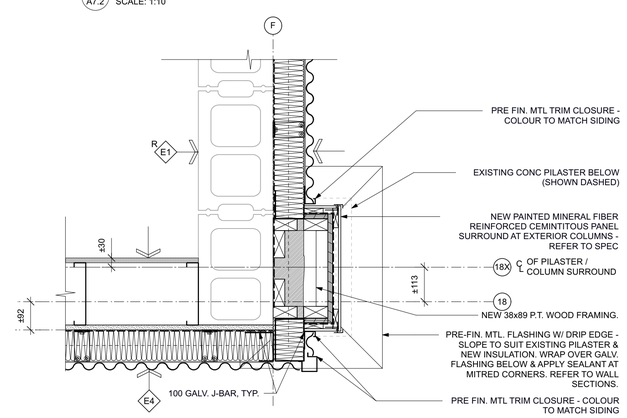

10 A7.2 PLAN DETAIL - ARENA SOUTH CORNER
SCALE: 1:10

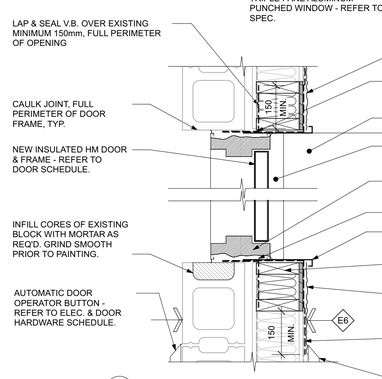

13 A7.2 PLAN DETAIL - DOOR D154B @ WASH BAY
SCALE: 1:10

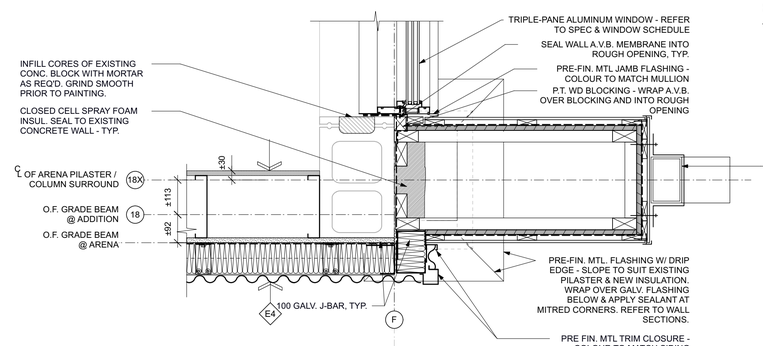

12 A7.2 PLAN DETAIL - ARENA SOUTH CORNER - CLERESTORY WINDOW
SCALE: 1:10

| x | architecture inc.

220 Pion Street, Suite 210 Winnipeg, Manitoba R3C 1A8 204 318 0010

No.	REVISION/DESCRIPTION	BY	DATE

SEAL

MAA Digital Signature Applied

PROVINCE OF MANITOBA
TRAVIS COOKE
REGISTERED ARCHITECT

MAA Digital Signature Applied

PROVINCE OF MANITOBA
1x1 ARCHITECTURE INC.
APPROVED ARCHITECTURAL CORPORATION
No. 1186

DRAWN	CHECKED	DESIGNED	APPROVED
HC	TC	TC/HC	TC
2024-12-18		2024-12-18	

DATE	USER	
2024.12.18	APPROVAL	IC/AF/SS

Winnipeg

THE CITY OF WINNIPEG
ASSETS and PROJECT MANAGEMENT DEPARTMENT
MUNICIPAL ACCOMMODATIONS DIVISION

PROJECT 3-65 GARRY STREET, R3C 4K4

REDEVELOPMENT OF THE OLD EXHIBITION ARENA ISSUED FOR CONSTRUCTION

80 SINCLAIR STREET

SHEET TITLE

PLAN DETAILS

SCALE	PROJECT No:	SHEET No:
AS SHOWN	2020-136	A7.2

DRAWING SHEET SIZE: A1 (841mm x 594mm) PLOT 1:1