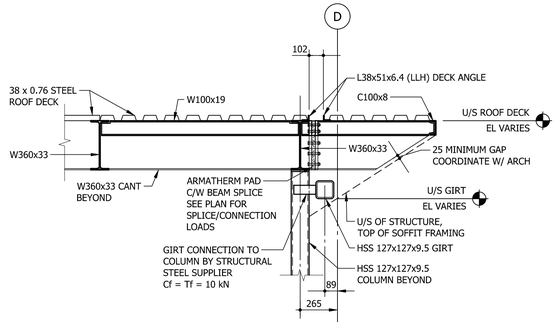

1 SECTION
S2.4 S6.2 1:20

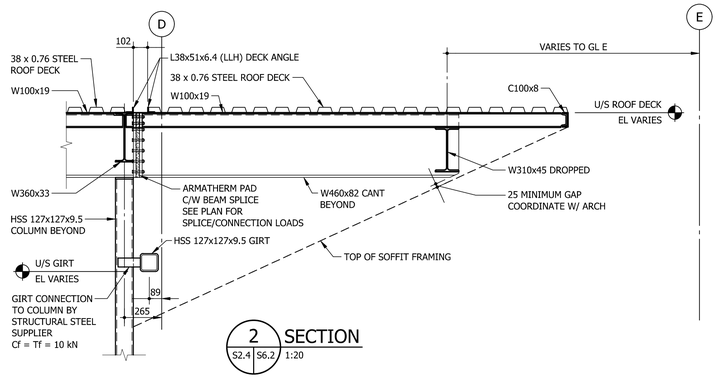

2 SECTION
S2.4 S6.2 1:20

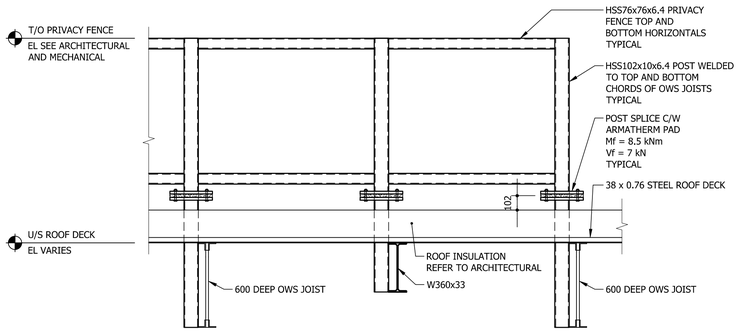

3 SECTION
S2.4 S6.2 1:20

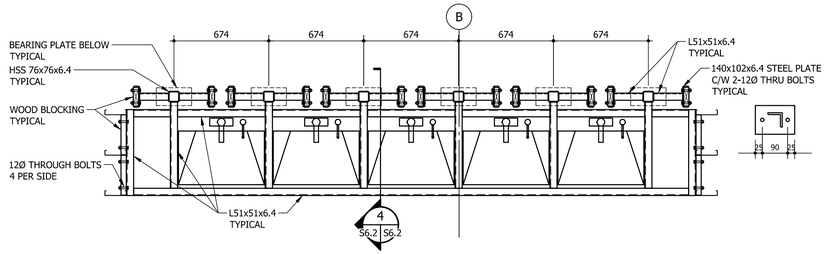

A MULTI-WASHROOM SINK - PLAN DETAIL
S2.2 S6.2 1:20

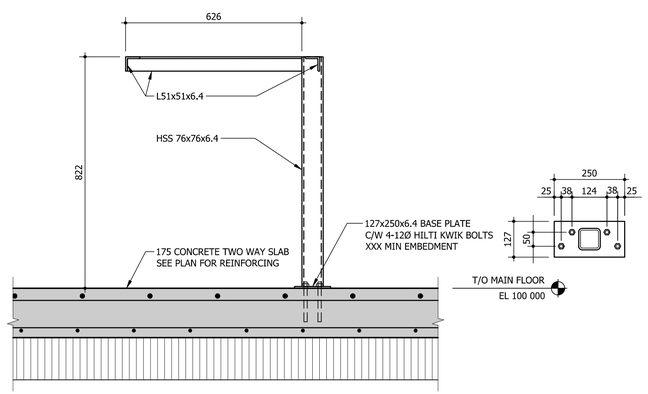

4 SECTION
S6.2 S6.2 1:10

NOTES:

2021-1372

CrosierKilgour
Structural Engineering & Building Performance

No.	REVISION/DESCRIPTION	BY	DATE
0	ISSUED FOR CONSTRUCTION	BCC	12/17

SEAL

PROVINCE OF MANITOBA
CORNELSEN
Member
36369
2024-12-13
REGISTERED PROFESSIONAL ENGINEER

ENGINEERS GEOSCIENTISTS MANITOBA
Certificate of Authorization
Crosier Kilgour & Partners Ltd.
No. 235

DRAWN	CHECKED	DESIGNED	APPROVED
KGT/ERB	BF	BCC	BF
DATE 2024.12.16	USER APPROVAL	CAD	

Winnipeg
THE CITY OF WINNIPEG
ASSETS and PROJECT MANAGEMENT DEPARTMENT
MUNICIPAL ACCOMMODATIONS DIVISION

PROJECT 3-65 GARRY STREET, R3C 4K4

OLD EXHIBITION ARENA
REDEVELOPMENT
ISSUED FOR CONSTRUCTION

80 SINCLAIR STREET

SHEET TITLE

SECTIONS

SCALE	PROJECT No:	SHEET No:
AS SHOWN	2020-136	S6.2

DRAWING SHEET SIZE: A1 (841mm x 594mm) PLOT 1:1

ADDRESS: 80 SINCLAIR STREET PROJECT No: 2020-136 SHEET TITLE: RENOVATION PLAN - S. ARENA DATE: 2024.02.07 FILE NAME: 2020-136V0.dwg\A2.1